LP-8RN, 9RN Type Level Control Valve (for Water)

Level control valve with draining and flow adjusting functions for applications in cold area. Body with cast bronze prevents rust water.

FEATURES

- Suitable for applications in cold area.
- With draining and flow adjusting functions.
- Since the passage to the pilot piping is through bypass line, intermittent water fed by the ball tap and caused by water wave, has no influence on water supply. Quiet and stable water supply is ensured.

SPECIFICATIONS

Model name	LP-8RN		LP-9RN
Code name	LP8RN-F	LP8RN-B	LP9RN-F
Size	20~50(¾″~2″)	65~100(2½″~4″)	
Applicable fluid	Water		
Fluid temperature	1~60℃		
Ambient temperature	−20~60℃		
Applicable pressure	0.03~0.75MPa	0.035~0.75MPa	
Minimum pressure differential across the disc	0.03MPa	0.035MPa	
End connection	Screwed JIS Rc	Flanged JIS 10KFF	
Materials	Body(Cast bronze) Disc & seat (Brass and synthetic rubber)	Body(Cast iron) Disc & seat (Brass and synthetic rubber)	Body(Cast bronze) Disc & seat (Brass and synthetic rubber)
Painting	—	Body inside:Epoxy resin	—
Flow adjusting mechanism	Equipped		
Drain valve	Equipped		
Valve body pressure test	Hydraulic 1.75MPa		
Accessories	Ball tap(Size 20mm), male and female bushing	Ball tap(Size 20mm)	Ball tap(Size 20mm), male and female bushing

∗1. Ball tap is designed for cold district use.
∗2. The accessory for the valve size 20mm is a ball trap only.

DIMENSIONS

(mm)

Size	d	L	G		H	H_1	H_2	A	Cv value	Mass(kg)	
			LP-8RN Type	LP-9RN Type						LP-8RN Type	LP-9RN Type
20(¾″)	¾″	110	44	—	75	103	30	30	5	1.4	—
25(1″)	1″	120	49	—	80	108	30	30	8	1.7	—
32(1¼″)	1¼″	135	54	—	85	113	30	35	11	2.3	—
40(1½″)	1½″	145	58	—	90	118	30	31	16	2.8	—
50(2″)	2″	170	63	—	98	126	30	39	22	4.1	—
65(2½″)	—	270	102	102	125	155	25	26	60	21	19
80(3″)	—	270	106	106	125	155	25	26	70	21	21
100(4″)	—	290	119	116	137	167	25	39	100	29	28

∗ Size 65~100mm: Flange code JIS 10KFF



Size 20~50mm
(LP-8RN Type)



Size 65~100mm
(LP-8RN, 9RN Type)

CONSTRUCTION

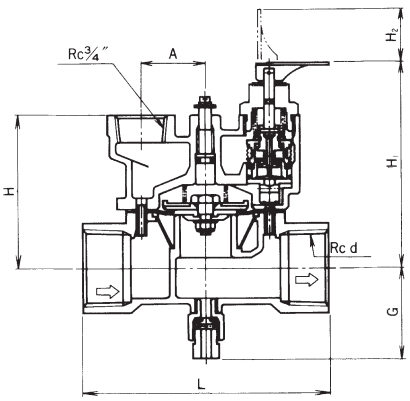

Size 20~50mm (LP-8RN Type)

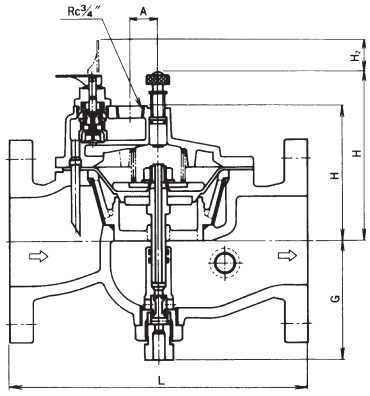

Size 65~100mm (LP-8RN, 9RN Type)

DATA/LP-8N, 9N Type Series Level Control Valve (for Water)

SIZE SELECTION CHART (for Water)

Applicable models: LP-8N,9N
LP-8HN,9HN
LP-8RN,9RN
LP-8AN,8AHN,8ARN

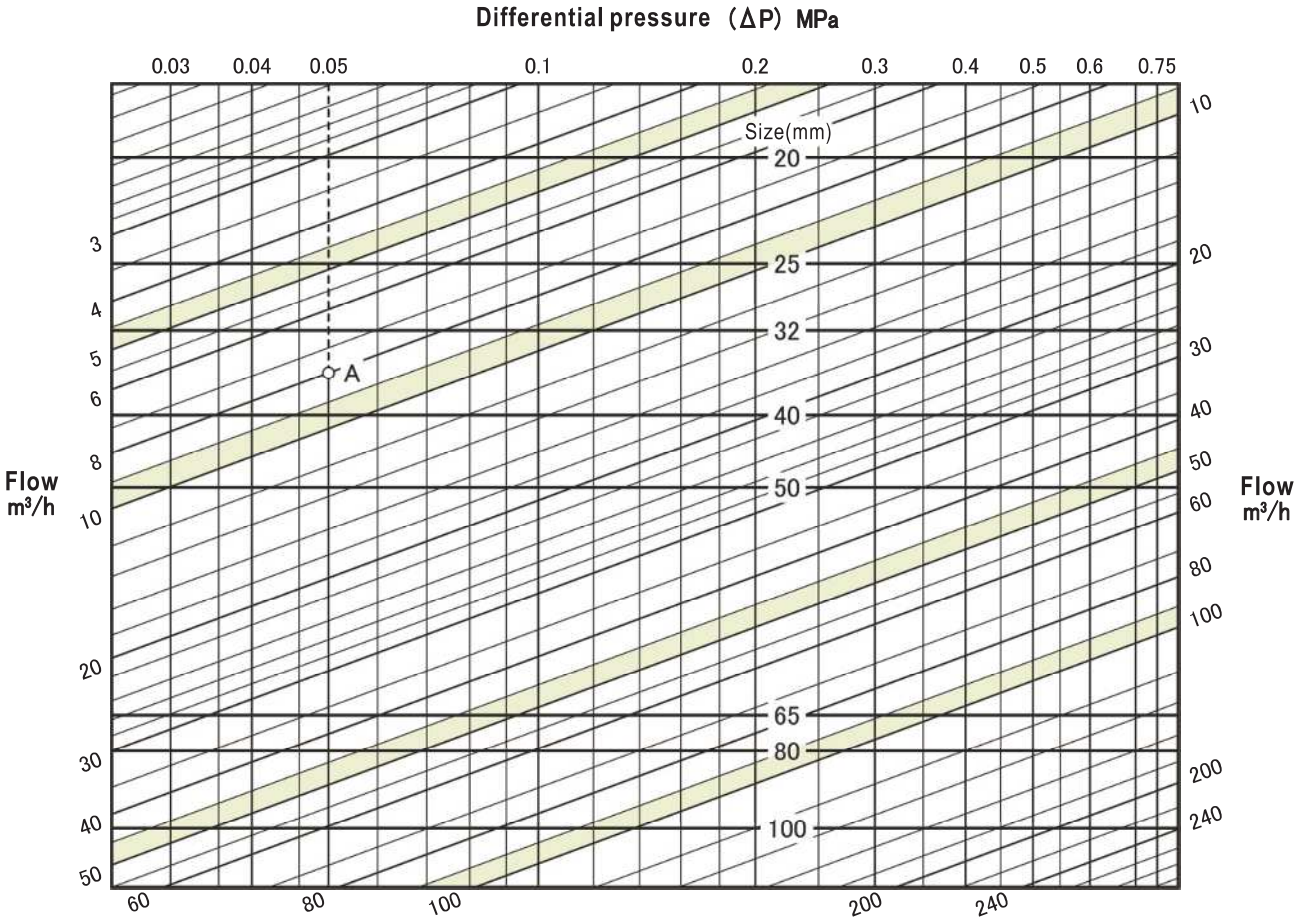

● HOW TO USE THE CHART

Example: determine size for meeting the following conditions.
Water supply pressure: 0.05MPa
Back pressure: 0MPa
Flow: 8m³/h

Differential pressure (ΔP) is 0.05MPa.
The 0.05MPa pressure differential line intersects with the 8m³/h flow curve at point A.

Since point A is between the 32mm and 40mm size lines, the larger one, which is 40mm, is selected.

LEVEL CONTROL VALVE ADJUSTMENT (LP Type series)

VALVE CLOSING TIME

LP-8HN, 8AHN, 9HN

Although valve closing time has been adjusted at factory before delivery, it needs to be adjusted when there is an abnormal situation.

- **Delaying valve closing time**

  Water hammer may occur if the interval between closing of ball tap and closing of level control valve is too short. To delay valve closing, loosen the lock nut and turn the needle valve to the right (clockwise) to reduce the opening degree of needle valve.

- **Shortening valve closing time**

  The closing water level may be too high or overflow may occur if the interval between closing of ball tap and closing of level control valve is too long. To solve such problems, loosen the lock nut and turn the needle valve to the left (counterclockwise) to increase the opening degree of needle valve.

Adjustment of valve closing time and flow

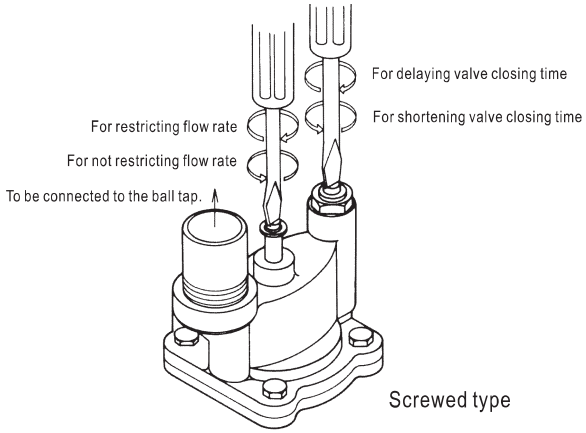

FLOW ADJUSTMENT

LP-8HN, 8AHN, 9HN
LP-8RN, 8ARN, 9RN

The flow of water will be extremely large and there will be excessive vibration and noise if the water pressure or the head drop pressure is excessively large. To solve such problems, turn the adjustment screw to the right (clockwise). By doing this, the stroke of the valve is shortened and the flow amount and velocity are limited (do not close the screw completely).

WATER DRAINING AND RE-FEEDING FOR LEVEL CONTROL VALVE FOR APPLICATIONS IN COLD DISTRICT

DRAINING

① Close the valve controlling water supply to reduce water level of water receiving tank, and then open the ball tap.

② Raise the water draining lever of level control valve (In case of straight type LP-8RN,9RN Type, open water draining tap) to drain water. Close the tap after water is drained completely.

RE-FEEDING (resuming water supply)

Open the water supply valve and start water supply. After 2~3 minutes, check if water is supplied by secondary valve and level control valve, and then pull down the water draining lever to allow normal water supply.

Water draining and re-feeding (resuming water supply)

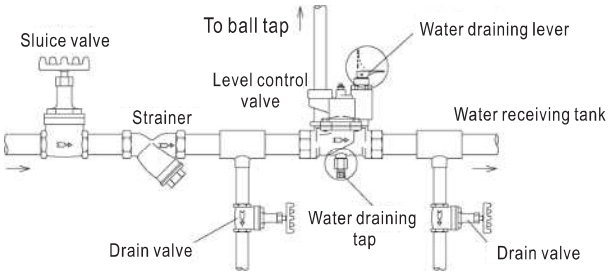

DATA/Level Control Valve

■ PIPING EXAMPLE

Fig.1: Straight type

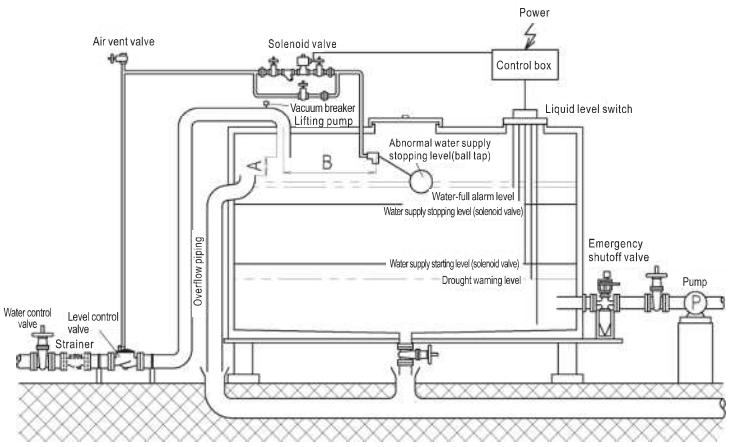

Fig.2: Angular type

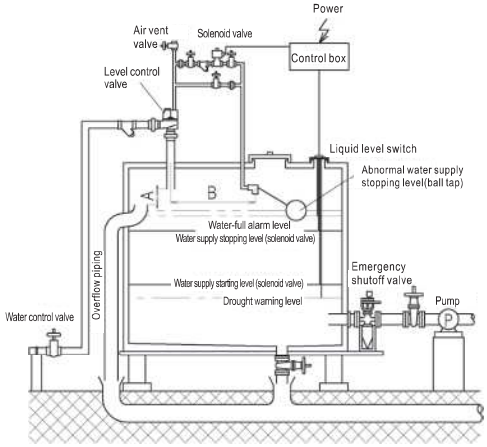

Please note that local governments may have their own regulations on the mounting position and size of level control valve.

■ APPLICATION EXAMPLE

Control based on ball tap and solenoid valve

In this method, level control is realized by opening/closing the main valve through actuation of pilot solenoid valve according to water level detected by level switch.

In the event of abnormal water level due to failure of pilot solenoid valve, the ball tap (which works as a safety device) closes and so does the main valve.

■ INSTALLATION POINT

1. Make sure interval A is minimum “pipe size×1.7 + 5 (mm)”. (The interval should be adjusted according to the area of water receiving tank.)
2. To avoid fluctuation of the float of ball tap, interval B should be as large as possible (at least 1m) or measures are taken to prevent fluctuation.
3. Install water control valve (sluice valve) and strainer at the primary side of level control valve. Although some products have embedded strainer, the mesh of the embedded strainer may not satisfy the needs. Therefore, you may need to install strainer with appropriate mesh.
   ※ Mesh: Japanese regulation of the Land, Infrastructure and Transportation Ministry requires minimum 40 mesh and minimum 80 mesh for the primary side of pilot solenoid respectively.
4. For the secondary piping of level control valve that is very long or has many bents, please install VD-2N Type vacuum breaker (see Page 127) right after the secondary side.
5. Before installing level control valve, please remove foreign matter from the pipeline, flush it completely, and then install the valve on horizontal pipe uprightly.
6. Screw type level control valves with size 20~50mm should be connected to pipe using union joint or flange joint.
7. To allow easy maintenance, install level control valve in the proximity of pilot pipe using union joint and install stop valve between union joint and ball tap.
8. The nominal diameter of pilot pipe should not be smaller than that of the connection port of level control valve.
9. Install ball tap in a place that is near to manhole for easy maintenance.
10. Take measures to prevent freezing or damage of level control valve if it is used in cold area.
11. Depending on the position of water receiving tank, there may be noise due to water flowing from the pipe at the outlet of level control valve. Therefore, if the tank is near to places where people are living, sound insulation measures need to be taken to reduce noise.

PILOT-OPERATING SOLENOID VALVE (to be ordered separately)

During water feeding to tank, pilot type solenoid valve in pilot piping line is possibly uncontrollable due to pressure drops, this select the corrent direct type solenoid valve according to table of suitable solenoid valve.

■ TABLE OF SUITABLE SOLENOID VALVES

○:Good ×:Bad

Level control valve		DS-11N,11LN (Normally closed)	WS-22 (Normally closed)	WS-22C (Normally open)
Model name	Size			
LP-8N,8HN	20~50mm	○	○	○
	65~100mm	×	○	○
LP-8AN, 8AHN	20~50mm	○	○	○
LP-9N, 9HN	65~100mm	×	○	○
WVL-02	80~400mm	×	○	○
LP-8RN,8ARN,9RN Other level control valves		×	○	○

＊For WVL-02 Type above 250mm in size, please use size 25mm product of WS-22, 22C Type.
Please select WS Type if the valve is to be used with level control valve provided by other manufacturers or those for cold region. In the case of application in cold region, please apply sufficient insulation to avoid freezing and damage. However, insulation is not necessary for coil.

DS-11N,11LN Type Solenoid Valve (Normally closed)

■ CONSTRUCTION



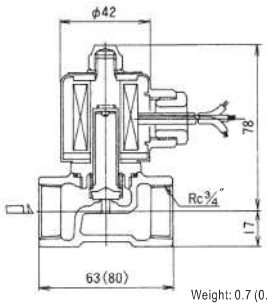

Weight: 0.7 (0.8) kg

Values in parentheses are of DS-11LN Type.
Note: The size and weight are those of size 20mm valve.

■ SPECIFICATIONS

Type	Standard	Installation of pipe end core is possible*1.
Model	DS-11N	DS-11LN
Code name	DS11N-J□	DS11LN-J
	※1or 2 for rated voltage is required in □	–
Size	20 or 15 mm (¾″ or ½″)	
Applicable pressure	0~0.75MPa	
Materials	Body(Cast bronze), Disc & seat(Stainless steel)	
Rated voltage	1: AC100V 50/60Hz 2: AC200V 50/60Hz	AC100V 50/60Hz or AC200V 50/60Hz
Rated current	AC100V:0.19A AC200V:0.10A	
Starting current	AC100V:0.57A AC200V:0.29A	
Protection	Dustproof, drip-proof, for indoor application *2.	
Cv value	0.45	

＊1. DS-11LN Type with pipe end core is available.
＊2. For outdoor application, please use the product with TB-03 Type series terminal box.

WS-22 Type Solenoid Valve (Normally closed)

■ CONSTRUCTION



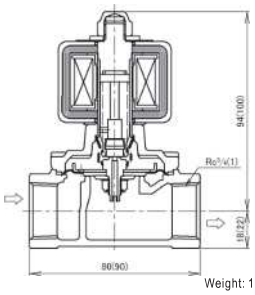

Weight: 1.1kg (1.6)

Note: The number in ( ) is for size 25mm valve.

■ SPECIFICATIONS

Model	WS-22	
Code name	WS22-F	
Size	20(¾″)	25(1″)
Applicable pressure	0~1.0MPa	
Materials	Body(Cast bronze), Disc & seat(Stainless steel and Synthetic rubber)	
Rated voltage	Common use:AC100V 50/60Hz or AC200V 50/60Hz *1.	
Rated current	AC100V:0.21A AC200V:0.10A	
Starting current	AC100V:0.7A AC200V:0.35A	
Protection	Dustproof, drip-proof, for indoor application *2.	
Cv value	7	10

＊1. For special voltage, please contact our agent in your area.
＊2. For outdoor application, please use the product with TB-03 Type series terminal box.

WS-22C Type Solenoid Valve (Normally open)

■ CONSTRUCTION



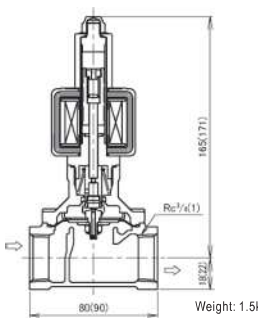

Weight: 1.5kg (2)

Note: The number in ( ) is for size 25mm valve.

■ SPECIFICATIONS

Model	WS-22C	
Code name	WS22C-F	
Size	20(¾″)	25(1″)
Applicable pressure	0~1.0MPa	
Materials	Body(Cast bronze), Disc & seat(Stainless steel and Synthetic rubber)	
Rated voltage	Common use:AC100V 50/60Hz or AC200V 50/60Hz *1.	
Rated current	AC100V:0.35A AC200V:0.18A	
Starting current	AC100V:1.25A AC200V:0.63A	
Protection	Dustproof, drip-proof, for indoor application *2.	
Cv value	7	10

＊1. For special voltage, please contact our agent in your area.
＊2. For outdoor application, please use the product with TB-03 Type series terminal box.

LB-2N Type Pilot Ball tap (Standard accessories)

Standard accessory for level control valve. Pilot ball tap works with level control valve and maintains a fixed level of water in the tank.

※ If level control valve is replaced, the ball tap should also be replaced.



SPECIFICATIONS

Size of main body of level control valve	20~50(¾″~2″)	65~150(2½″~6″)	200(8″)
Model name	LB-2N		
Code name	LB2N-F2	LB2N-F5	LB2N-F6
Applicable fluid	Water		
Fluid temperature	1~60℃		
Applicable pressure	0~0.75MPa		
Materials	Body(Cast bronze), Float(Polyethylene)		
Valve body pressure test	Hydraulic 1.75MPa		

CONSTRUCTION

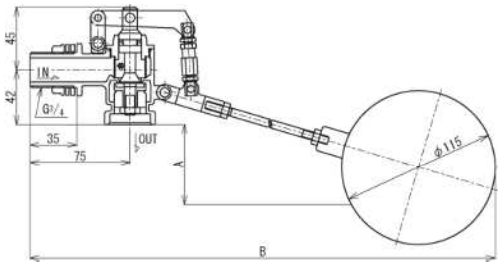

DIMENSIONS

(mm)

Code name	A	B	Mass(kg)
LB2N-F2	110	450±10	1
LB2N-F5	200	500±10	1.05
LB2N-F6	250	450±10	1.05

VD-2N Type Vacuum Breaker (Optional item) for outlet side of Level control valve

The operation of level control valve may become unstable if the outlet side piping is too long or the piping is a vertical piping. To maintain stable operation of the valve, install vacuum breaker on the pipe right after the outlet side of level control valve.

Note: Select VD-5N Type (see Page 128) for indoor piping of water supply or air conditioning system.



CONSTRUCTION

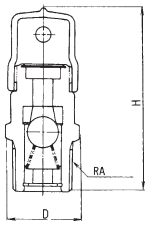

SPECIFICATIONS

Model name	VD-2N
Code name	VD2N-F
Applicable fluid	Water
Fluid temperature	5~60℃
Applicable pressure	Max. 0.75MPa
Opening operation	98.3kPa · A(-3.0kPa) or less
Closing operation	111.3kPa · A(10kPa) or more
Materials	Body(Brass or Cast bronze), Disc(Synthetic rubber), Ball(Polyethylene), Strainer(Stainless steel)

DIMENSIONS

(mm)

Size	A	D	H	Mass(kg)	Applicable size of level control valve
15(½″)	½″	25.4	65	0.1	20~32(¾″~1¼″)
20(¾″)	¾″	32.3	88	0.16	40~50(1½″~2″)
25(1″)	1″	40.4	100	0.29	65(2½″) or bigger

CAPACITY (Air)

(kg/h)

Size	−0.003MPa	−0.006MPa	−0.01MPa
15(½″)	0.94	1.30	1.65
20(¾″)	1.40	1.95	2.50
25(1″)	1.95	2.70	3.40

- Convert kg/h → m^3/h (Standard state) (for reference only)
  Density of air is 1.226kg/m^3 (15℃, 1atm)

$$m^3/h\ (\text{Standard state}) = \frac{\text{Value in above table (kg/h)}}{1.226\ (kg/m^3)}$$