VENN

VENN

PRODUCTS GUIDE

Vol.42

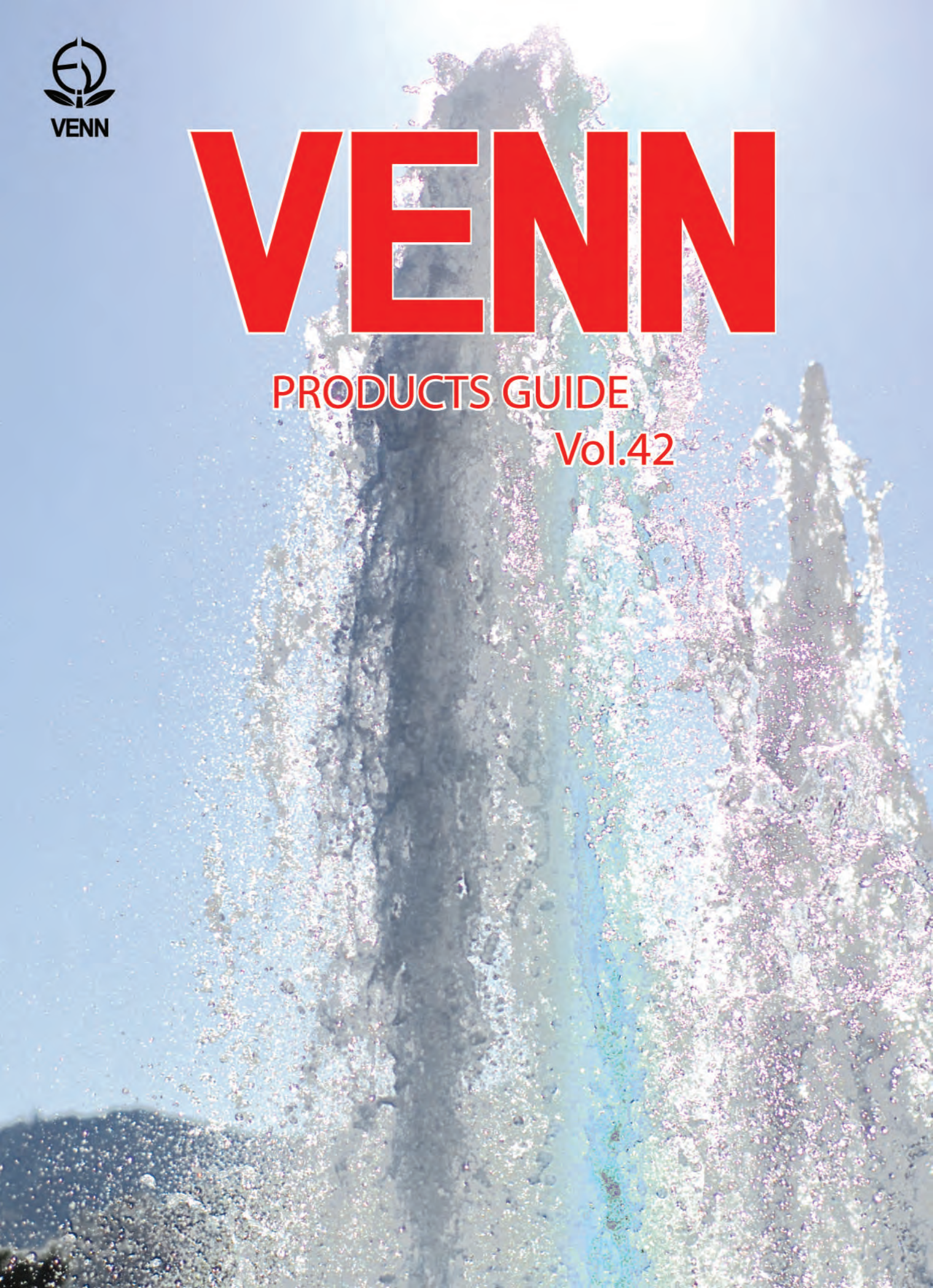

TOTAL INDEX 2

A

STEAM TRAPS
AD-17,17F ····· 148
AD-18,18F ····· 149
AF-11H ····· 157
AF-11HF ····· 158
AF-12 ····· 154
AF-15F ····· 155
AF-16F ····· 156
AF-20F ····· 159
AK-1H ····· 150
AK-2H ····· 151
AK-5,5F ····· 152
AK-16 ····· 158
AT-1A,1S ····· 142
AT-4A,4S ····· 143
AT-6,6F ····· 146
AT-6FB ····· 147
ATB-5,5F ····· 144

AIR TRAP
AK-21 ····· 162

AIR VENT VALVES
AF-4CN,4M,4S ····· 168
AF-5N ····· 169
AF-6N ····· 170
AF-9,9H ····· 172
AF-10,10H ····· 172
AF-17N ····· 171

B

DRAIN SEPARATOR
BA-5 ····· 160

MOTOR VALVES(ball-type)
BM-1S ····· 259
BM-7S ····· 258
BM-9S ····· 257
BM-9SR ····· 257
BM-12S,13S,14S ···· 254
BM-12CR,13CR,14CR ··· 256
BM-12SR,13SR,14SR ··· 255

SILENCER (for steam trap)
BH-1 ····· 147

SIGHT GLASS
BS-1,1A ····· 163
BS-2,2A ····· 163

C

CYLINDER VALVES
CCF,COF-1 ····· 271
CCF,COF-1H ····· 271
CCS,COS-1 ····· 270
CCS,COS-1H ····· 270
CP53-FS ····· 272
CP85-FS ····· 272
CP125-FS ····· 272

D

PILOT SOLENOID VALVES for LEVEL CONTROL VALVES
DS-11N,11LN ····· 126

SOLENOID VALVES
DS-10,10H,12 ····· 232
DS-13,13H,14 ····· 233

E

SOLENOID VALVES
ED-S,F ····· 236

EMERGENCY SHUT-OFF VALVES (SOLENOID TYPE)
EBF,ECF-1P ····· 249
EBF,ECF-1W ····· 248
EBS,ECS-1P ····· 249
EBS,ECS-1W ····· 248
EI-FS,FP ····· 250
EIE-FS,FP ····· 251

F

DIFFERENTIAL PRESSURE-ADJUSTING VALVES (CIRCUIT VALVE)
FD-2H,2W ····· 105

G

H

I

J

BELLOWS TYPE EXPANSION JOINTS
JB-13,14 ····· 174
JB-15,16 ····· 176
JB-17,18 ····· 178
JB-21,22 ····· 175
JB-23,24 ····· 177

SLEEVE TYPE EXPANSION JOINTS
JS-5HF,6HF ····· 182
JS-7HF,8HF ····· 182
JS-5HW,6HW ····· 183
JS-7HW,8HW ····· 183

BALL JOINTS
JU-1 ····· 186
JU-3F,4F ····· 187
JU-3W,4W ····· 187

K

STRAINERS
KT-1,1A,1D ····· 200
KT-1PN,1CN ····· 201
KT-2,2D ····· 202
KT-3,3A ····· 203
KT-4W,4H ····· 204
KT-5,5F ····· 205
KU-1,1CN ····· 207
KU-2,2A ····· 208
KU-3 ····· 209
KU-4 ····· 209
KW-1 ····· 210
KW-2 ····· 211
KY-3 ····· 198
KY-4,4N ····· 194
KY-6,6CN ····· 196
KY-7 ····· 195
KY-8 ····· 197
KY-9 ····· 199
KY-10 ····· 199

L

BALL TAP for LEVEL CONTROL VALVES
LB-2N ····· 127

LEVEL CONTROL VALVES
LP-8AN,8AHN ····· 121
LP-8ARN ····· 121
LP-8N,9N ····· 118
LP-8HN,9HN ····· 119
LP-8RN,9RN ····· 120

M

PRIMARY PRESSURE REGULATING VALVES
MD-1A ····· 112
MD-2P ····· 113
MD-14CN,14H,14W ··· 98
MD-20H,20W ····· 104
MD-22 ····· 115
MD-35F,37F ····· 102

MOTOR VALVES
ML-FD ····· 261
ML-FS ····· 262
ML-FW ····· 263
ML-TS ····· 262

N

O

P

SOLENOID VALVES
PF-16 ····· 226
PF-17 ····· 226
PF-22,22C ····· 221
PF-25,25C ····· 224
PS-16 ····· 226
PS-17 ····· 226
PS-22,22C ····· 220
PS-22K,22CK ····· 228
PS-23,23C ····· 222
PS-25,25C ····· 224
PSE-18,18A ····· 240

Q

NOISELESS HEATERS
QH-1 ····· 136
QH-2 ····· 137
QH-3 ····· 138

R

PRESSURE REDUCING VALVES
RD-3H,3HF ····· 31
RD-3HA,3HAF ····· 31
RD-7 ····· 56
RD-14CN,14H,14W ····· 46
RD-16 ····· 53
RD-17,17A ····· 54
RD-20 ····· 58
RD-20F ····· 58
RD-29A,29B ····· 33
RD-30 ····· 30
RD-31N,31FN ····· 36
RD-32N,32FN ····· 37
RD-33FN ····· 36
RD-34FN ····· 37
RD-35,35F ····· 38
RD-36,36F ····· 38
RD-37,37F ····· 39
RD-38,38F ····· 39
RD-40 ····· 28
RD-41,41F ····· 28
RD-43N ····· 44
RD-44N ····· 43
RD-47N ····· 45

RP-6,6P ····· 12
RP-6A ····· 18
RP-6BD ····· 14
RP-7 ····· 27
RP-8 ····· 13
RP-8A ····· 19
RP-9,10,11 ····· 16
RP-9A,10A,11A ····· 21

S

SAFETY VALVES (FULL BORE TYPE)
SF-1H,2H ····· 78
SF-13,13L ····· 79
SF-14,14L ····· 79
SF-15,15L ····· 80
SF-16,16L ····· 80
SF-17,17L ····· 81
SF-18,18L ····· 81
SF-19,19L ····· 82
SF-20,20L ····· 82
SAFETY VALVES (LIFT TYPE)
SL-7,8 ····· 69
SL-9,10 ····· 70
SL-11,12 ····· 71
SL-23,23H ····· 67
SL-24,24H ····· 67
SL-45,46 ····· 68
SAFETY RELIEF VALVES (LIFT TYPE)
SL-37,37V ····· 62
SL-38,38V ····· 62
SL-39,39V,40,40V ····· 63
SL-39F,39FV,40F,40FV ··· 64
SL-43,43V ····· 66
SL-44,44V ····· 66
RELIEF VALVES
SL-6ED ····· 75
SL-8ED ····· 74
SL-10ED ····· 74
SL-24E ····· 73
SL-38E ····· 72
SL-40E ····· 72
SL-44E ····· 73
SL-46ED ····· 75

T

TERMINAL BOX (for SOLENOID VALVE)
TB-03 ····· 244
TEMPERATURE REGULATING VALVES
TD-2,2L ····· 131
TD-2A,2AL ····· 131
TD-4,4L ····· 134
TD-8 ····· 130
TD-8A ····· 130
TEMPERATURE REGULATING MOTOR VALVES
TBM-8S ····· 266
TEMPERATURE REGULATING SOLENOID VALVES
TPF,TPS-22 ····· 242

U
V

VACUUM BREAKERS
VD-1H ····· 139
VD-2N ····· 127
VD-5N ····· 128
SOLENOID VALVES
VF-13,13C ····· 229
VF-14,14C ····· 229

W

SOLENOID VALVES
WF-22,22C ····· 215
WF-25,25C ····· 218
WS-22,22C ····· 214
WS-22K,22CK ····· 228
WS-23,23C ····· 216
WS-25,25C ····· 218
WSE-18,18A ····· 239
WVE-02 ····· 231
PILOT SOLENOID VALVES for LEVEL CONTROL VALVES
WS-22,22C ····· 126
WATER HAMMER ARRESTOR
WHA-3 ····· 57
PRESSURE REDUCING VALVES
WVR-02,02CN ····· 50
PRIMARY PRESSURE REGULATING VALVES
WVM-02,02CN ····· 99
LEVEL CONTROL VALVES
WVL-02,02CN ····· 123

X
Y

Z
Others

MOTOR VALVES
3BM-1S ····· 260

★ CODE NAME

The code name includes the following:

Product code			
Type	— (Hyphen)	Material code	Spec. Code

For example:

				Model	Spec. Code
RP6	—	B	⇦	RP-6	(B)
WS22	—	F	⇦	WS-22	(F)

- "Type" is basically the same as "Model" code, except that the hyphen in "Model" code is truncated.
- "Material code" represents the material used in making the main body and main parts of the product. This code can be found in the following table.
- "Spec. code" represents structure, pressure type, fluid, inventory identification etc.
  Some products do not have Spec. Code.

☆ For details, see Page 296.

Material code	Material of main body	Material of essential parts	Material of valve disc	Material code	Material of main body	Material of essential parts	Material of valve disc
F	Cast bronze	Cast bronze		M	Ductile cast iron	Stainless steel	
J	Cast bronze	Stainless steel		C	Cast steel	Stainless steel	
W	Cast bronze	Stainless steel	Teflon	T	Cast steel	Stainless steel	Teflon
B	Cast iron	Cast bronze		D	Stainless steel (SCS13)	Stainless steel	
R	Cast iron	Cast bronze	Teflon	V	Stainless steel (SCS13)	Stainless steel	Teflon
H	Cast iron	Cast bronze	Synthetic rubber	K	Stainless steel (SCS14)	Stainless steel (SUS316)	
G	Cast iron	Stainless steel		E	Stainless steel (SCS14)	Stainless steel (SUS316)	Teflon
S	Cast iron	Stainless steel	Teflon	N	Carbon steel	Stainless steel	
L	Ductile cast iron	Cast bronze		P	Resin	Resin	

VENN CO., LTD.

VENN

PRODUCTS GUIDE

VOL. 42

The Beauty of Flow

Everlasting challenge to the beauty of flow, Venn Co., Ltd. provides superior fluid control valves, contributing to society through its "CUSTOMER FIRST" philosophy and powerful integrated skills.





Iwaki Technical Center, with unlimited potential. . .

Venn Co., Ltd. provides the optimum environment for analyzing fluid control technology, conducting research and development as well as offering various customer services such as training,information,technical support,etc.



NET WORK

Main Office



2-13, Tamagawa 2-chome , Ohta-ku,
Tokyo, 146-0095 Japan
TEL:+81-3-3759-0178
CABLE:VENNVALVE
FAX:+81-3-3759-1414

Iwaki Technical Center



Iwate Works





TO THE USERS OF THIS GENERAL CATALOG, "VENN PRODUCTS GUIDE"

MODELS:

In this overall catalog of VENN products, This catalog is designed to help you select the most suitable product type and size. Please contact us if you have queries regarding the contents of this catalog.

INDEX:

VENN products described in this catalog are roughly classified into 15 groups by type. For detailed information on a desired type, look for it on the overall index page or the table of contents by referring to the number on the back cover. The table of contents describes the major specifications for each product. Therefore, first select a product type frorn the table of contents, then refer to the page which describes that product type. If you have any idea of the desired product type, look for the corresponding page which describes it by referring to the corresponding page which describes it by referring to the overall index(in alphabetical order).

SELECTION:

If the most appropriate product type and size are not selected, the equipment using the product may not function satisfactorily. When selecting a product type and size, thoroughly check whether the conditions under which the product will be used to conform to those described for each product, such as the fluid type, pressure, temperature, viscosity, product materials, etc. If you have any queries, please contact us.

⚠ CAUTION

- Select the most suitable product for the application. Otherwise, an accident may result.
- Before operating the product, carefully read the instruction manual. Incorrect product operation may cause failure or accident.
- The contents of this catalog are subject to change without prior notice.

Sagamihara Works





TOTAL INDEX

PRESSURE REDUCING VALVES *(for STEAM AIR and GASES)*

- RP-6,6P ····· 12
- RP-8 ····· 13
- RP-6BD ····· 14
- RP-9,10,11 ····· 16
- RP-6A ····· 18
- RP-8A ····· 19
- RP-9A,10A,11A ····· 21
- Data (RP Type Pressure Reducing Valve) ····· 24
- RP-7 ····· 27
- RD-40,41,41F ····· 28
- RD-30 ····· 30
- RD-3H series ····· 31
- RD-29A,29B ····· 33

PRESSURE REDUCING VALVES *(for WATER and LIQUIDS)*

- RD-31N~33FN ····· 36
- RD32N~34FN ····· 37
- RD-35,35F ····· 38
- RD-36,36F ····· 38
- RD-37~38F ····· 39
- RD-44N ····· 43
- RD-43N ····· 44
- RD-47N ····· 45
- RD-14 series ····· 46
- WVR-02,02CN ····· 50
- RD-16 ····· 53
- RD-17,17A ····· 54

SAFETY VALVE、RELIEF VALVES

- SL-37,37V,38,38V ····· 62
- SL-39,39V,40,40V ····· 63
- SL-39F,39FV,40F,40FV ····· 64
- SL-43,43V,44,44V ····· 66
- SL-23H, 24H ····· 67
- SL-45,46 ····· 68
- SL-7,8 ····· 69
- SL-9,10 ····· 70
- SL-11,12 ····· 71
- Type E Relief Valve ····· 72
- Type ED Relief Val ····· 74,75
- SF-1H,2H ····· 78

PRIMARY PRESSURE REGULATING VALVES

- Types of Circuit Valve ····· 106
- Data of Circuit Valve ····· 107
- MD-14W,14H ····· 98
- MD-35F,37F ····· 102
- MD-20W,20H ····· 104
- FD-2W,2H ····· 105

PRIMARY PRESSURE ADJUSTING VALVES

- WVM-02,02CN ····· 99
- MD-1A ····· 112
- MD-2P ····· 113

LEVEL CONTROL VALVES

- LP-8N,9N ····· 118
- LP-8HN,9HN ····· 119
- LP-8RN,9RN ····· 120
- LP-8AN,8AHN,8ARN ····· 121
- WVL-02,02CN ····· 123
- Data of Water Level Regulating Valve ····· 125

VACUUM BREAKER

- VD-2N ····· 127
- VD-5N ····· 128

TEMPERATURE REGULATING VALVES

- TD-8 Series ····· 130
- TD-2 Series ····· 131
- Data (Type TD) ····· 132
- TD-4,4L ····· 134

NOISELESS HEATERS

- QH-1 ····· 136
- QH-2 ····· 137
- QH-3 ····· 138

VACUUM BREAKER

- VD-1H ····· 139

STEAM TRAPS

- AT-1A,1S ····· 142
- AT-4A,4S ····· 143
- ATB-5,5F ····· 144
- AT-6,6F ····· 146
- AT-6FB ····· 147
- AD-17,17F ····· 148
- AD-18,18F ····· 149
- AK-1H ····· 150
- AK-2H ····· 151
- AK-5,5F ····· 152
- AK-16 ····· 153
- AF-11H ····· 157
- AF-11HF ····· 158
- AF-12 ····· 154
- AF-15F ····· 155

AIR VENT VALVES

- AF-4 Series ····· 168
- AF-5N ····· 169
- AF-6N ····· 170
- AF-17N ····· 171
- AF-9, 10 Series ····· 172

EXPANSION JOINTS

(Bellows Type)

- JB-13,14 ····· 174
- JB-21,22 ····· 175
- JB-15,16 ····· 176
- JB-23,24 ····· 177
- JB-17,18 ····· 178
- Data: (Model JB) ····· 179

(Sleeve Type)

- JS-5HF~8HF ····· 182
- JS-5HW~8HW ····· 183
- Data: (Model JS) ····· 184

STRAINER

- KY-4,4N ····· 194
- KY-7 ····· 195
- KY-6,6CN ····· 196
- KY-8 ····· 197
- KY-3 ····· 198
- KY-9,10 ····· 199
- KT-1,1A,1D ····· 200
- KT-1PN,1CN ····· 201
- KT-2,2D ····· 202
- KT-3,3A ····· 203
- KT-4W,4H ····· 204
- KT-5,5F ····· 205

SOLENOID VALVES

- DS-10,10H,12 ····· 221
- DS-13,13H,14 ····· 223
- WS-22,22C ····· 214
- WF-22,22C ····· 215
- WS-23,23C ····· 216
- WS-25,25C ····· 218
- WF-25,25C ····· 218
- PS-22,22C ····· 220
- PF-22,22C ····· 221
- PS-23,23C ····· 222
- PS-25,25C ····· 224
- PF-25,25C ····· 224
- PS-16,17 ····· 226
- PF-16,17 ····· 226
- WS-22K,22CK ····· 228
- PS-22K,22CK ····· 228
- VF-13,13C ····· 229
- VF-14,14C ····· 229

EMERGENCY SHUT-OFF VALVES

- EBS/ECS/1W ····· 248
- EBF/ECF-1W ····· 248
- EBS/ECS-1P ····· 249
- EBF/ECF-1P ····· 249
- EI-FS,FP ····· 250
- EIE-FS,FP ····· 251

MOTOR VALVES

- BM-12S,13S,14S ····· 254
- BM-12SR,13SR,14SR ····· 255
- BM-12CR,13CR,14CR ····· 256
- BM-9,9SR ····· 257
- BM-7S ····· 258
- BM-1S ····· 259
- 3BM-1S ····· 260
- Data: (Model BM) ····· 268
- ML-FD ····· 261

CYLINDER VALVES

- COS/CCS-1,1H ····· 270
- COF/CCF-1,1H ····· 271
- CP-FS ····· 272

REFERENCE DATA

- Units Conversion Table ···· 274
- SI Unit Conversion Table ··· 276
- Saturated Steam Table ···· 278
- Physical Property of Gas and Liquid ····· 279
- Viscosity of Liquid ····· 280
- Pressure Rating for Ferrous Material Pipe Flanges ··· 281
- Pressure Rating for Copper Alloy Material Pipe Flanges ··· 284
- Data for Sizing ····· 285
- Velocity in Pipes ····· 289
- Water Head Loss of Pipe Line ····· 291
- Accumulated Drain at Steam Pipe Line ··· 292

- ●RD-31N,31FN,33FN ····· 36
- ●RD-35,35F ····· 38
- ●RD-37,37F ····· 39
- ●RD-14W ····· 46
- ●RD-20,20F ····· 58

WATER HAMMER ARRESTOR

- ●RD-7 ····· 56
- ●RD-20,20F ····· 58
- ●WHA-3 ····· 57

- ●SF-13,13L,14,14L ····· 79
- ●SF-15,15L,16,16L ····· 80
- ●SF-17,17L,18,18L ····· 81
- ●SF-19,19L,20,20L ····· 82
- ●Data ····· 83
- ●Blowing Capacity Table ····· 93

- ●MD-22 ····· 115

- ●AF-16F ····· 156
- ●AF-20F ····· 159

DRAIN SEPARATOR

- ●BA-5 ····· 160

SILENCER*(for steam trap)*

- ●BH-1 ····· 145

AIR TRAP

- ●AK-21 ····· 162

SIGHT GLASS

- ●BS-1,1A,2,2A ···· 163

BALL JOINT

- ●JU-1 ····· 186
- ●JU-3F~4F ····· 187
- ●JU-3W~4W ····· 187
- ●Data: (Model JU) ····· 188

- ●KU-1,1CN ····· 207
- ●KU-2,2A ····· 208
- ●KU-3,4 ····· 209
- ●KW-1 ····· 210
- ●KW-2 ····· 211

- ●WVE-02 ····· 231
- ●ED-S,F ····· 236
- ●WSE-18,18 A ····· 239
- ●PSE-18,18 A ····· 240
- ●Data: (Solenoid Valve) ····· 245
- ●TPS/TPF-22 ····· 242

- ●ML-TS,FS ····· 262
- ●ML-FW ····· 263
- ●Data: (Model ML) ····· 264
- ●TBM-8S ····· 266

- ●Carbon Steel Pipes for Ordinary Piping and Pressure Service ····· 293
- ●Anti-Corrosion Material List/Materials For Critical Part ····· 294
- ●Code Name ····· 296

PRESSURE REDUCING VALVES *for Steam for Air and Gases* 1

PRESSURE REDUCING VALVES *for Water and Liquids*
WATER HAMMER ARRESTOR 2

SAFETY VALVES, RELIEF VALVES 3

CIRCUIT VALVES
PRIMARY PRESSURE REGULATING VALVES 4

LEVEL CONTROL VALVES
VACUUM BREAKER 5

TEMPERATURE REGULATING VALVES 6

NOISELESS HEATERS
VACUUM BREAKER 7

STEAM TRAPS ***AIR TRAP***
DRAIN SEPARATOR ***SIGHT GLASS***
SILENCER *for Steam Trap* 8

AIR VENT VALVES 9

EXPANSION JOINTS
BALL JOINTS 10

STRAINERS 11

SOLENOID VALVES 12

EMERGENCY SHUT-OFF VALVES 13

MOTOR VALVES 14

CYLINDER VALVES 15

REFERENCE DATA 16

Latest technology for meeting the needs of the time

Buildings, Housings and Factories. . . etc.

Boiler equipment
Heat exchanger equipment



Steam boiler

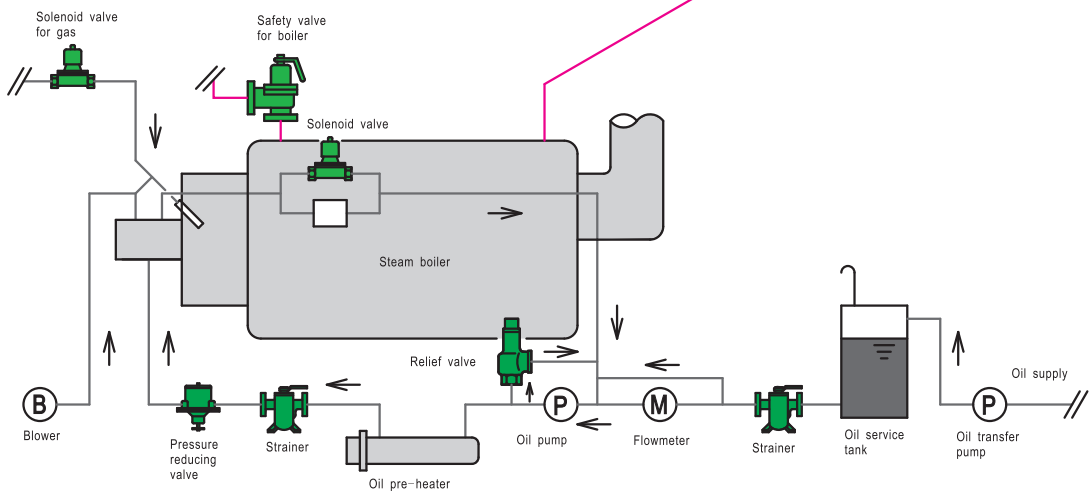

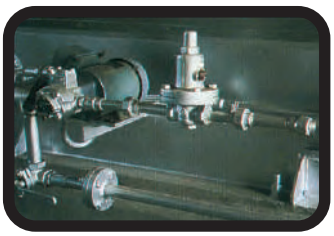

Pressure reducing valve for oil



Pressure reducing valve for steam



Air vent valve

Water supply equipment
Hot water supply equipment
(For apartment houses)

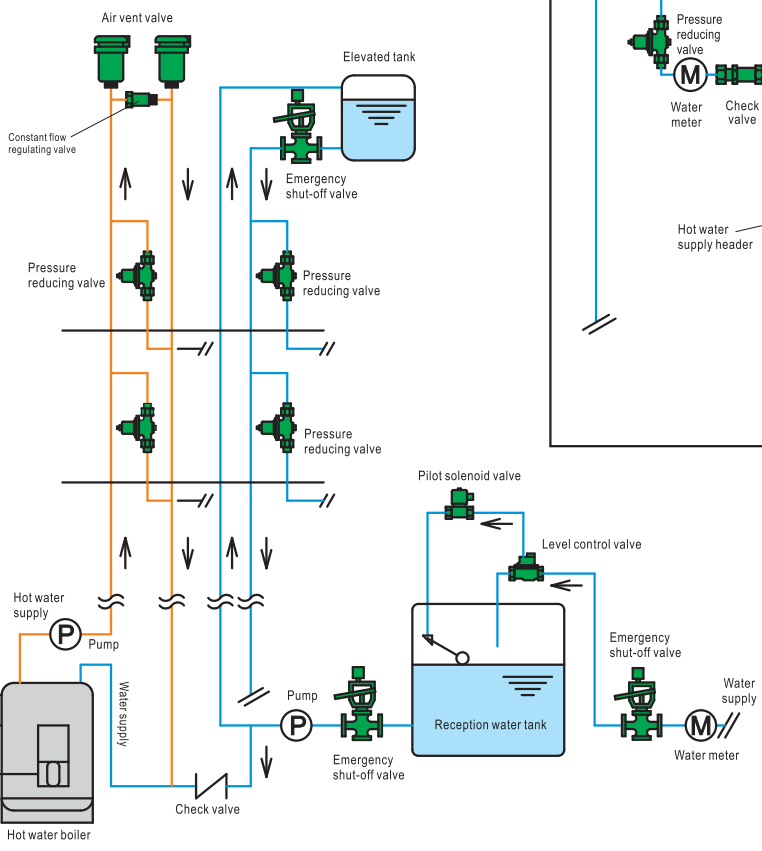



Pressure reducing valve for water

Water supply equipment
Hot water supply equipment
(For individual house)

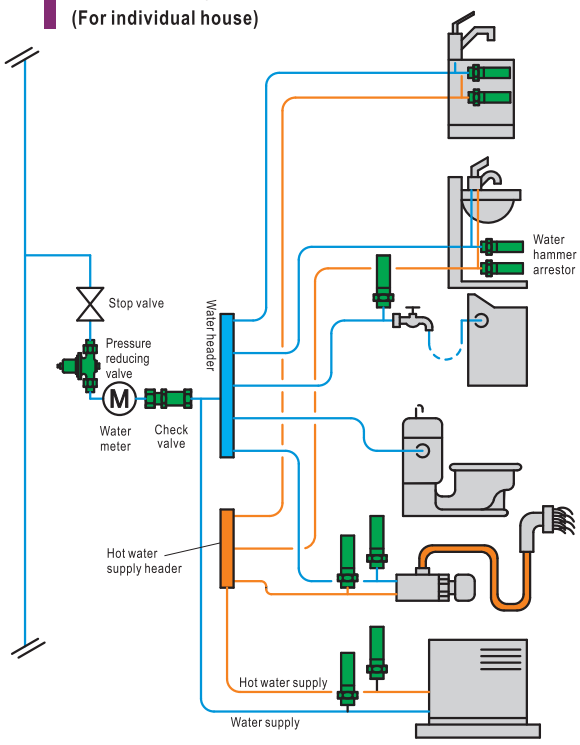



Emergency shut-off valve

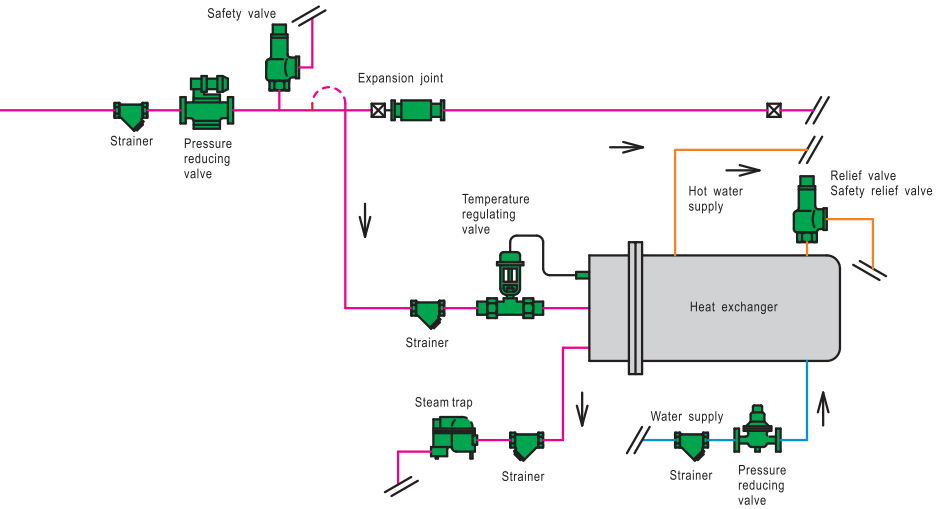



Heat exchanger

Air conditioning equipment

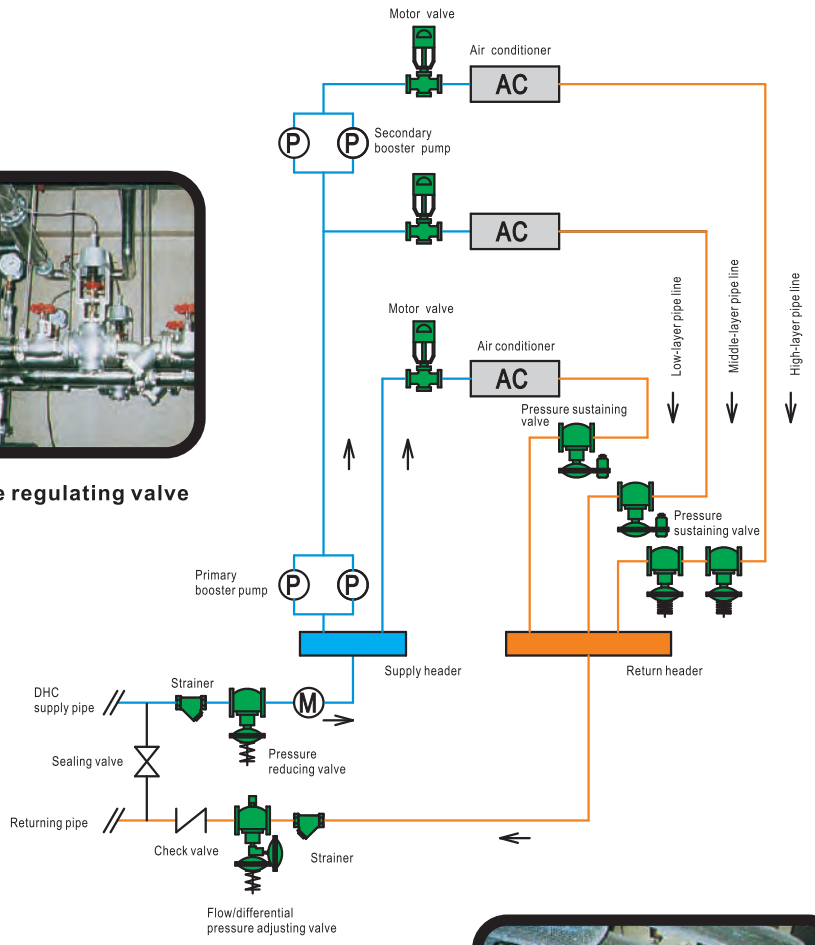

Indoor fire hydrant equipment
Sprinkler equipment

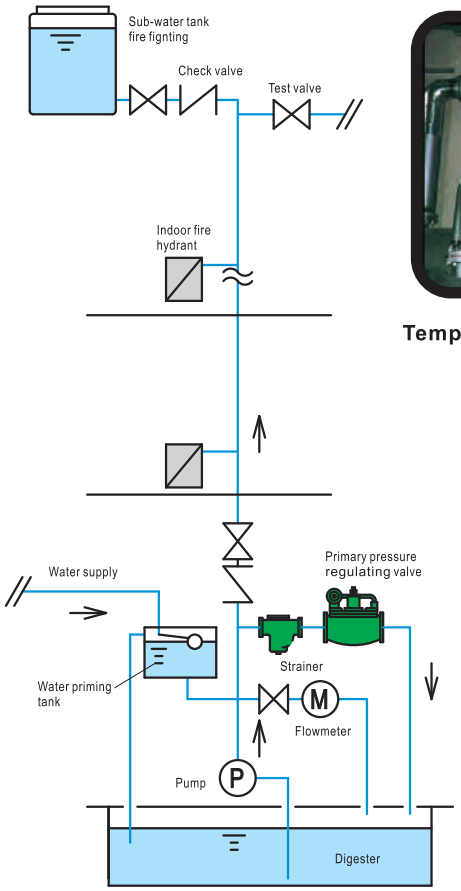

Temperature regulating valve

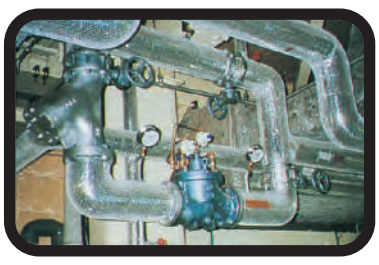

Pressure sustaining valve



Primary pressure regulating valve

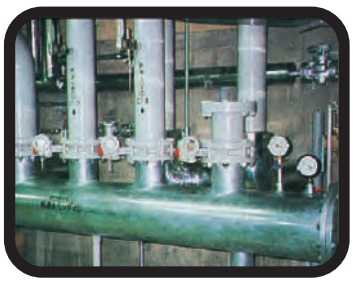

Supply or return header

1 PRESSURE REDUCING VALVES [FOR STEAM, AIR OR GASES]

VENN pressure reducing valves are manufactured based on our years of experience in this industry and advanced technology. The extensive lineup of our products can meet the needs of liquid or pressure applications in construction, factory, and a variety of other areas. Please consider the conditions of using and selecting the most suitable model.

Model name	Size	Applicable fluid	Applicable pressure(MPa)		Materials		Page
			Primary side	Secondary side	Body	Disc & seat	
RP-6	15~200(½″~8″)	Steam	Max. 1.0	0.03~0.8	Cast iron	Stainless steel	12
RP-6P	15~80(½″~3″)						
RP-8	20~80(¾″~3″)	Steam	Max. 1.0	0.03~0.8	Stainless steel	Stainless steel	13
RP-6BD	15~50(½″~2″)	Steam	Max. 1.0	0.03~0.8	Cast iron	Stainless steel	14
RP-9	15~150(½″~6″)	Steam	Max. 2.0	0.03~0.8	Ductile cast iron	Stainless steel	16
RP-10	15~150(½″~6″)		Max. 3.0		Cast steel		
RP-11	15~150(½″~6″)				Stainless steel		
RP-6A	15~200(½″~8″)	Air or gases	Max. 1.0	0.03~0.8	Cast iron	Brass or stainless steel	18
RP-8A	20~80(¾″~3″)	Air or gases	Max. 1.0	0.03~0.8	Stainless steel	Stainless steel	19
RP-9A	15~150(½″~6″)	Air or gases	Max. 2.0	0.03~0.8	Ductile cast iron	Brass or stainless steel	21
RP-10A	15~150(½″~6″)		Max. 3.0		Cast steel		
RP-11A	15~150(½″~6″)				Stainless steel	Stainless steel	
RP-7	15~25(½″~1″)	Steam	Max. 1.6	0.03~0.8	Cast bronze	Stainless steel	27
RD-30	15~40(½″~1½″)	Steam	Max. 1.0	0.02~0.4	Cast iron	Stainless steel	30
RD-29A	15~50(½″~2″)	Air or N_2 gas	Max. 0.3	1~3kPa	Cast iron	Stainless steel	33
RD-29B		Coke oven gas					

RP-6,6P Type Pressure Reducing Valve (for Steam)

for Building Facilities Industrial Facilities, etc.,Multipurpose Pilot-operated Type (High capacity)

This is a pilot operated type pressure reducing valve.It is suitable to install in the steam lines with the high capacity of flow, such as industrial production facility and building facility. This model is designed to ensure the perfect performance in various different conditions of the facility, with your easy handling and installation by the light weighted, compact valve body.

Refer to Page 15 for valve size selection chart.



RP-6 Type
(Size 15~80mm)

■ CONSTRUCTION

RP-6PType: Adjusting screw

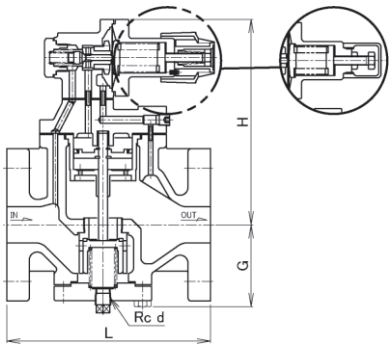

Size 15~80mm

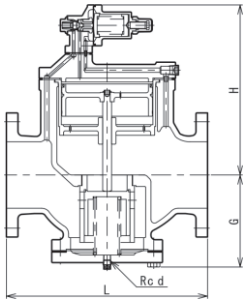

RP-6 Type
(Size 100~200mm)

■ FEATURES

- It is performed and controlled constantly by adopting piston guide construction and special seal ring.
- Possible to install in a line for wide range of pressure and capacity.
- Easy pressure adjustment by manual handle with automatic lock mechanism. (Size 15~80mm)
- Compact design.

■ SPECIFICATIONS

Type		Manual handle type (size 15~80mm) Screw-adjusting type (size 100~200mm)		Screw-adjusting type	
Model name		RP-6		RP-6P	
Code name		**RP6-B**	**RP6-G**	**RP6P-B**	**RP6P-G**
Size		15~200(½″~8″)		15~80(½″~3″)	
Applicable fluid		Steam			
Fluid temperature		Max. 184℃*1			
Applicable primary pressure		Max. 1.0MPa			
Adjustable secondary pressure		0.03~0.8MPa			
Maximum reducing rate		20 : 1			
Minimum pressure differential acrossthe disc		Size 15~80mm : 0.05MPa, Size 100~200mm : 0.07MPa			
Lock up pressure		Max. 0.02MPa			
Offset pressure	**Size 15~80mm**	Within 0.02MPa(Adjustable secondary pressure 0.03~0.035MPa) Within 0.03MPa(Adjustable secondary pressure over 0.035~0.07MPa) Within 0.05MPa(Adjustable secondary pressure over 0.07~0.8MPa)			
	Size 100~200mm	Within 0.05MPa			
Leakage allowance		Less than 0.05% of rated flow			
End connection		Flanged JIS 10KFF			
Materials	**Body**	Cast iron			
	Disc&seat	Stainless steel			
	Piston&cylinder	**Cast bronze**	**Stainless steel**	**Cast bronze**	**Stainless steel**
Valve body pressure test		Hydraulic 1.5MPa			

*1. Applicable temperature Max. 220℃ is available upon your request.
*2. Insulating jacket is available.
*3. When multiple once-through boilers are operated, the primary pressure of pressure-reducing valve may change significantly. Please contact our agent in your area if this is the case of your application.
*4. Please contact our agent in your area if the product is used for purposes with high frequency of operation (such as a styrofoam molding machine).

■ DIMENSIONS

(mm)

Size	L	G	H	d	Cv value	Mass(kg)
15(½″)	140	62	155	¼″	1	7.5
20(¾″)	140	62	155	¼″	2.5	7.5
25(1″)	150	67	160	¼″	4	9
32(1¼″)	180	73	182	⅜″	6.5	12
40(1½″)	180	73	182	⅜″	9	12.5
50(2″)	200	86	187	⅜″	16	15.5
65(2½″)	230	94	202	⅜″	25	20.5
80(3″)	260	110	221	⅜″	36	26.5
100(4″)	320	139	285	⅜″	64	52
125(5″)	380	187	320	⅜″	100	82
150(6″)	420	206	368	⅜″	144	110
200(8″)	540	255	425	⅜″	256	176

Flange code JIS 10KFF

■ REFERENCE

When the existing RP-1H Type pressure reducing valve is replaced with the RP-6 Type due to changes in operating conditions, the same face-to-face dimension can be attained by the use of face-to-face dimension adjustment spacers.(Size 15~80mm)
For more details, please contact our agent in your area.

RP-8 Type Pressure Reducing Valve (for Steam)

for Food Processing Manufacturing Sterilizing Equipments, etc., General Purpose (Large capacity) Pilot Valve

The body and disc & seat of RP-8 Type pressure reducing valve are made of stainless steel. This ensures clean supply of fluid, thus is ideal for application on food processing, sterilizing equipments. In addition, the corrosion resistance and durability of stainless steel also allow extensive applications in other areas.

Refer to Page 15 for valve size selection chart.



FEATURES

- Piston guide and special seal ring allow stable control.
- Wide range of pressure and flow for a variety of applications.
- Easy pressure adjustment by manual handle with automatic lock mechanism.
- Compact design.

SPECIFICATIONS

Model name	RP-8
Code name	RP8-D
Applicable fluid	Steam
Fluid temperature	Max. 200℃
Applicable primary pressure	Max. 1.0MPa
Adjustable secondary pressure	0.03~0.8MPa
Maximum reducing rate	20 : 1
Minimumressure differential across the disc	0.05MPa
Lock up pressure	Max. 0.02MPa
Offset pressure	Within 0.02MPa (Adjustable secondary pressure 0.03~0.035MPa) Within 0.03MPa (Adjustable secondary pressure over 0.035~0.07MPa) Within 0.05MPa (Adjustable secondary pressure over 0.07~0.8MPa)
Leakage allowance	Less than 0.05% of rated flow
End connection	Flanged JIS 10KFF
Materials	Body(Stainless steel), Disc & seat(Stainless steel), Diaphragm(Stainless steel)
Valve body pressure test	Hydraulic 1.5MPa

*For size 15mm, select RD-41 or RD-41F Type. For size 100~150mm and for pressure 3.0MPa, select RP-11 Type.

DIMENSIONS

(mm)

Size	L	G	H	Cv value	Mass(kg)
20(¾″)	140	71	159	2.5	8
25(1″)	150	71	164	4	9
32(1¼″)	180	90	182	6.5	12.5
40(1½″)	180	90	182	9	12.5
50(2″)	200	100	187	16	16
65(2½″)	230	110	202	25	22
80(3″)	260	118	221	36	27.5

Flange code JIS 10KFF

CONSTRUCTION

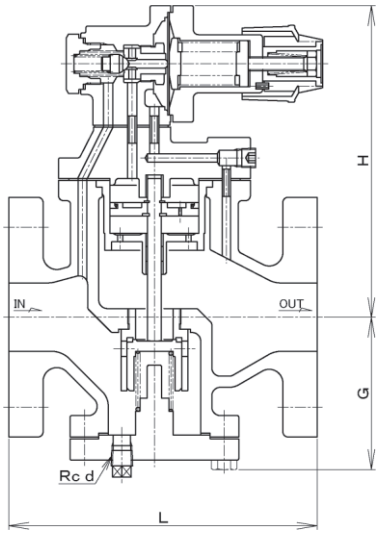

Size	d
20~50	¼″
65 · 80	⅜″

RP-6BD Type Steam Trap with Pressure Reducing Valve (for Steam)

for Construction Factory Equipments, etc., General Purpose Valve(Large capacity)

RP-6 Type with steam trap embedded. It is an ideal product for preventing drain flowing after the valve and application in locations such as vertical piping where drain can be easily accumulated.

Refer to Page 15 for valve size selection chart.

FEATURES

- The position of the drain hole can be changed at an interval of 90°, thus allows appropriate piping suiting locations.
- Piston guide and special seal ring allow stable control.
- Wide range of pressure and flow for a variety of applications.
- Easy pressure adjustment by manual handle with automatic lock mechanism.
- Compact design.

SPECIFICATIONS

Model name		RP-6BD	
Code name		RP6BD-B	RP6BD-G
Applicable fluid		Steam	
Fluid temperature		Max. 1.0MPa	
Applicable primary pressure		Max. 184℃*	
Adjustable secondary pressure		0.03~0.8MPa	
Maximum reducing rate		20 : 1	
Minimum pressure differential acrossthe disc		0.05MPa	
Lock up pressure		Max. 0.02MPa	
Offset pressure		Within 0.02MPa(Adjustable secondary pressure 0.03~0.035MPa) Within 0.03MPa(Adjustable secondary pressure over 0.035~0.07MPa) Within 0.05MPa(Adjustable secondary pressure over 0.07~0.8MPa)	
Leakage allowance		Less than 0.05% of rated flow	
Allowed back pressure trap part		Within 70% of pressure on inlet side	
End connection		Flanged JIS 10KFF	
Materials	Body	Cast iron	
	Disc&seat	Stainless steel	
	Piston&cylinder	Cast bronze	Stainless steel
Valve body pressure test		Hydraulic 1.5MPa	

*Applicable temperature Max. 220℃ is available upon your request.



DIMENSIONS

(mm)

Size	L	G	H	H1	d	Cv value	Mass (kg)
15(½″)	140	134	155	72	½″	1	10
20(¾″)	140	134	155	72	½″	2.5	10
25(1″)	150	139	160	77	½″	4	11.5
32(1¼″)	180	145	182	88	¾″	6.5	14.5
40(1½″)	180	145	182	88	¾″	9	15
50(2″)	200	166	187	98	¾″	16	18.5

Flange code JIS 10KFF

DRAIN DISCHARGE AMOUNT (MAX. CONTINUAL DISCHARGE AMOUNT)

(L/h)

Pressure differentail (MPa)	0.05	0.1	0.2	0.3	0.4	0.6	0.8	1.0
Discharge amount	100	160	260	340	400	500	550	590

CONSTRUCTION

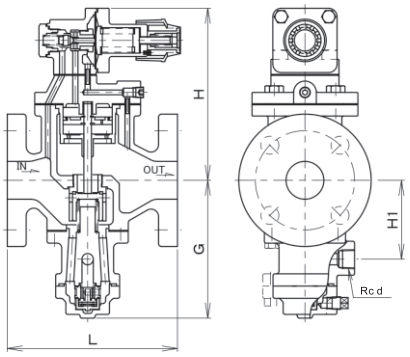

REFERENCE

1. We also provide spacers for adjustment of face to face dimension. Such spacers are useful when replacing VENN RP-1H Type with RP-6BD Type valve, such as in the case of modification of equipment. Please contact our agent in your area for details.
2. It is also possible that you attach trap (BD-2 Type) to RP-6 Type valve that is in use. For more details,please contact our agent in your area.

NOMINAL DIAMETER SELECTION CHART (for Steam)

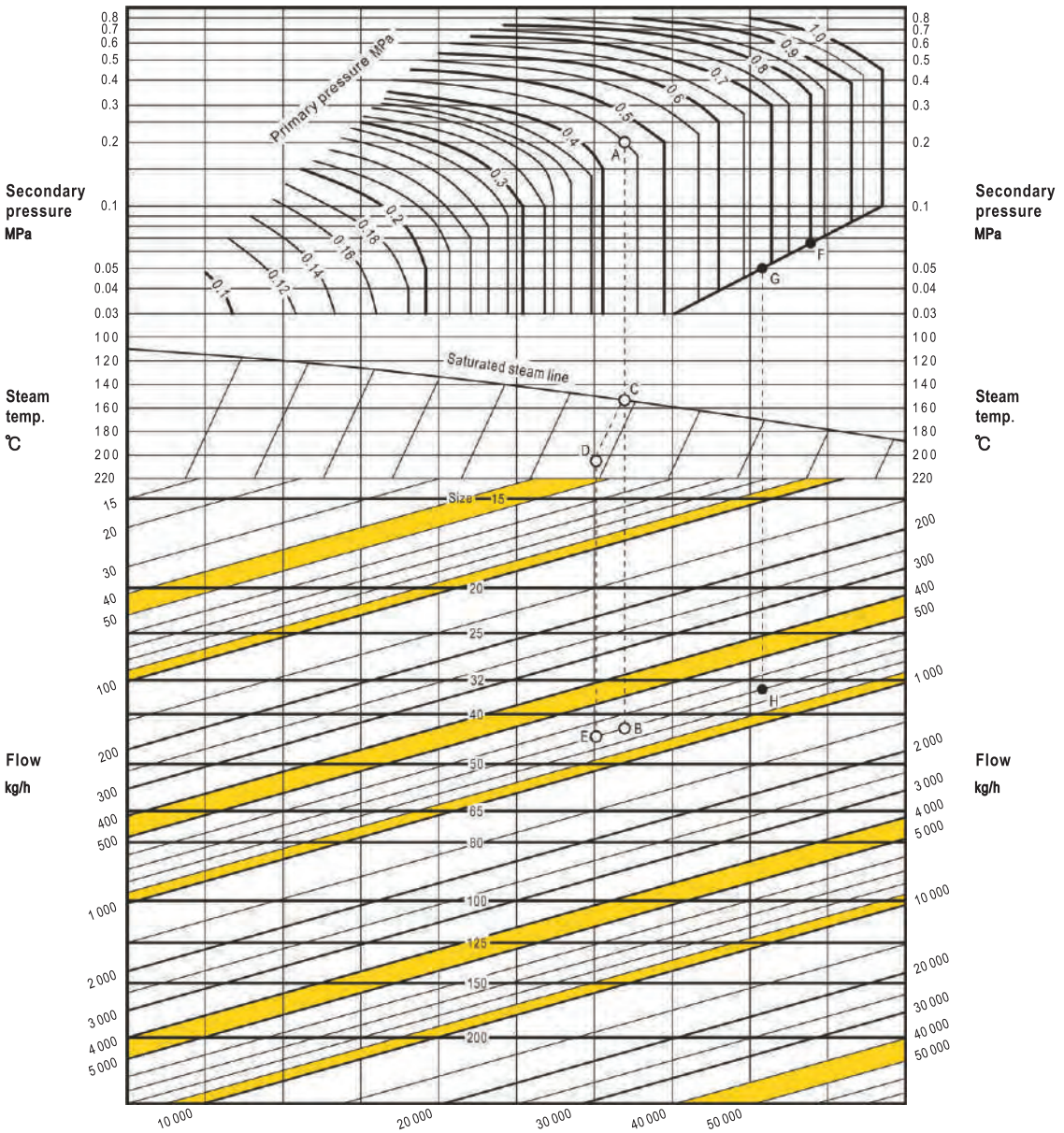

● HOW TO USE THE CHART

Example1:

This example shows you how to decide nominal diameter of valve at the following conditions: primary pressure 0.45MPa, secondary pressure 0.2MPa, flow of saturated steam 700 kg/h.

First, find out the intersection point A of primary pressure curve 0.45MPa and secondary pressure curve 0.2MPa.

Draw a vertical line from point A. This line intersects with flow curve 700kg/h. The intersection point is B. Since B is located between a nominal diameter range of size 40mm~50mm. The larger value, which is size 50mm, is taken as the nominal diameter that we are looking for.

Now let's find out the nominal diameter at an additional condition: the temperature is 205℃. Draw a vertical line from point A until it intersects with the saturated steam curve. The intersection point is named C. Now move from point C to temperature curve 205°C parallelly and we can stop at point D. Draw a vertical line from point D until it intersects with flow curve 700kg/h.The intersection point is named E. Since point E is located between a nominal diameter range of size 40mm~50mm. The larger value, which is size 50mm, is taken as the nominal diameter that we are looking for.

Example 2:

Now let's try to find out the nominal diameter at the following conditions: primary pressure 0.8MPa; secondary pressure 0.05MPa; and flow of saturated steam 700kg/h.

First, we should find out the intersection point F between primary pressure curve 0.8MPa and oblique line. Next, move on the oblique line and find it the intersection point G on the secondary pressure curve 0.05MPa. Draw a vertical line from point G until it intersects with flow curve 700kg/h. the intersection point is named H.

Since point H is located between a nominal diameter range of size 32mm~40mm. The larger value, which is size 40mm in this case, is taken as the nominal diameter that we are looking for.

RP-9,10,11 Type Pressure Reducing Valve (for Steam)

Pilot operated type pressure reducing valve for high-pressure steam.
This product works stably at maximum pressure reduction ratio 20:1 and high differential pressure.
The face-to-face dimensions are the same as those of the former RP-2H Type pressure-reducing valve, but the weight is 40% lighter.
Refer to Page 17 for valve size selection chart.



RP-9 Type

SPECIFICATIONS

Type		Ductile cast iron		Cast steel	Stainless steel
Model name		RP-9		RP-10	RP-11
Code name		**RP9-L**	**RP9-M**	**RP10-C**	**RP11-D**
Applicable fluid		Steam			
Fluid temperature		Max. 220°C		Max. 250°C*1.	Max. 250°C
Applicable primary pressure		Max. 2.0MPa		Max. 3.0MPa	
Adjustable secondary pressure		0.03~0.8MPa*2.			
Maximum reducing rate		20:1			
Minimum pressure differential across the disc		Size 15~80mm: 0.05MPa, Size 100~150mm: 0.07MPa			
Lock up pressure		Max. 0.02MPa			
Offset pressure		Within 0.02MPa (Adjustable secondary pressure 0.03~0.035MPa) Within 0.03MPa (Adjustable secondary pressure over 0.035~0.07MPa) Within 0.05MPa (Adjustable secondary pressure over 0.07~0.8 MPa)			
Leakage allowance		Less than 0.05% of rated flow			
End connection		Flanged JIS 20KRF*3.		Flanged JIS 30KRF*4.	
Materials	**Body**	**Ductile cast iron**		**Cast steel**	**Stainless steel**
	Disc & seat	Stainless steel			
	Piston & cylinder	**Cast bronze**	**Stainless steel**	Stainless steel	
Valve body pressure test		1.5 times of flange rated pressure			
Installation		Upright installation on horizontal pipe			

∗1. RP-10T Type for high-temperature steam (Max. 350°C) is also available.
∗2. RP-9N (size 15~80mm: 0.8~1.95 MPa; size 100~150mm: 0.8~1.93 MPa) and RP-10N, 11N Type (0.8~2.0 MPa) for high adjustable secondary pressure are also available.
∗3. Products with JIS 10, 16K flange are available.
∗4. Products with JIS10, 16, 20K flange are available.

DIMENSIONS
RP-9 Type (Body:Ductile cast iron)

(mm)

Size	L	G	H	d	Cv value	Mass(kg)
15(½″)	170	77	216	¼″	1	7.5
20(¾″)	170	77	216	¼″	2.5	7.5
25(1″)	210	77	216	¼″	4	9
32(1¼″)	210	96	237	¼″	6.5	12
40(1½″)	220	96	237	¼″	9	12.5
50(2″)	250	104	247	¼″	16	15.5
65(2½″)	290	115	262	⅜″	25	20.5
80(3″)	350	122	277	⅜″	36	26.5
100(4″)	384	142	342	⅜″	64	60
125(5″)	434	192	372	⅜″	100	90
150(6″)	544	209	407	⅜″	144	120

Flange code JIS 20KRF

DIMENSIONS
RP-10 Type (Body:Cast steel), RP-11 Type (Body:Stainless steel)

(mm)

Size	L	G	H	d	Cv value	Mass(kg)
15(½″)	198	80	217	¼″	1	7.5
20(¾″)	198	80	217	¼″	2.5	7.5
25(1″)	228	80	221	¼″	4	9
32(1¼″)	232	97	238	¼″	6.5	12
40(1½″)	248	97	238	¼″	9	12.5
50(2″)	280	107	248	¼″	16	15.5
65(2½″)	288	119	263	⅜″	25	20.5
80(3″)	366	126	278	⅜″	36	26.5
100(4″)	426	146	342	⅜″	64	60
125(5″)	454	197	372	⅜″	100	90
150(6″)	564	216	407	⅜″	144	120

Flange code JIS 30KRF

CONSTRUCTION

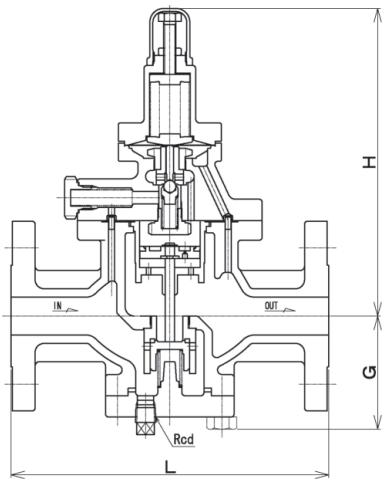

∗1. The structure may vary depending on material and nominal diameter.
∗2. The materials of main body and dimensions are the same as those of the former RP-2H model.

NOMINAL DIAMETER SELECTION CHART (for Steam)

※This Size Selection Chart is for applications with applicable pressure at primary side less than 2.0 MPa.
For models RP-10, 11 Type (with applicable primary pressure higher than 2.0MPa) and those for high secondary pressure (RP-9N, 10N, and 11N Type), please contact our agent in your area.

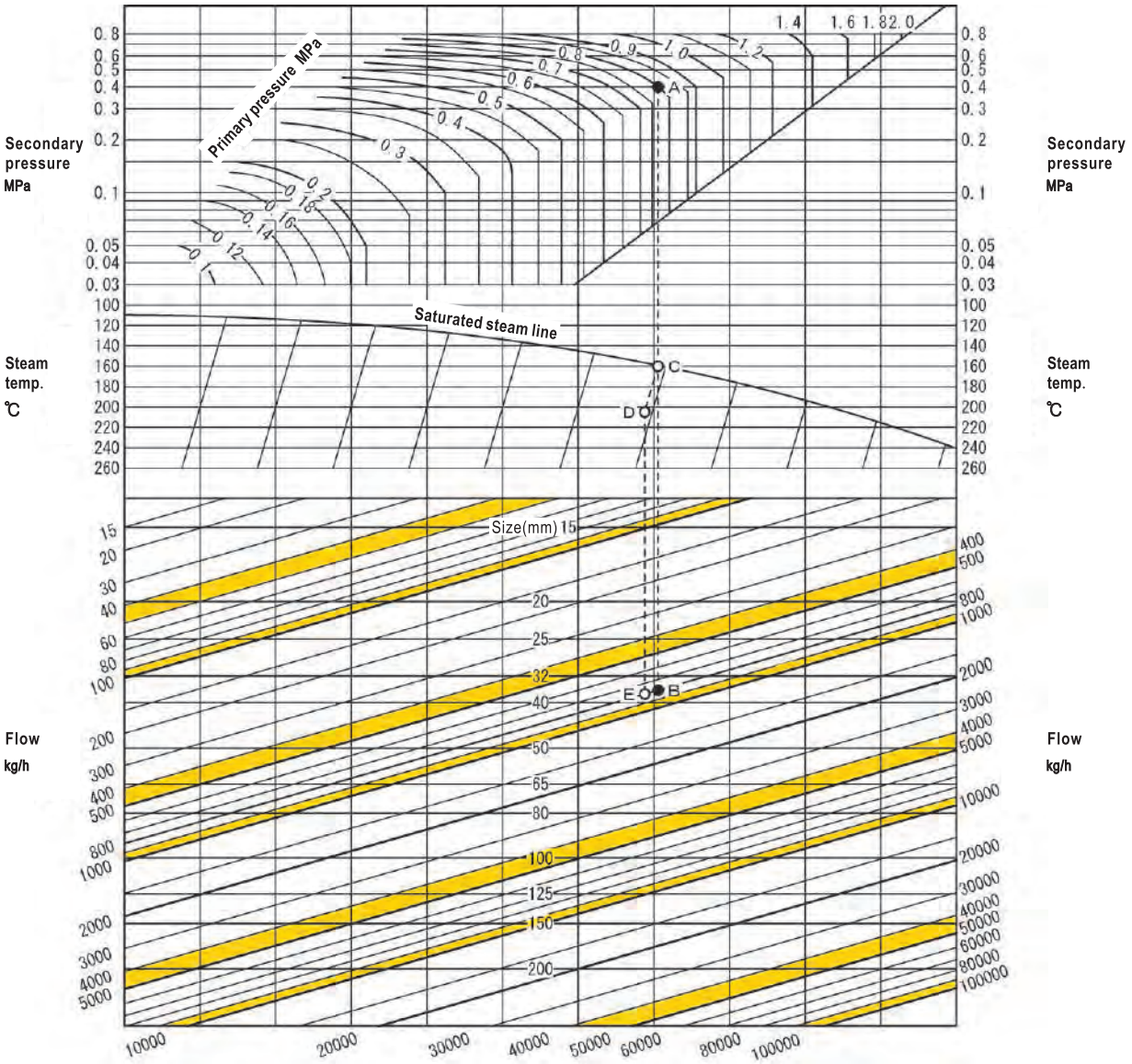

● HOW TO USE THE CHART

Example
Find out the size that is suitable for the following conditions:
Primary pressure: 0.8 MPa
Secondary pressure: 0.4 MPa
Pressure of saturated steam: 800 kg/h
First find out the point of intersection (point A) of the lines representing primary pressure 0.8 MPa and secondary pressure 0.4 MPa. Draw a vertical line from point A. This line intersects with the line representing 800kg/h flow rate at point B. Since point B is between size 32mm and size 40mm, the larger one, which is size 40mm, is selected.
Now assume the conditions are the same but the temperature is 205°C. Draw a vertical line from point A. This line intersects with the line representing temperature of saturated steam at point C. Make a parallel shift of point C until it intersects with the line representing 205°C at point D. Draw a vertical line from point D until it intersects with the line representing flow rate 800 kg/h at point E. Since point E is between size 32mm and size 40mm, the larger one, which is size 40mm, is selected.

RP-6A Type Pressure Reducing Valve (for Air or Gases)

for Factory Equipments Variety of Devices, etc., General-purpose Pilot-operated Valve(Large capacity)

A companion to RP-6 Type especially designed for air and gases.
Refer to Page 20 for valve size selection chart.

FEATURES

- Piston guide and diaphragm allow stable control.
- Wide range of pressure and flow for a variety of applications.
- Easy pressure adjustment by manual handle with automatic lock mechanism.
- Compact design.

SPECIFICATIONS

Model name		RP-6A	
Code name		RP6A-B	RP6A-G
Applicable fluid		Air & gases	
Fluid temperature		5~80°C	
Applicable primary pressure		Max. 1.0 MPa	
Adjustable secondary pressure		0.03~0.8 MPa	
Maximum reducing rate		10:1	
Minimum pressure differential across the disc		0.07 MPa	
Lock up pressure		Max. 0.02 MPa	
Offset pressure	Size 15~80mm	Within 0.02 MPa (Adjustable secondary pressure 0.03~0.035 MPa) Within 0.03 MPa (Adjustable secondary pressure over 0.035~0.07 MPa) Within 0.05 MPa (Adjustable secondary pressure over 0.07~0.8 MPa)	
	Size 100~200mm	Within 0.05MPa	
Leakage allowance		Size 15~80mm: Nil (Confirm at pressure gauge), Size 100~200mm: Less than 0.01% of rated flow	
End connection		Flanged JIS 10KFF	
Materials	Body	Cast iron	
	Disc & seat	Disc (Brass with synthetic rubber)*, Seat (Stainless steel)	Disc (Stainless steel with synthetic rubber)*, Seat (Stainless steel)
	Piston & cylinder	Brass & Cast bronze	Stainless steel
Valve body pressure test		Hydraulic 1.5 MPa	
Installation		Upright installation on horizontal pipe	

* The valve disc of sizes 100~200mm are made of stainless steel (metal touch).

DIMENSIONS

(mm)

Size	L	G	H	d	Cv value	Mass(kg)
15(½″)	140	62	155	¼″	1	7.5
20(¾″)	140	62	155	¼″	2.5	7.5
25(1″)	150	67	160	¼″	4	9
32(1¼″)	180	73	182	⅜″	6.5	12
40(1½″)	180	73	182	⅜″	9	12.5
50(2″)	200	86	187	⅜″	16	15.5
65(2½″)	230	94	202	⅜″	25	20.5
80(3″)	260	110	221	⅜″	36	26.5
100(4″)	320	139	285	⅜″	64	52
125(5″)	380	187	320	⅜″	100	82
150(6″)	420	206	368	⅜″	144	110
200(8″)	540	255	425	⅜″	256	176

Flange code JIS 10KFF



CONSTRUCTION

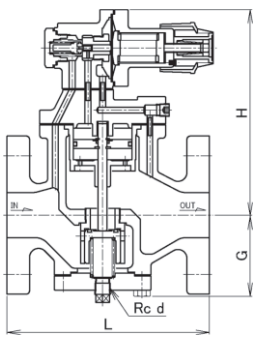

Size 15~80mm

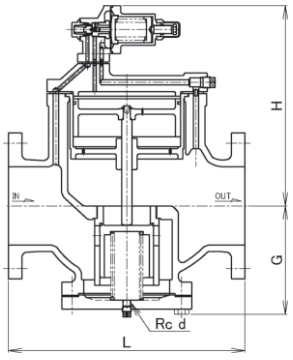

Size 100~200mm

REFERENCE

We also provide spacers for adjustment of face to face dimension. Such spacers are useful when replacing RP-1HA Type with RP-6A Type valve, such as in the case of modification of equipment. For more details, please contact our agent in your area.

RP-8A Type Pressure Reducing Valve (for Air or Gases)

for Factory Equipments Variety of Devices, etc., General-purpose Pilot-operated Valve(Large capacity)

With the body and main parts made of stainless steel, RP-8A Type is ideal for applications with clean fluid. In addition, the durability and corrosion resistance of stainless steel also make RP-8A Type useful in a variety of other applications.
Refer to Page 20 for valve size selection chart.



FEATURES

- Piston guide and diaphragm allow stable control.
- Wide range of pressure and flow for a variety of applications.
- Easy pressure adjustment by manual handle with automatic lock mechanism.
- Compact design.

SPECIFICATIONS

Model name	RP-8A
Code name	RP8A-D
Applicable fluid	Air & gases
Fluid temperature	5~80℃
Applicable primary pressure	Max. 1.0MPa
Adjustable secondary pressure	0.03~0.8MPa
Maximum reducing rate	10:1
Minimum pressure differential acrossthe disc	0.07MPa
Lock up pressure	Max. 0.02MPa
Offset pressure	Within 0.02MPa(Adjustable secondary pressure 0.03~0.035MPa) Within 0.03MPa(Adjustable secondary pressure over 0.035~0.07MPa) Within 0.05MPa(Adjustable secondary pressure over 0.07~0.8MPa)
Leakage allowance	Nil(Confirm at pressure gauge)
End connection	Flanged JIS 10KFF
Materials	Body(Stainless steel),Diaphragm(Stainless steel),Disc & seat(Stainless steel) Disc tip & pilot disc(Synthetic rubber)
Valve body pressure test	Hydraulic 1.5MPa

*For size15mm, select RD-20, 20F Type, and for size 100~150mm, select RP-11A Type.

DIMENSIONS

(mm)

Size	L	G	H	Cv value	Mass(kg)
20(¾″)	140	71	159	2.5	8
25(1″)	150	71	164	4	9
32(1¼″)	180	90	182	6.5	12.5
40(1½″)	180	90	182	9	12.5
50(2″)	200	100	187	16	16
65(2½″)	230	110	202	25	22
80(3″)	260	118	221	36	27.5

Flange code JIS 10KFF

CONSTRUCTION

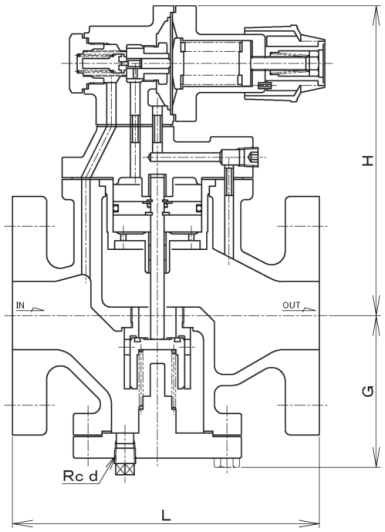

Size	d
20~50	¼″
65 · 80	⅜″

Depending on size, the structure may vary slightly.

NOMINAL DIAMETER SELECTION CHART (for Air or Gases)

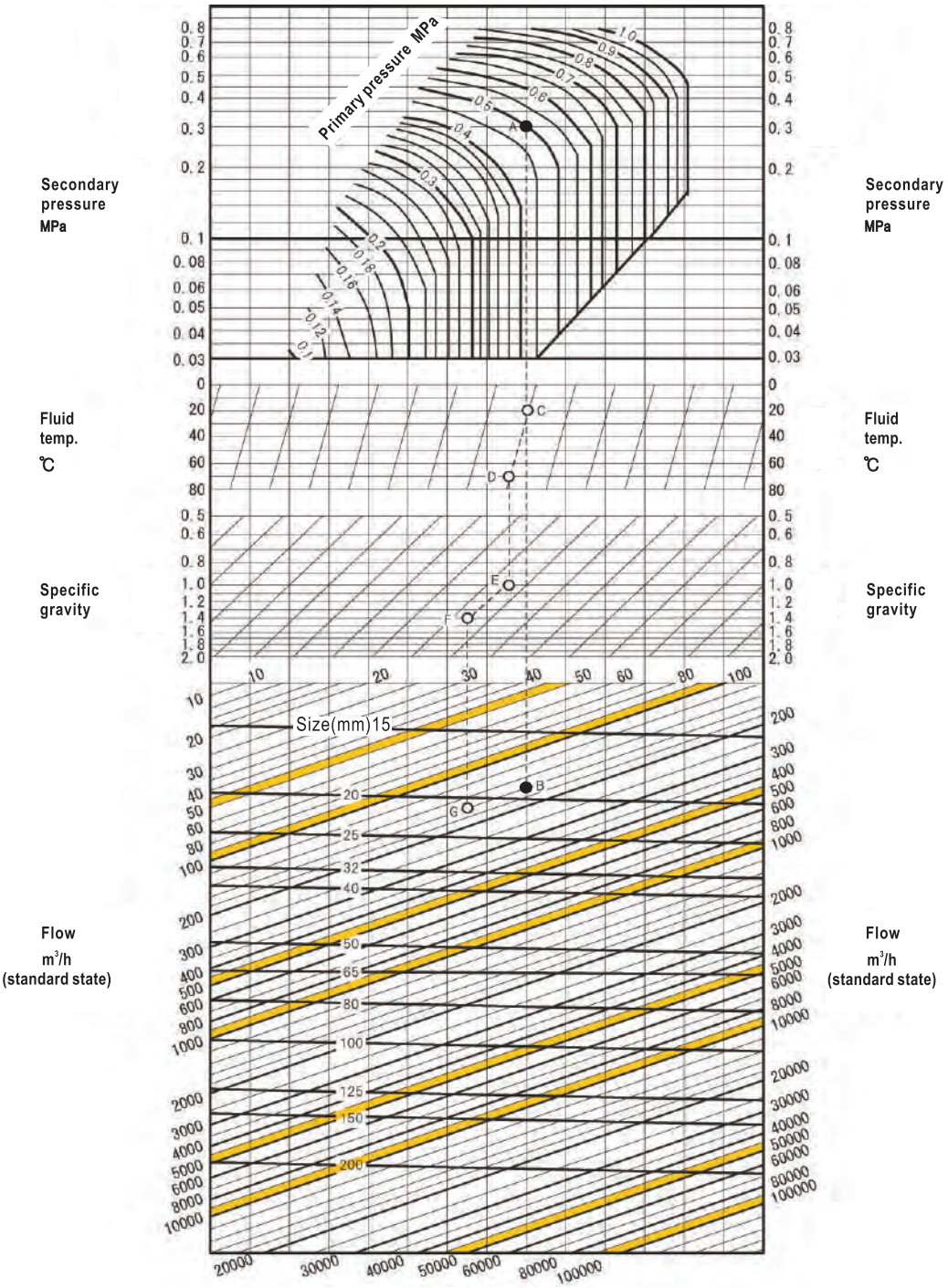

● HOW TO USE THE CHART

This example shows you how to decide nominal diameter of valve at the following conditions: primary pressure 0.5 MPa; secondary pressure 0.3 MPa; temperature 20℃; specific gravity 1(air); and flow 160m³/h (standard state).

First, find out the intersection point A of primary pressure curve 0.5MPa and secondary pressure curve 0.3MPa.

Draw a vertical line from point A. This line intersects with flow curve 160m³/h.The intersection point is B. Since B is located between a nominal diameter range of size 15~20mm. The larger value, which is size 20mm, is taken as the nominal diameter that we are looking for.

Now let's find out the nominal diameter when some conditions are changed. The other conditions are the same, but the temperature is 70℃, and the specific gravity is 1.4. Draw a vertical from point A until it intersects with the temperature curve 20℃. The intersection point is named C. Now move from point C to temperature curve 70℃ parallelly and we can stop at point D. Draw a vertical line from point D until it intersects with specific gravity curve 1.4. The intersection point is named E.

Now move from point E parallelly to point F. Draw a vertical line from point F until it intersects with flow curve (160m³/h). The intersection point is named G. Since point G is located between a nominal diameter range of 20~25mm.The larger value, which is 25mm, is taken as the nominal diameter that we are looking for.

RP-9A,10A,11A Type Pressure Reducing Valve (for Air or Gases)

RP-9A,10A,11A Type are large-diameter pilot-operated types pressure reducing valves for air and gases, and companions to RP-9,10,11 Type pressure reducing valves for steam.

The face-to-face dimensions are the same as those of the former RP-2HA Type pressure-reducing valve, but the weight is 40% lighter.

Refer to Page 22 and 23 for valve size selection chart.



RP-9A Type

■ CONSTRUCTION

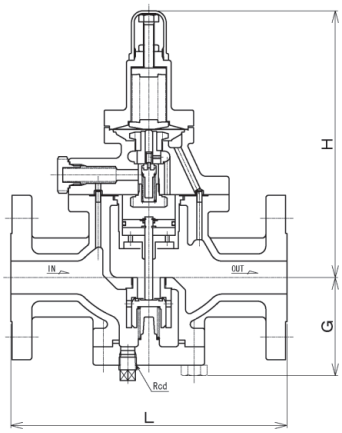

＊1. The structure may vary depending on material and nominal diameter.
＊2. The materials of main body and dimensions are the same as those of the former RP-2HA model.

■ SPECIFICATIONS

Type		Ductile cast iron		Cast steel	Stainless steel
Model name		RP-9A		RP-10A	RP-11A
Code name		RP9A-L	RP9A-M	RP10A-C	RP11A-D
Applicable fluid		Air & gases			
Fluid temperature		5~80°C			
Applicable primary pressure		Max. 2.0MPa		Max. 3.0MPa	
Adjustable secondary pressure		0.03~0.8MPa*1.			
Maximum reducing rate		10:1			
Minimum pressure differential across the disc		0.07 MPa			
Lock up pressure		Max. 0.02 MPa			
Offset pressure		Within 0.02 MPa (Adjustable secondary pressure 0.03~0.035 MPa) Within 0.03 MPa (Adjustable secondary pressure over 0.035~0.07 MPa) Within 0.05 MPa (Adjustable secondary pressure over 0.07~0.8 MPa)			
Leakage allowance		Less than 0.01% of rated flow, RP-9A(Size 15~80mm): Nil (Confirm at pressure gauge)			
End connection		Flanged JIS 20KRF*2.		Flanged JIS 30KRF*3.	
Materials	Body	Body: (Ductile cast iron), Seat: (Stainless steel)		Body: (Cast steel), Seat: (Stainless steel)	Body: (Stainless steel), Seat: (Stainless steel)
	Disc & seat	Disc(Brass with synthetic rubber heat treatment)*4.	Disc(Stainless steel with synthetic rubber heat treatment)*4.	Stainless steel	
	Piston & cylinder	Brass&Cast bronze	Stainless steel	Stainless steel	
Valve body pressure test		1.5 times of flange rated pressure			
Installation		Upright installation on horizontal pipe			

＊1. RP-9AN (0.8~1.93 MPa) and RP-10AN, 11AN Type (0.8~2.0 MPa) for high adjustable secondary pressure are also available.
＊2. Products with JIS 10, 16K flange are available.
＊3. Products with JIS10, 16, 20K flange are available.
＊4. The disc of size 100~150mm valves is made of stainless steel (metal touch).

■ DIMENSIONS

RP-9A Type(Body:Ductile cast iron)

(mm)

Size	L	G	H	d	Cv value	Mass(kg)
15(½″)	170	77	216	¼″	1	7.5
20(¾″)	170	77	216	¼″	2.5	7.5
25(1″)	210	77	216	¼″	4	9
32(1¼″)	210	96	237	¼″	6.5	12
40(1½″)	220	96	237	¼″	9	12.5
50(2″)	250	104	247	¼″	16	15.5
65(2½″)	290	115	262	⅜″	25	20.5
80(3″)	350	122	277	⅜″	36	26.5
100(4″)	384	142	342	⅜″	64	60
125(5″)	434	192	372	⅜″	100	90
150(6″)	544	209	407	⅜″	144	120

＊Depending on pressure condition, compensation may be necessary. Please contact our agent in your area.

Flange code JIS 20KRF

■ DIMENSIONS

RP-10A Type(Body:Cast steel), RP-11A Type(Body:Stainless steel)

(mm)

Size	L	G	H	d	Cv value	Mass(kg)
15(½″)	198	80	217	¼″	1	7.5
20(¾″)	198	80	217	¼″	2.5	7.5
25(1″)	228	80	221	¼″	4	9
32(1¼″)	232	97	238	¼″	6.5	12
40(1½″)	248	97	238	¼″	9	12.5
50(2″)	280	107	248	¼″	16	15.5
65(2½″)	288	119	263	⅜″	25	20.5
80(3″)	366	126	278	⅜″	36	26.5
100(4″)	426	146	342(340)	⅜″	64	60
125(5″)	454	197	372(370)	⅜″	100	90
150(6″)	564	216	407(405)	⅜″	144	120

＊1. Figures in ( ) are for RP-11A Type.
＊2. Depending on pressure condition, compensation may be necessary. Please contact our agent in your area.

Flange code JIS 30KRF

NOMINAL DIAMETER SELECTION CHART (for Air or Gases) [Max. 2.0MPa]

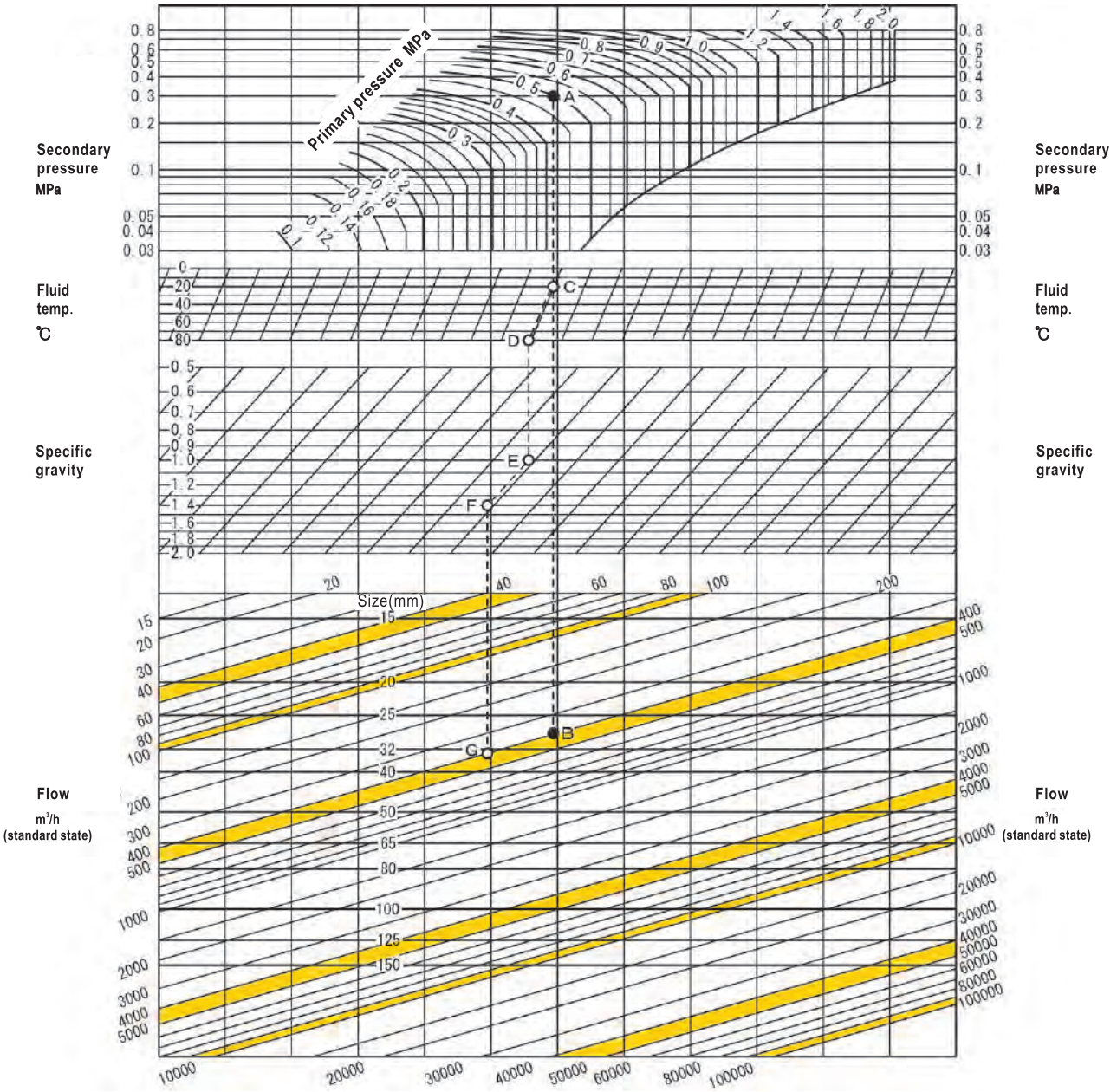

● HOW TO USE THE CHART

Example
Find out the size that is suitable for the following conditions:
Primary pressure: 0.5 MPa
Secondary pressure: 0.3 MPa
Temperature: 20°C
Specific gravity: 1 (air)
Flow rate: 400 m^3/h
First find out the point of intersection (point A) of the lines representing primary pressure 0.5 MPa and secondary pressure 0.3 MPa. Draw a vertical line from point A. This line intersects with the line representing 400 m^3/h flow rate at point B. Since point B is between size 25mm and size 32mm, the larger one, which is size 32mm, is selected.
Now assume the conditions are the same but the temperature is 80°C and specific gravity is 1.4. Draw a vertical line from point A. This line intersects with the line representing temperature 20°C at point C. Make a parallel shift of point C until it intersects with the line representing temperature 80°C at point D. Draw a vertical line from point D until it intersects with the line representing specific gravity 1 at point E. Make a parallel shift of point E until it intersects with the line representing specific gravity 1.4 at point F. Draw a vertical line from point F until it intersects with the line representing flow rate 400 m^3/h at point G. Since point G is between size 32mm and size 40mm, the larger one, which is size 40mm, is selected.

DATA/RP-10A,11A Type Pressure Reducing Valve(for Air or Gases)

NOMINAL DIAMETER SELECTION CHART (for Air or Gases) [Max. 3.0MPa]

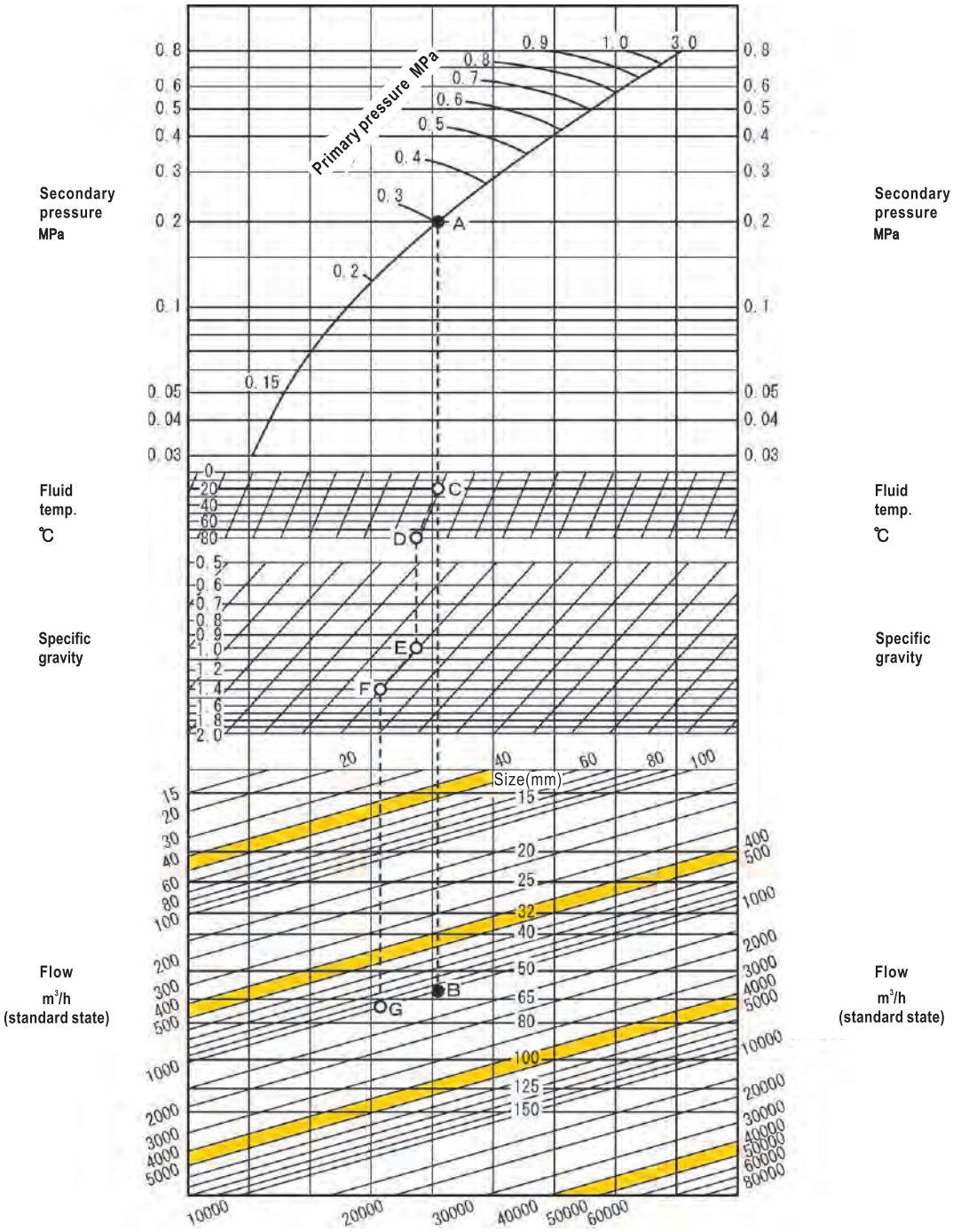

● HOW TO USE THE CHART

Find out the size that is suitable for the following conditions:
Primary pressure: 1.0 MPa
Secondary pressure: 0.2 MPa
Temperature: 20°C
Specific gravity: 1 (air)
Flow rate: 1000 m^3/h (standard state)
First find out the point of intersection (point A) of the lines representing primary pressure 1.0 MPa and secondary pressure 0.2 MPa. Draw a vertical line from point A. This line intersects with the line representing 1000m^3/h flow rate at point B. Since point B is between size 50mm and size 65mm, the larger one, which is size 65mm, is selected.
Now assume the conditions are the same but the temperature is 80°C and specific gravity is 1.4. Draw a vertical line from point A. This line intersects with the line representing temperature 20°C at point C. Make a parallel shift of point C until it intersects with the line representing temperature 80°C at point D. Draw a vertical line from point D until it intersects with the line representing specific gravity 1 at point E. Make a parallel shift of point E until it intersects with the line representing specific gravity 1.4 at point F. Draw a vertical line from point F until it intersects with the line representing flow rate 1000 m^3/h at point G. Since point G is between size 65mm and size 80mm, the larger one, which is size 80mm, is selected.
Note. Compensation of flow (Cv) will be conducted when secondary pressure (MPa·A) / primary pressure (MPa·A) is less than 0.745MPa·A.

DATA/RP-Type Pressure Reducing Valve (RP-6,8,9,10,11 Type Series) (for Steam or Gases)

FLOW CHARACTERISTICS

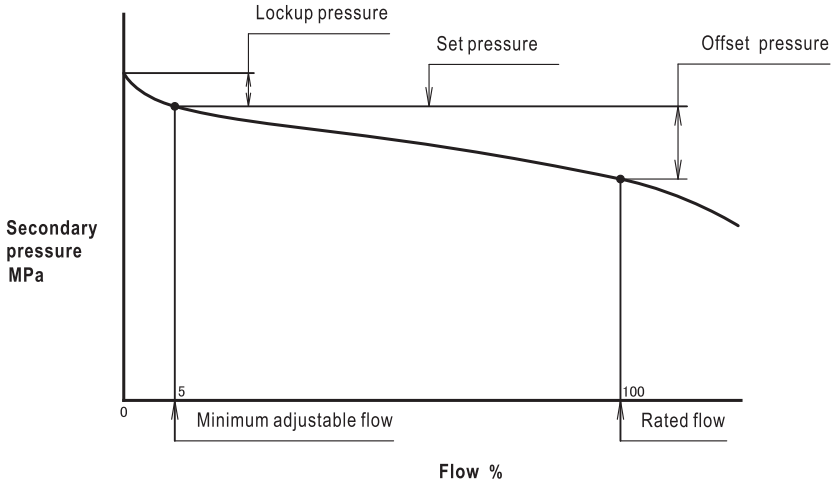

PRESSURE CHARACTERISTICS

Example: RP-6 Type

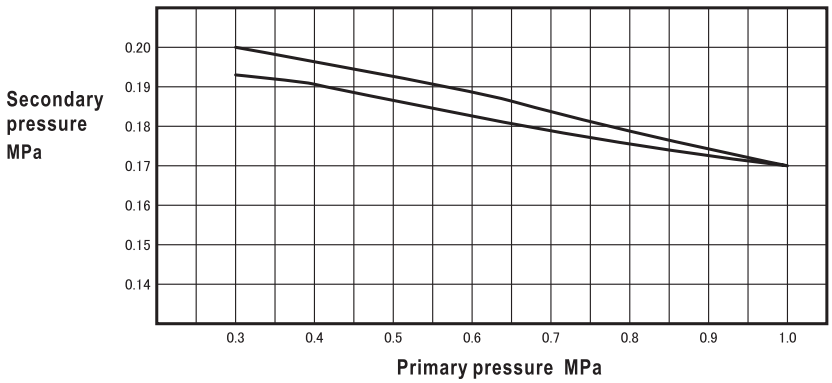

The secondary pressure is set at 0.2 MPa when primary pressure is 0.3 MPa. The chart shows the change of secondary pressure when primary pressure changes between 0.3~1.0~0.3 MPa.

TERMS

- **Primary pressure:** The inlet pressure of pressure reducing valve or the inlet pressure of piping that is near to pressure reducing valve.
- **Secondary pressure:** The outlet pressure of pressure reducing valve or the outlet pressure of piping that is near to pressure reducing valve.
- **Set pressure:** Secondary pressure at minimum adjustable flow.
- **Offset pressure:** The difference between secondary pressure and set pressure when primary pressure is kept at a constant level but flow increases gradually from minimal adjustable flow to the rated flow of pressure reducing valve.
- **Lockup pressure:** The increased pressure above set pressure when the secondary valve of pressure reducing valve is closed.
- **Minimum adjustable flow:** The minimum flow of pressure reducing valve for maintaining stable flow.
- **Rated flow:** The maximum flow at the specified offset pressure when primary pressure is kept at a constant level.

TIPS: HOW TO SELECT AN APPROPRIATE NOMINAL DIAMETER?

❶ When you select the size, use nominal diameter selection chart. Considering pressure loss and thermal loss, the flow amount for selecting the nominal diameter should be larger by 10-20% than designed flow amount, particularly in case of the pressure reducing rate is large or the set pressure is lower than 0.1MPa.

❷ The secondary pressure of a pressure reducing valve changes when primary pressure or flow changes. Therefore, when selecting nominal diameter, it is necessary to consider lockup pressure and offset.

(See flow characteristics and pressure characteristics.)

❸ In the case when primary and secondary pressure are not constant but change within a certain range, the nominal diameter can be determined using the primary and secondary pressures that produce the smallest differential pressure.

❹ In the case the pressure reduction rate exceeds its maximum value, it is required to perform two-step pressure reduction by using 2 pressure reducing valves. Although the flow at step 1 and step 2 are the same, the nominal diameter of the valve at step 1 should be different from that at step 2, because primary pressure is different from secondary pressure. Therefore, it is necessary to select two nominal diameters for the valves to be used.

❺ It is easy to understand that an extremely small valve allows only a tiny flow. However, this does not mean a large valve is better than a small valve. In fact, an extremely large valve may cause the occurrence of “hunting” , which can lead to abnormal wearing. Another thing to be noted is the minimum adjustable flow, which is about 5% of the rated flow. You should not select a valve which may be used when the flow is lower than the minimum adjustable flow. In winter or summer, flow may change extremely. It is recommended that you install two pressure reducing valves, a large one and a smaller one, and switch between them according to change of flow.

DATA/Pressure Reducing Valve (for Steam or Gases)

■ INSTALLATION EXAMPLE

Fig.1 With bypass piping

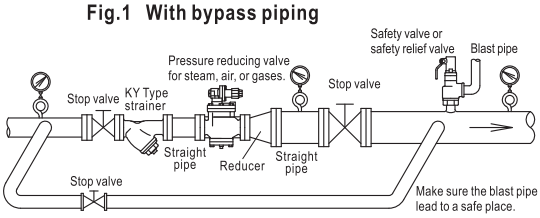

Fig.2 Without bypass piping

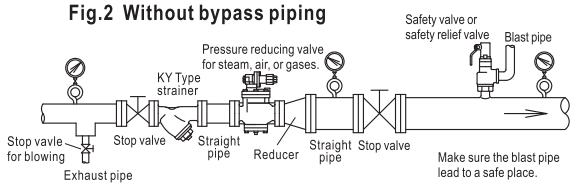

■ POINTS FOR INSTALLATION

- Installation of pressure reducing valve and piping.

1. Pressure reducing valve should be installed in horizontal pipe vertically.
2. Install safety valve or safety relief valve on the secondary side of pressure reducing valve.

※1. Equipment may be damaged due to increase of secondary pressure at the time of failure of pressure reducing valve.

※2. See Table 1 for set pressure of safety valve and safety relief valve.

※3. In the case safety valve or safety relief valve is used as an alarm, its nominal diameter should be big enough to allow discharge of 10% maximum flow of pressure reducing valve, which is about the leakage of pressure reducing valve. In very few cases, safety valve or safety relief valve may allow discharge of maximum flow of pressure reducing valve.(reference value: see Table 2 and Table 3).

TABLE1. SET PRESSURE FOR SAFETY RELIEF VALVE (MPa)

Set pressure of pressure reducing valve	Set pressure of safety valve※2.
0.1 or less	+ 0.05 (+0.08)
Over 0.1 and less than 0.4	+ 0.08 (+0.14)
0.4 or more and less than 0.6	+ 0.12 (+0.2)
0.6 or more and less than 0.8	+ 0.15 (+0.28)
0.8 or more and less than 1.0	+ 0.19
1.0 or more and 1.2 or less	+ 0.23

Add the above valve to set pressure of the pressure reducing valve.

※ 1.The above value is added to the set pressure of pressure-reducing valve.
※ 2. The values in parentheses are applicable to soft-seated type (SL-37V~40FV, 43V, 44V Type).

TABLE2. FLOW FOR SAFETY RELIEF VALVE (Saturated steam)

SL-37~40 TYPE (kg/h)

Set pressure (MPa)	Size(mm)					
	15(½″)	20(¾″)	25(1″)	32(1¼″)	40(1½″)	50(2″)
0.05	13.5	23.1	33.5	62.2	97.4	158
0.1	17.5	29.8	43.4	80.4	125	204
0.2	25.4	43.3	63	116	182	297
0.3	34.2	58.2	84.6	156	245	399
0.4	42	71.6	104	193	302	490
0.5	50.6	86.2	125	232	363	590
0.6	59.2	100	146	271	424	690
0.7	67.7	115	167	310	486	790
0.8	76.3	129	188	350	547	890
0.9	84	143	207	385	602	979
1.0	92.4	157	228	424	663	1070

TABLE3. FLOW FOR SAFETY RELIEF VALVE (Air)

SL-37~40 TYPE (kg/h)

Set pressure (MPa)	Size(mm)					
	15(½″)	20(¾″)	25(1″)	32(1¼″)	40(1½″)	50(2″)
0.05	21.7	37	53.8	99.8	156	253
0.1	28.3	48.3	70.2	130	203	331
0.2	41.2	70.2	102	189	296	481
0.3	55.3	94.3	137	254	397	645
0.4	69.5	118	171	318	498	810
0.5	83.6	142	206	383	600	975
0.6	97.7	166	241	448	701	1140
0.7	111	190	276	513	803	1300
0.8	126	214	311	578	904	1470
0.9	140	238	346	643	1000	1630
1.0	154	262	381	708	1100	1790

3. Install strainer at the primary side of pressure reducing valve.

4. For devices that cannot be stopped, install bypass piping (with stop valve) from the primary side to the secondary side of pressure reducing valve. If bypass piping is not suitable, then install blowing stop valve, which is derived from the main pipe before the primary side of pressure reducing valve, so as to make flushing possible.

5. Install straight piping, stop valve, and pressure gauge before and after pressure reducing valve.
If end connection of pressure reducing valve is realized using screw, then use union joint to make it easy to fix and remove.

※ The diameter of piping before and after pressure reducing valve should be determined based on the standard velocity of flow of fluid.
Generally, since the nominal diameter of secondary piping of pressure reducing valve for steam and gases is larger than the diameter of pressure reducing valve, it is necessary to use reducer.

6. If you install solenoid valve (on/off operation) or control valve at the secondary side of pressure reducing valve, there should be an interval (L) between such solenoid valve or control valve and pressure reducing valve. The interval (L) should be larger than 2m in the case of solenoid valve.As for control valve, the interval should be larger than 1m if nominal diameter is less than 100mm, and larger than 1.5m if nominal diameter is larger than 125mm(see Fig.3).

7. In the case of 2-step pressure reduction, the interval between 2 valves should be 1~2m (see Fig.4).

Fig.3 INTERVAL BETWEEN PRESSURE REDUCING VALVE AND CONTROL VALVE

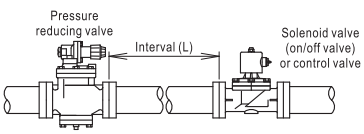

Fig.4 INTERVAL BETWEEN VALVES (2-STEP PRESSURE REDUCTION)

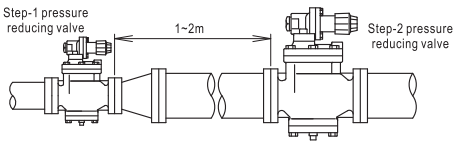

DATA/Pressure Reducing Valve (for Steam or Gases)

8. For pressure reducing valve for steam, “hunting” or vibration may occur if drain accumulates.
   To prevent hunting and vibration, it is necessary to prevent drain from entering into the piping or install steam trap at the primary side.
   In addition, since pressure reducing valve cannot be closed completely, it is necessary to install steam trap at the secondary side if the amount of steam used is near zero. (See Fig.7)

Fig.5: Proper installation

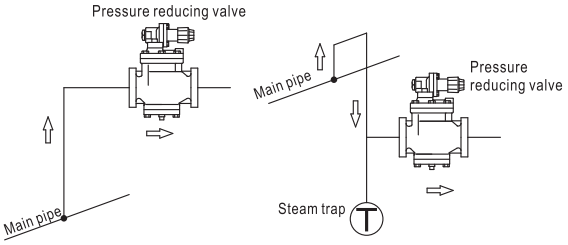

Fig.6:Improper installation

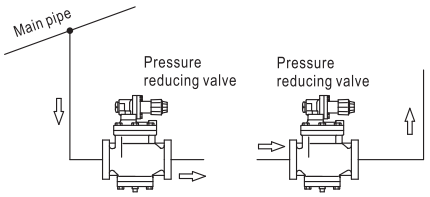

Fig.7:In case of zero steam consumption at secondary side of pressure reducing valve

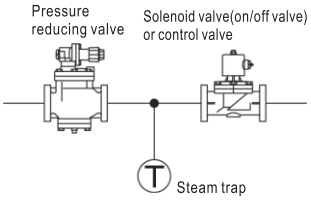

9. Make sure sufficient space should be left for maintenance.
10. Apply appropriate support to pressure reducing valve to make sure it should not bear the weight of piping, bending force, or vibration directly.
11. If there is possibility of freezing, apply thermal insulation or discharge the drain.
12. The secondary pressure of the valve is not adjusted at delivery. Therefore, you should adjust the secondary pressure to the desired pressure before use.
    ※ The secondary pressure of a non-adjusted valve is near to zero.
    ※ How to adjust the secondary pressure:
    ① Close the stop valves at primary and secondary sides.
    ② Open the blowing stop valve or stop valve in bypass and remove any content inside. Such operation is called flushing and should be carried out sufficiently by spending sufficient time on it.Take care not to make the secondary pressure rise excessively.
    ③ Close the stop valve in by pass or blowing stop valve completely.
    ④ Make sure there is not any spring load caused by adjusting screw.
    ⑤ Open the stop valve at primary side gradually.
    ⑥ Make sure you have adjusted the secondary pressure. Open the stop valve at the secondary side slightly to allow small flow.
    ⑦ Apply a small spring load using handle or adjusting screw.
    Once the fluid starts flowing, open the stop valve at the secondary side gradually.
    ⑧ Read the pressure gauge and apply more spring load to make the pressure reach the set pressure. The pressure rises if you turn the handle or adjusting screw in the right direction and falls if you turn them in the left direction.
    ⑨ Once the desired pressure is reached, use the lock nut to lock the adjusting screw. After the screw is locked, the spring load will not change.

• ADJUSTING SECONDARY PRESSURE

For RP-6 Type series and RD-40 Type series.

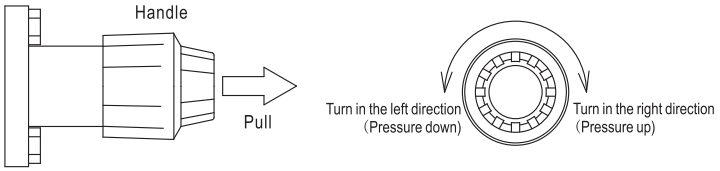

• OTHER PRESSURE REDUCING VALVES

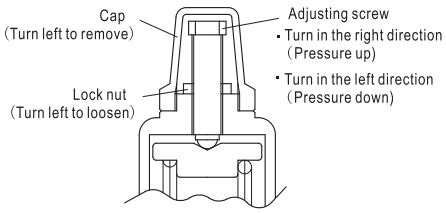

■ DIAMETER OF PIPING BEFORE AND AFTER PRESSURE REDUCING VALVE

The nominal diameter of pressure reducing valve can be determined using relevant graphs made for such purpose. The diameter of piping before and after pressure reducing valve must be determined based on the standard velocity of fluid.
Extremely small diameter or large velocity of fluid may cause large loss of pressure inside the piping and wearing, vibration of the piping. Therefore, it is necessary to consider the standard velocity of fluid when determining the diameter of piping.

● **Table of velocity of steam as standard condition.**

Item	For steam	Standard velocity (m/s)
Pipage	Saturated steam (0.2~0.5MPa)	15~20
	Saturated steam (0.5~1.5MPa)	20~30
(Steam engine)	Saturated steam	20~30
	Super heated steam	30~40

● **Table of velocity of air as standard condition.**

Item	For air	Standard velocity(m/s)
Pipage	(0.1~0.2MPa)	8~15
	(20~30MPa)	5~7
(Compressor)	Saturated line	10~20
	Low pressure supplyline	20~30
	High pressure supply line	10~15

RP-7 Type Pressure Reducing Valve (for Steam)

Used in Food Processing Sterilizing Cleaning Equipments for Clean Steam

RP-7 Type is a compact, pilot-operated type pressure reducing valve for application on equipments or devices with comparatively small flow.

It is small, light-duty (MAX.50% according to our data) and can be installed as a part of a machine.



FEATURES

- Piston guide and special seal ring allow stable control over small flow and rated flow of fluid.
- Easy pressure adjustment by manual handle with automatic lock mechanism.
- Compact design.

SPECIFICATIONS

Model name		RP-7	
Code name		RP7-F☐	RP7-J☐
		※ L(low pressure.) or H (high pressure.) for adjustable secondary pressure is required in ☐.	
Size		15・20・25(½″・¾″・1″)	
Applicable fluid		Steam	
Fluid temperature		Max. 220℃	
Applicable primary pressure		Max. 1.6MPa	
Adjustable secondary pressure		L:0.03~0.4MPa,H:0.3~0.8MPa	
Maximum reducing rate		20 : 1	
Minimum pressure differential across the disc		0.05MPa	
Lock up pressure		Max.0.02MPa	
Offset pressure		Within 0.02MPa(Adjustable secondary pressure 0.03~0.035MPa) Within 0.03MPa(Adjustable secondary pressure over 0.035~0.07MPa) Within 0.05MPa(Adjustable secondary pressure over 0.07~0.8MPa)	
Leakage allowance		Less than 0.05% of rated flow	
Cv value		Size 15mm:1, Size 20mm:2, Size 25mm:3	
End connection		Screwed JIS Rc	
Materials	Body	Cast bronze	
	Disc & seat	Stainless steel	
	Piston & cylinder	Brass&Cast bronze	Stainless steel
Valve body pressure test		Hydraulic 2.4MPa	

CONSTRUCTION

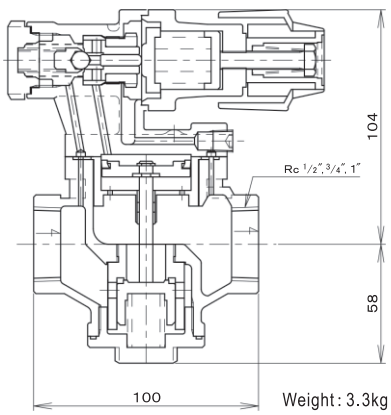

Weight : 3.3kg

NOMINAL DIAMETER SELECTION CHART (for Steam)

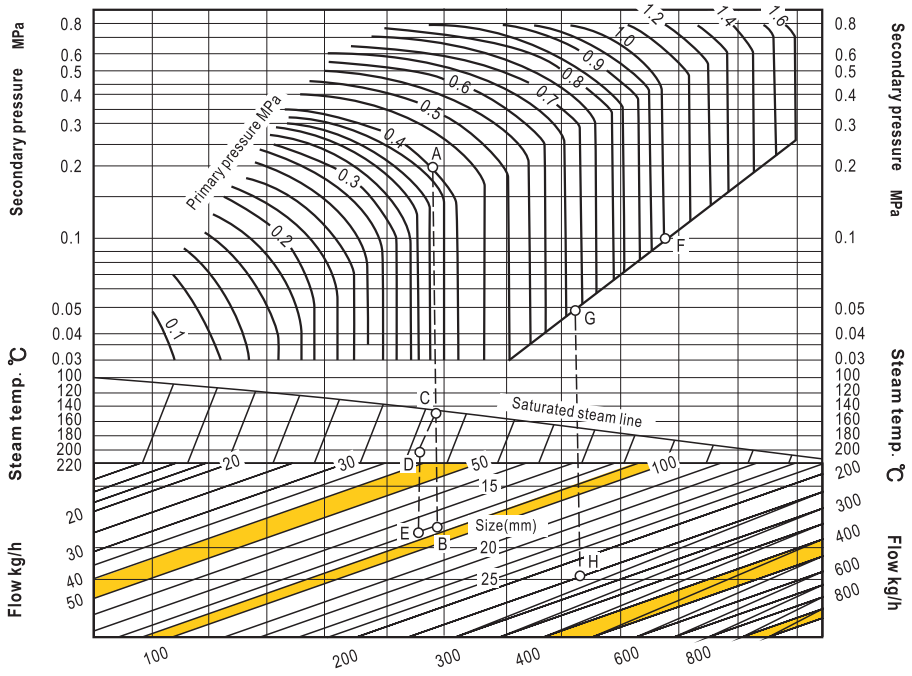

Example 1:
Primary pressure: 0.4MPa (saturated steam)
Secondary pressure: 0.2MPa
Flow: 80 kg/h
At the above conditions, the nominal diameter should be size 20 mm.
At the same conditions and at 200℃, the nominal diameter is also size 20 mm.

Example 2:
Primary pressure: 1.0MPa (saturated steam)
Secondary pressure: 0.05MPa
Flow: 250 kg/h
At the above conditions, the nominal diameter should be size 25 mm.

RD-40, 41, 41F Type Pressure Reducing Valve (for Steam)

for Food Processing, Medical Devices, Laundry Machines and other Steam Equipments/Devices

Compact, light-duty, direct operated type pressure reducing valve, ideal for integration into a variety of equipments for precise steam control.

Most suitable for food processing equipments, kitchen equipments, medical devices, laundry machines, air-conditioning (humidifying) equipments, and other equipments /devices that are required to be rust free.

For high-grade steam lines, a valve with stainless steel body is most suitable.



RD-40, 41 Type



RD-41F Type

FEATURES

- Ensure large flow (heat) necessary for starting up machines.
- The stainless steel/bronze body and stainless steel disc & seat ensure supply of clean steam.
- Precise adjustment of secondary pressure with manual handle with automatic lock mechanism.
- Stainless steel bellows and embedded strainer (80 mesh) allow high durability.

SPECIFICATIONS

Body material		Cast bronze, Screwed	Stainless steel, Screwed	Stainless steel, Flanged
Model name		RD-40 L/M/H	RD-41 L/M/H	RD-41F L/M/H
Code name		**RD40-J ☐**	**RD41-D ☐**	**RD41F-D ☐**
		※L, M or H for adjustable secondary pressure is required in ☐.		
Applicable fluid		Steam		
Fluid temperature		Max. 220 ℃		
Applicable primary pressure		Max. 1.0MPa*		
Adjustable secondary pressure (Color of name plate and spring)		**L:0.02~0.25MPa (Green) M:0.2~0.4MPa (Blue) H:0.35~0.8MPa (Red)**		
Maximum reducing rate		20:1		
Minimum pressure differential across the disc		0.02MPa		
Lock up pressure		Max. 0.02MPa		
Offset pressure at rated flow		Within set pressure ✕ 0.5 (Adjustable secondary pressure Max. 0.13MPa) Within 0.07MPa (Adjustable secondary pressure over 0.13MPa~0.4MPa) Within 0.12MPa (Adjustable secondary pressure over 0.4MPa~0.8MPa)		
Leakage allowance		Less than 0.05% of rated flow		
End connection		Screwed JIS Rc		Flanged JIS 10KRF
Materials	**Body**	Cast bronze	Stainless steel	Stainless steel
	Trim	Disc & seat (Stainless steel), Bellow (Stainless steel)		
Valve body pressure test		Hydraulic 1.5MPa		

*Applicable primary pressure 1.6MPa is also available upon your request.

CONSTRUCTION

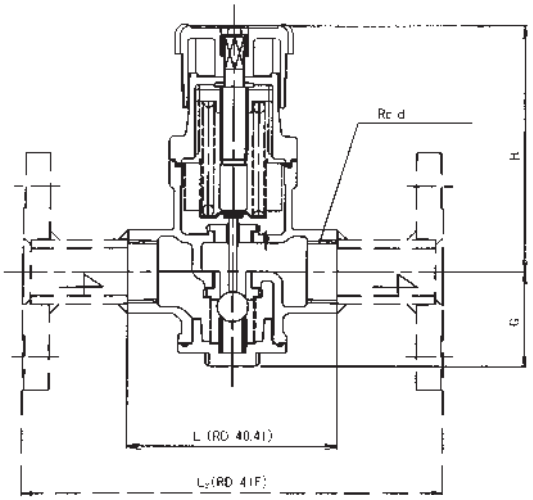

The structure of the flange-type of welded part may be different from what is shown in the drawing.

DIMENSIONS (mm)

Size	d	L_1	L_2	G	H
15(½″)	½″	83	186	55	128
20(¾″)	¾″	96	190	55	128
25(1″)	1″	108	190	55	128

MASS (kg)

Size	RD-40 Type	RD-41 Type	RD-41F Type
15(½″)	1.7	2	3.8
20(¾″)	1.7	2	4
25(1″)	1.9	2.4	5.5

DATA/RD-40, 41, 41F Type Pressure Reducing Valve (for Steam)

NOMINAL DIAMETER SELECTION CHART (For saturated steam)

[Rate Flow Chart]

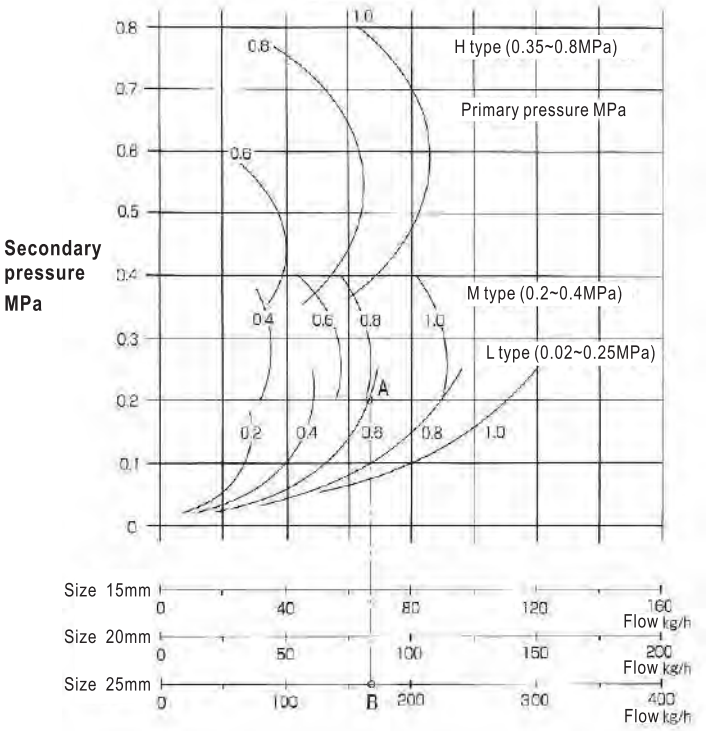

[Open Flow Chart]

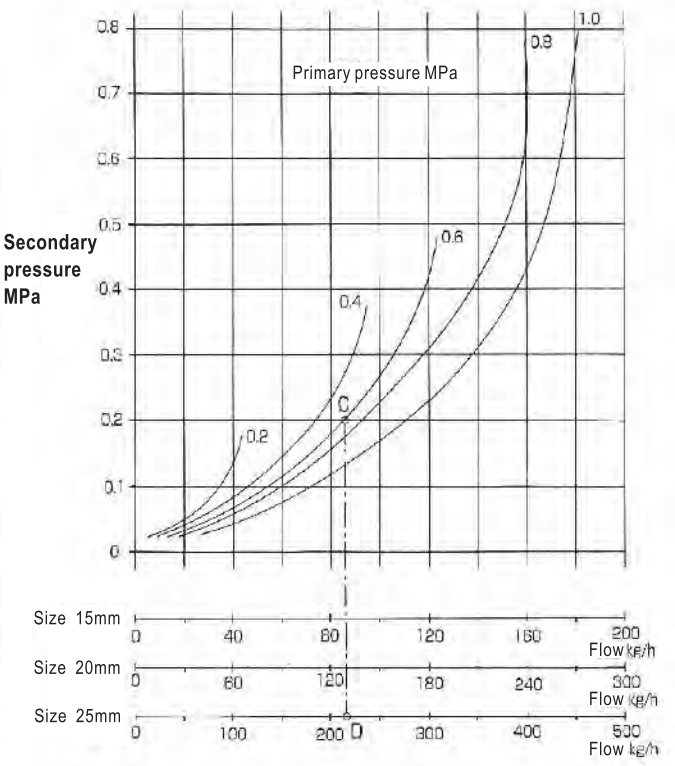

● **Offset pressure of rated flow** (MPa)

Set pressure	Offset pressure
0.13 or less	Set pressure × within 0.5
Over 0.13~0.4	Within 0.07
Over 0.4~0.8	Within 0.12

Opening flow

Opening flow is the full opening flow of the stop valve at the secondary side when the diameter of the secondary piping is the same as that of pressure reducing valve.

Note: At opening flow, the secondary pressure reduces significantly.

HOW TO USE THE CHART

Example (conditions):
Primary pressure:0.6MPa
Secondary pressure:0.2MPa
Saturated steam: 100kg/h

Generally, the nominal diameter can be decided using the Rated Flow Chart.

- Find out the intersection point A between primary pressure 0.6MPa and secondary pressure 0.2MPa.
- Draw a vertical line from point A. The line intersects with the flow 100kg/h line. From the intersection point B, we can find the desired nominal diameter, or size, i.e. 25mm.

To decide the flow necessary for starting up a machine, use the Open Flow Chart.

- Under the same pressure condition above mentioned, the open flow of size 25mm valve can be determined using intersection points C and D. In this case, the open flow is 215kg/h.

Machine heat and the secondary pressure of pressure reducing valve

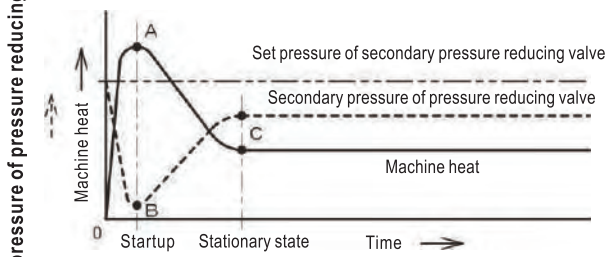

A: Maximum heat at startup (the point of flow when pressure reducing valve opens)
B: Minimum secondary pressure of pressure reducing valve (the time when pressure reducing valve opens)
C: The point when machine heat and the secondary pressure of pressure reducing valve become stable.

RD-30 Type Pressure Reducing Valve (for Steam)

for Building Equipments, Factory Equipments, etc. General-purpose Direct Acting Valves (small/medium capacity)

Direct operated type pressure reducing valve with diaphragm made of special synthesized rubber. Suitable for a variety of applications from small to large flow for piping lines, steam equipments etc.



FEATURES

- Stable operation in small flow applications which are not controllable using pilot-operated type PRVs and large flow applications.
- Structure which is not influenced by foreign materials easily and easy maintenance.

SPECIFICATIONS

Model name	RD-30	
Code name	RD30-GL	RD30-GH
Applicable fluid	Steam	
Fluid temperature	Max. 184℃	
Applicable primary pressure	Max. 1.0MPa	
Adjustable secondary pressure	0.02~0.2MPa	0.15~0.4MPa
Maximum reducing rate	20:1	
Minimum pressure differential across the disc	0.02MPa	
Lock up pressure	Max. 0.02MPa	
Offset pressure	Within 0.045MPa However in cass of set pressure at 0.08MPa or less: Set pressure×0.5 or less	Within 0.06MPa
Leakage allowance	Less than 0.05% of rated flow	
End connection	Screwed JIS Rc	
Materials	Body (Cast iron), Disc & seat (Stainless steel), Diaphragm (Synthetic rubber)	
Valve body pressure test	Hydraulic 1.5MPa	

DIMENSIONS

(mm)

Size	d	L	G	H	Mass (kg)
15(½″)	½″	110	57	202	5
20(¾″)	¾″	110	57	202	5
25(1″)	1″	120	63	219	6.5
32(1¼″)	1¼″	150	78	274	12
40(1½″)	1½″	150	78	274	12

CONSTRUCTION

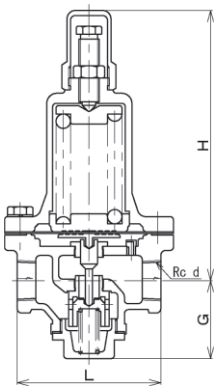

NOMINAL DIAMETER SELECTION CHART (For saturated steam)

Example (conditions):
- Primary pressure: 0.5MPa
- Secondary pressure: 0.2MPa
- Saturated steam: 205kg/h

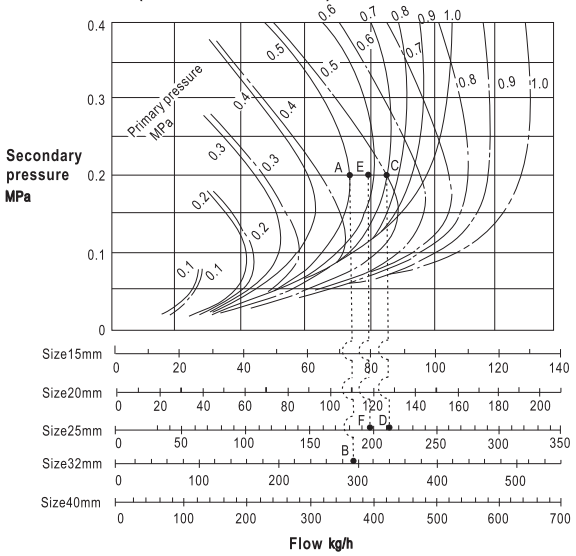

How to use the chart

The flow increases when selecting a larger diameter for the secondary piping.

❶ Secondary piping diameter

Types of primary pressure line

Solid line (————): The secondary piping diameter is the same as that of pressure reducing valve.

Dashed line (— · —): The secondary piping diameter is 2 sizes larger than that of pressure reducing valve.

❷ The secondary piping diameter is the same as that of pressure reducing valve

① Find out the intersection point A between primary pressure 0.5MPa line (solid line) and secondary pressure 0.2MPa line.

② Draw a vertical line from point A until the line intersects with the flow 205kg/h line. From the intersection point B, it is able to determine the nominal diameter, which is size 32mm in this case.

❸ The secondary piping diameter is 2 sizes larger than that of pressure reducing valve

① Find out the intersection point C between primary pressure 0.5MPa line (dash line) and secondary pressure 0.2MPa line.

② Draw a vertical line from point C until the line intersects with the flow 205kg/h line. From the intersection point D, it is able to determine the nominal diameter, which is size 25mm (size 40mm for the secondary piping diameter).

- In the above example, the flow at point D is 213kg/h, which is larger than the necessary flow (205kg/h). It is necessary to check whether the necessary flow can be satisfied when the secondary piping diameter is 1 size larger. When the secondary piping diameter is 1 size larger, draw a vertical line from point E (the median point between points A and C) until it intersects with the nominal diameter size 25mm line. From the intersection point F, it is able to find out the flow 196kg/h, which is insufficient in this case.

RD-3H Type Series Pressure Reducing Valve (for Steam or Gases, Liquids)

Directly operated pressure reducing valves with good pressure control, wide range of pressure adjustment, and disc & seat stainless steel (for steam). Suitable for small flow applications that are not controllable using pilot-operating valves.RD-3H and RD-3HF Type are for steam use.RD-3HA and RD-3HAF Type are for air and gases.



RD-3H, 3HA Type



RD-3HF, 3HAF Type

SPECIFICATIONS

Model name		RD-3H	RD-3HF	RD-3HA	RD-3HAF
Code name		**RD3H-GH**	**RD3HF-GH**	**RD3HA-BH**	**RD3HAF-BH**
End connection		Screwed JIS Rc	Flanged JIS 10KRF	Screwed JIS Rc	Flanged JIS 10KRF
Applicable fluid		Steam		Air, gases & liquids	
Applicable temperature		Max. 184℃*1.		5~80℃	
Fluid viscosity		—		Max. 150cSt	
Applicable primary pressure		Max. 1.0MPa			
Adjustable secondary pressure		0.035~0.5MPa*2.			
Maximum reducing rate		15:1			
Minimum pressure differential across the disc		0.02MPa			
Lock up pressure		Max. 0.02MPa			
Leakage allowance		Less than 0.05% of rated flow		Nil(Confirm at pressure gauge)	
Materials	Body & seat ring	Body(Cast iron),Seat ring(Stainless steel)			
	Disc	Stainless steel		Brass with synthetic rubber heat treatment*3	
Valve body pressure test		Hydraulic 1.5MPa			

*1. Applicable temperature Max.220℃ is available upon your request.
*2. Adjustable secondary pressure 0.02~0.1MPa is available upon request.
*3. Disc with stainless steel with synthetic rubber is also avaiable upon you request.

DIMENSIONS

(mm)

Size	Cv value	RD-3H, 3HA Type		RD-3HF, 3HAF Type	
		d	Mass(kg)	L	Mass(kg)
15(½″)	0.8	½″	4.1	186	5.7
20(¾″)	0.8	¾″	4.1	190	6.1
25(1″)	1	1″	4.2	190	7.2

CONSTRUCTION

RD-3H Type

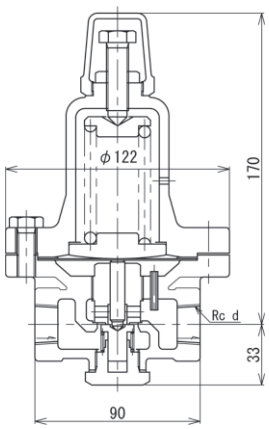

RD-3HF Type

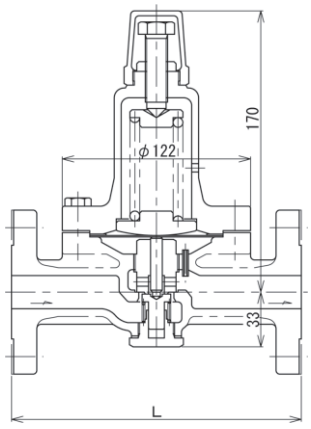

RD-3HA Type
RD-3HAF Type

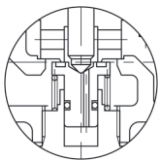

PIPING EXAMPLE

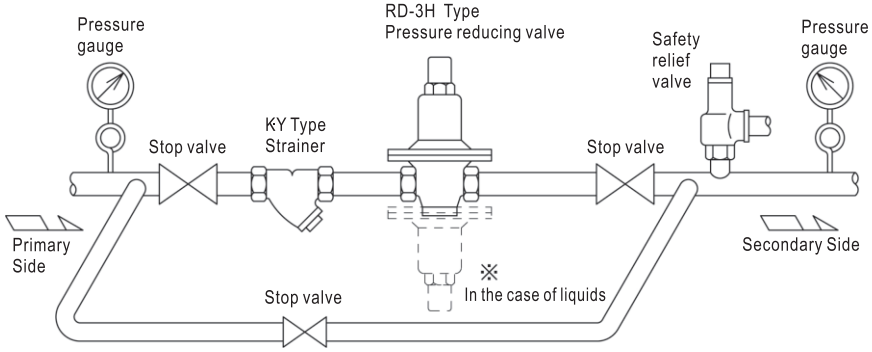

※In the case of liquid, turn upside down.

DATA/RD-3H Type Series Pressure Reducing Valve (for Steam or Gases, Liquids)

RD-3H, 3HF TYPE NOMINAL DIAMETER SELECTION CHART (for Steam)

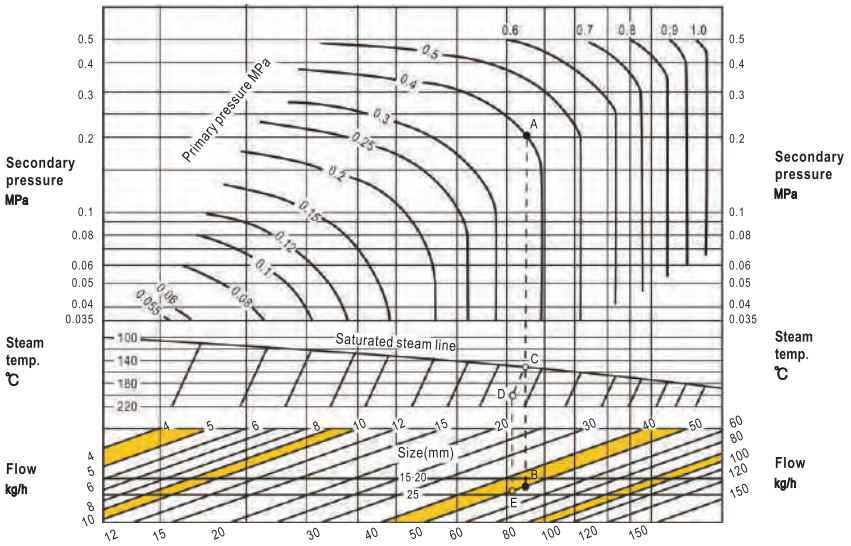

● HOW TO USE THE CHART

This example shows you how to decide nominal diameter of valve at the following conditions: primary pressure 0.4MPa, secondary pressure 0.2MPa, flow of saturated steam 50 kg/h.

First, find out the intersection point A of primary pressure curve 0.4MPa and secondary pressure curve 0.2MPa.

Draw a vertical line from point A. This line intersects with flow curve 50kg/h. The intersection point is B. Since B is located between a nominal diameter range of 15/20mm and 25mm. The larger value, which is 25mm, is taken as the nominal diameter that we are looking for.Now let's find out the nominal diameter at an additional.

Condition: the temperature is 200°C. Draw a vertical line from point A until it intersects with the saturated steam curve. The intersection point is named C. Now move from point C to temperature curve 200℃ parallelly and we can stop at point D. Draw a vertical line from point D until it intersects with flow curve 50kg/h. the intersection point is named E. Since point E is located between a nominal diameter range of 15/20mm and 25mm. The larger value, which is 25mm, is taken as the nominal diameter that we are looking for.

RD-3HA, 3HAF TYPE NOMINAL DIAMETER SELECTION CHART (for Air)

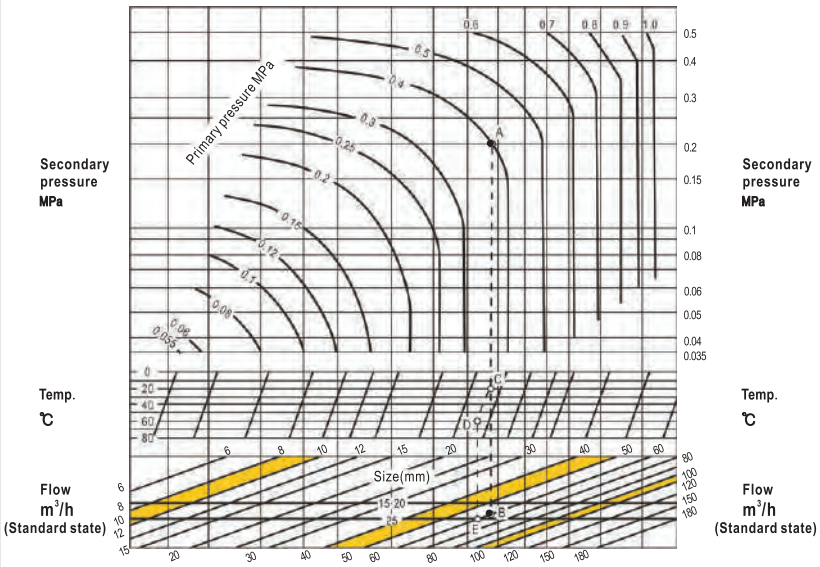

● HOW TO USE THE CHART

Example: Find out the nominal diameter meeting the following conditions: Primary pressure: 0.4MPa, Secondary pressure: 0.2MPa, Temperature: 20℃, Flow: 60m³/h

First, find out the intersection point A of primary pressure curve 0.4MPa and secondary pressure curve 0.2MPa.

Draw a vertical line from point A. This line intersects with flow curve 60m³/h. The intersection point is B. Since B is located between a nominal diameter range of 15/20mm and 25mm. The larger value, which is 25mm is taken as the nominal diameter that we are looking for. Now let's find out the nominal diameter at an additional.

Condition: the temperature is 60°C. Draw a vertical line from point A until it intersects with the saturated steam curve. The intersection point is named C. Now move from point C to temperature curve 20℃ parallelly and we can stop at point D. Draw a vertical line from point D until it intersects with flow curve 60m³/h. the intersection point is named E. Since point E is located between a nominal diameter range of 15/20mm and 25mm. The larger value, which is 25mm, is taken as the nominal diameter that we are looking for.(Note: the flow is standard flow)

RD-3HA, 3HAF TYPE NOMINAL DIAMETER SELECTION CHART (for Liquids)

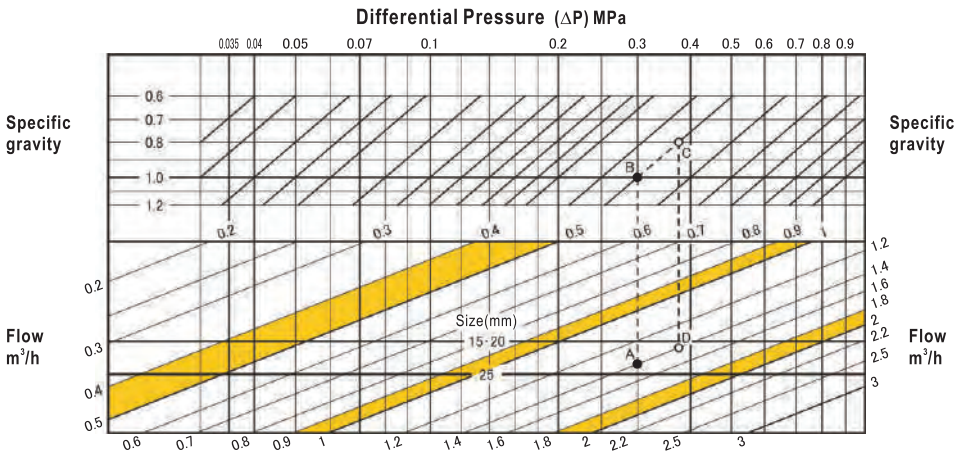

● HOW TO USE THE CHART

Example: Find out the nominal diameter meeting the following conditions: Primary pressure: 0.5MPa, Secondary pressure: 0.2MPa, Specific gravity: 1 (water), Flow: 1.4m³/h, Differential pressure (ΔP): 0.5−0.2=0.3MPa

Find out the intersection point A between the 0.3MPa differential pressure (ΔP) line and the 1.4m³/h flow line. Since point A is between the lines representing nominal diameter 15/20mm and 25mm, the nominal diameter should be the larger one, i.e., 25mm.

In the case that other conditions remain the same but the specific gravity is 0.8, find out the intersection point B between the 0.3MPa differential pressure (ΔP) line and the 1.0 specific gravity line. Move from point B on the 0.8 specific gravity line parallelly to reach point C. Now draw a vertical line from point C until it intersects with the 1.4m³/h flow line. The intersection point is named D. since point D is located between the lines representing nominal diameter 15/20mm and 25mm, the nominal diameter should be the larger one, i.e., 25mm.

RD-29A, 29B Type Pressure Reducing Valve (for Low Pressure Gases)

Direct operated type pressure reducing valves for low pressure applications in chemical and steel plants. With embedded dual detecting devices, it is not necessary to install detecting pipes. In addition, these valves allow small pressure control with different differential pressures.



FEATURES

- Maximum reducing rate 300:1. (e.g. reduce pressure from 300kPa to 1kPa)
- No leakage through disc and seat ring due to single seat valve.
- Most suitable pressure balance construction must be selected depending on fluid.

SPECIFICATIONS

Model name	RD-29A	RD-29B
Code name	**RD29A-G☐**	**RD29B-G☐**
	※L,M or H for adjustable secondary pressure is required in☐.	
Applicable fluid	Air, N_2 gas & non-corrosive gases	Coke oven gas & containing tar
Fluid temperature	5~60℃	
Applicable primary pressure	Max. 300kPa	
Adjustable secondary pressure	**L:1~3kPa (Offset, Within 0.9kPa), M:3~10kPa (Offset, Within 1.5kPa), H:10~30kPa (Offset, Within 4.5kPa)**	
Maximum reducing rate	300:1	
Minimum pressure differential across the disc	2kPa	
Lock up pressure	Max. 2kPa	
Minimum adjustable flow	2~5m³/h(Standard state)	
Leakage allowance	Nil (Confirm at pressure gauge)	
End connection	Flanged JIS 10KRF	
Materials	Body (Cast iron),Disc & seat ring(Stainless steel), Diaphragm & disc tip(Synthetic rubber)	
Valve body pressure test	Hydraulic 1.0MPa(Excluding actuator)*	
Airtight test	Primary side:300kPa Secondary side:	

Adjustable secondary pressure range	Airtight test
L:1-3kPa	5kPa
M:3-10kPa	12kPa
H:10-30kPa	32kPa

*Adding of pressure exceeding hydraulic test and airtight test pressure may damage the pressure reducing valve.

CONSTRUCTION

RD-29A Type — O-ring sealed pressure balance construction

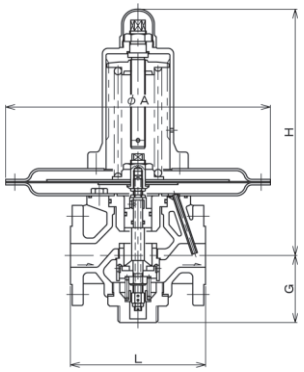

RD-29B Type — Bellophragm seal pressure balance construction

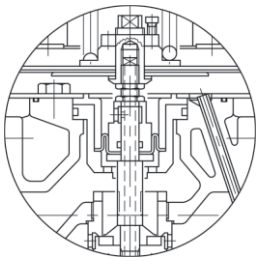

DIMENSIONS

(mm)

Size	L	A	G	H	Mass (kg)
15(½″)	170	360	75	323	21
20(¾″)	170	360	75	323	22
25(1″)	170	360	75	323	22
32(1¼″)	190	360	85	333	27
40(1½″)	190	360	85	333	27
50(2″)	240	360	95	343	32

Flange code JIS 10KRF

PIPING EXAMPLE

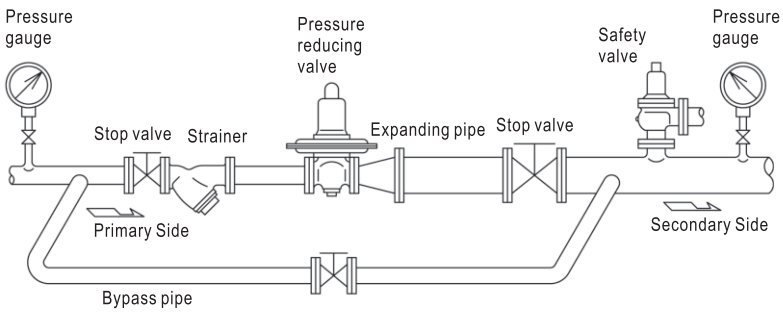

NOMINAL DIAMETER SELECTION CHART (for Air)

- The flow characteristics are based on air (standard state).
- Flow rate of gas with specific gravity (G) which is different from that of air should be converted to air flow rate:

$$\text{Converted air flow rate} = \text{gas flow rate} \times \sqrt{G}$$

$$= \text{gas flow rate} \times \sqrt{\frac{M}{28.96}}$$

Where:
G: Specific gravity (air: 1)
M: Molecular weight of gas
(Please see the M: Molecular weight of gas in Page 279)

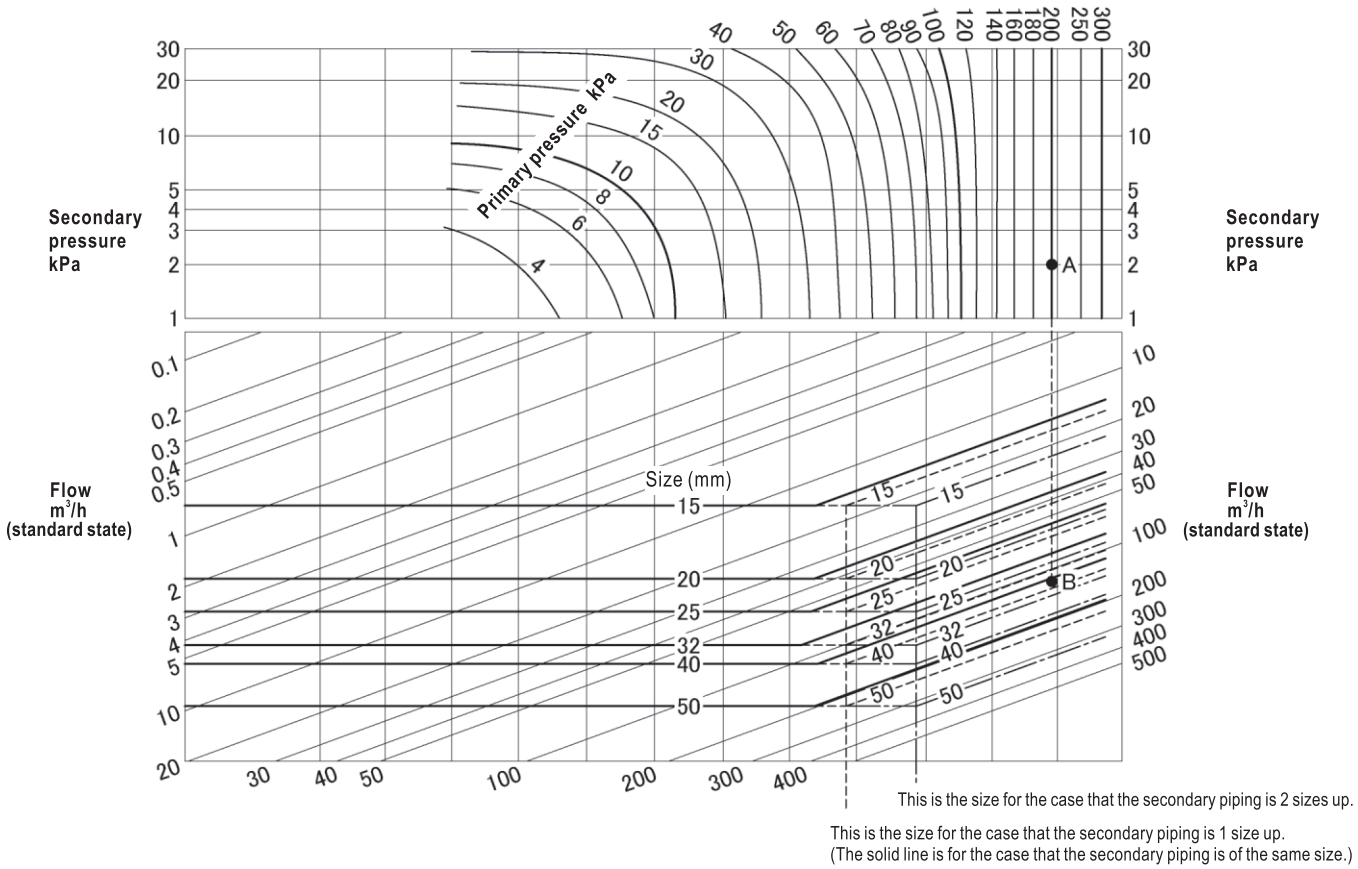

How to use the chart

Example: find out the nominal diameter meeting the following conditions.
Fluid: air
Primary pressure: 200kPa
Secondary pressure: 2kPa
Temperature: 20℃
Flow: 120m³/h (standard state)

1) First, find out the intersection point A of primary pressure curve 200kPa and secondary pressure curve 2kPa.
2) Draw a vertical line from point A. This line intersects with flow curve 120m³/h. The intersection point is B.
3) When the secondary piping diameter is the same as that of pressure reducing valve, the nominal diameter line is a solid line (———). Since point B is between size 40mm and size 50mm lines, the larger one, which is size 50mm, is selected.
4) When the secondary piping diameter is 1 size larger than the diameter of pressure reducing valve, the nominal diameter line is a dashed line(- - - - -). Since point B is between size 32mm and size 40mm lines, the larger one, which is size 40mm, is selected as the nominal diameter. The secondary piping diameter, which is 1 size larger than the diameter of pressure reducing valve, is thus size 50mm.
5) When the secondary piping diameter is 1 size larger than the diameter of pressure reducing valve, the nominal diameter line is a dotted and dashed line (—・—).Since point B is between size 25mm and size 32mm lines, the larger one, which is size 32mm, is selected as the nominal diameter. The secondary piping diameter, which is 2 size larger than the diameter of pressure reducing valve, is thus size 50mm.

- The rated flow of pressure reducing valve depends on pressure condition. In this chart, the flows at the intersection points of nominal diameter lines are the rated flows of pressure reducing valve at relevant pressure conditions.
  The flow of gases other than air can be calculated by converting air flow.
  Air flow/conversion factor = Flow of gas

PRESSURE REDUCING VALVES [FOR WATER OR LIQUIDS] WATER HAMMER ARRESTOR

2

VENN pressure reducing valves are manufactured based on our years of experience in this industry and advanced technology. The extensive lineup of our products can meet the needs of liquid or pressure applications in construction, factory and a variety of other areas.

You can select the most suitable valve model, considering the various conditions of the application to use.

■ Pressure Reducing Valves

Model name	Size	Applicable fluid	Applicable pressure (MPa)		Materials		Page
			Primary side	Secondary side	Body	Disc & seat	
RD-31N	15~50 (½″~2″)	Water or hot water	Max. 1.0	0.05~0.7	Cast bronze	Cast bronze & Synthetic rubber	36
RD-31FN	25~50 (1″~2″)						
RD-33FN	65~150 (2½″~6″)						
RD-32N	15~50 (½″~2″)	Water or hot water	Max. 1.6	0.05~0.7	Cast bronze	Cast bronze & Synthetic rubber	37
RD-32FN	25~50 (1″~2″)						
RD-34FN	65~100 (2½″~4″)						
RD-35	15~40 (½″~1½″)	Water & liquids	Max. 1.0	0.05~0.7	Stainless steel	Stainless steel & Synthetic rubber	38
RD-35F	25~100 (1″~4″)						
RD-36	15~40 (½″~1½″)		Max. 1.6				
RD-36F	25~100 (1″~4″)						
RD-37	15~40 (½″~1½″)	Water & liquids	Max. 1.0	0.05~0.7	Stainless steel	Stainless steel & Synthetic rubber	39
RD-37F	25~50 (1″~2″)						
RD-38	15~40 (½″~1½″)		Max. 1.6				
RD-38F	25~50 (1″~2″)						
RD-44N	20 (¾″)	Water or hot water	Max. 1.0	0.05~0.3	Cast bronze	Synthetic rubber	43
RD-43N	15・20 (½″・¾″)	Water or hot water	Max. 1.0	0.05~0.3			44
RD-47N	25 (1″)	Water or hot water	Max. 1.0	0.05~0.35			45
RD-14W	15~150 (½″~6″)	Water, hot water or air	Max. 1.0	0.05~0.7	Cast iron	Cast bronze & Synthetic rubber	46
RD-14H							
RD-14CN							
WVR-02	40~400 (1½″~16″)	Water	Max. 1.0 (Max. 1.6)	0.05~1.0	Cast iron or Ductile cast iron	Cast bronze & Synthetic rubber	50
WVR-02CN	80~200 (3″~8″)						
RD-16	20~50 (¾″~2″)	Water & liquids	Max. 2.7	0.05~0.7	Cast steel	Stainless steel & Synthetic rubber	53
RD-17	20~150 (¾″~6″)	Water & liquids	Max. 3.0	0.7~1.4	Cast steel	Stainless steel & Synthetic rubber	54
RD-17A			Max. 2.7	0.2~0.7			
RD-7	10・15 (⅜″・½″)	Fuel oil	Max. 1.0	0.01~0.2	Cast iron	Brass & Viton O ring	56
RD-20	15~25 (½″~1″)	Liquids, air or gases	Max. 2.0	0.02~0.5	Stainless steel	Stainless steel & Synthetic rubber	58
RD-20F							

■ Water Hammer Arrestor

Model name	Size	Applicable fluid	Applicable pressure(MPa)	Materials		Page
				Body	Disc & seat	
WHA-3	15・20 (½″・¾″)	Water	Max. 0.98	Stainless steel	Synthetic rubber	57

RD-31N, 31FN, 33FN Type Pressure Reducing Valve (for Water, Hot Water or Air)

for Building and Factory Equipments ,etc.,Direct Operation, General-purpose Valves

(Bronze body, medium capacity)

Bronze valves meet the demand of the time.
Designed based on our technology for making quality pressure reducing valves, which are highly evaluated by our customers, these valves are more reliable, easier to control and use, and particularly, they do not allow rust in the entire piping line, including pipe joints. Using these pipes, you do not need to worry about the occurrence of the red water (rusty water). Ideal for applications in building, house, factory, boiler and water supply equipments.



Screw Type



Flange Type

FEATURES

- Bronze body prevents occurrence of rusty water.
- Low noise design.
- 50% smaller, lighter than traditional cast iron products.
- No water leakage even if the diaphragm is broken.
- Flexible installation (except that the strainer cap face upwardly ※3).
- Strainer embedded (40 meshes for nominal diameter smaller than size 50mm).

SPECIFICATIONS

Model name	RD-31N L/H	RD-31FN L/H	RD-33FN L/H
Code name	**RD31N-F□**	**RD31FN-F□**	**RD33FN-F□**
	※L (low press.) or H (high press.) for adjustable secondary pressure is required in □.		
Size	15~50(½″~2″)	25~50(1″~2″)	65~150(2½″~6″)
End connection	Screwed JIS Rc	Flanged JIS 10KFF	
Applicable primary pressure	Max. 1.0MPa		
Applicable fluid	Water, hot water, air*2 & inert gases*2.		
Fluid temperature	5~90℃		
Adjustable secondary pressure	**Size 15~100mm L:0.05~0.35MPa, H:0.3~0.7MPa** **Size 125~150mm L:0.05~0.35MPa, H:0.3~0.5MPa**		
Maximum reducing rate	10:1		
Minimum pressure differential across the disc	0.05MPa		
Leakage allowance	Nil(Confirm at pressure gauge)		
Materials	Body(Cast bronze), Trim(Cast bronze), Diaphragm & disc(Synthetic rubber) Spring case(Size 15~50mm:Cast zinc, Size 65~150mm:Cast iron)		
Valve body pressure test	Hydraulic 1.75MPa		

*1. Valves with pressure gauge is also available upon your request.(Secondary side)
*2. Size 100mm or smaller can be used in inert gases line.
*3. The size for vertical pipeline is up to 80mm. And there should be a relatively large space for maintenance.
(Valves above 100mm in size should be installed to horizontal pipe vertically.)

DIMENSIONS (RD-31N Type)

(mm)

Size	d	L	G	H	A	Mass (kg)
15(½″)	½″	125	41	140	100	2.2
20(¾″)	¾″	130	41	140	100	2.3
25(1″)	1″	145	41	141	100	2.6
32(1¼″)	1¼″	175	50	187	116	4.9
40(1½″)	1½″	180	50	187	116	5.1
50(2″)	2″	205	50	206	142	7.5

DIMENSIONS (RD-31FN, 33FN Type)

(mm)

Size	L	G	H	A	Mass(kg)
25(1″)	170	41	141	100	5.3
32(1¼″)	190	50	187	116	8.3
40(1½″)	190	50	187	116	8.6
50(2″)	215	50	206	142	12
65(2½″)	215	70	280	162	22
80(3″)	230	70	285	162	22
100(4″)	260	78	345	201	35
125(5″)	330	105	490	250	64
150(6″)	400	130	660	340	126

Flange code JIS 10KFF

CONSTRUCTION

RD-31N Type

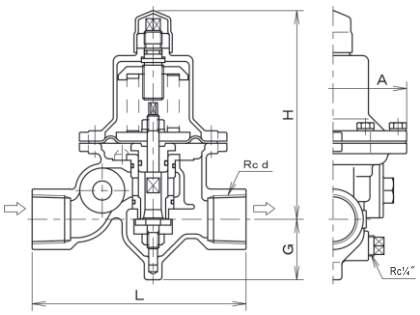

RD-31FN Type

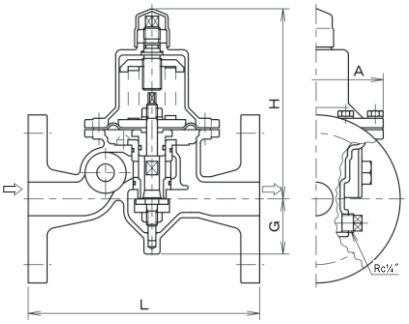

RD-33FN Type

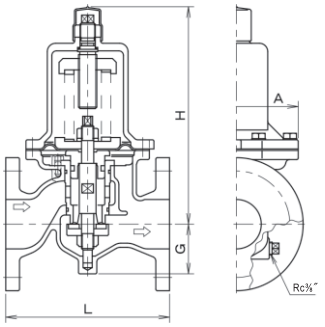

RD-32N, 32FN, 34FN Type Pressure Reducing Valve (for Water or Hot Water)

for Building and Factory Equipments ,etc.,Direct Operation, General-purpose Valves

(Bronze body, medium capacity)

Bronze valves meet the demand of the time.
Designed based on our technology for making quality pressure reducing valves, which are highly evaluated by our customers, these valves are more reliable, easier to control and use, and particularly, they do not allow rust in the entire piping line, including pipe joints. Using these pipes, you do not need to worry about the occurrence of the red water (rusty water). Ideal for applications in building, house, factory, boiler and water supply equipments.



Screw Type



Flange Type

FEATURES

- Bronze body prevents occurrence of rusty water.
- Low noise design.
- 50% smaller, lighter than traditional cast iron products.
- No water leakage even if the diaphragm is broken.
- Flexible installation (except that the strainer cap face upwardly※2).
- Strainer embedded (40 meshes for nominal diameter less than size 50mm).

SPECIFICATIONS

Model name	RD-32N L/H	RD-32FN L/H	RD-34FN L/H
Code name	**RD32N-F ☐**	**RD32FN-F ☐**	**RD34FN-F ☐**
	※ L (low press.) or H (high press.) for adjustable secondary pressure is required in ☐.		
Size	15~50(½″~2″)	25~50(1″~2″)	65~100(2½″~4″)
End connection	Screwed JIS Rc	Flanged JIS 16KFF	
Applicable primary pressure	Max. 1.6MPa		
Fluid temperature	Water & hot water		
Applicable temperature	5~90℃		
Adjustable secondary pressure	**L:0.05~0.35MPa, H:0.3~0.7MPa**		
Maximum reducing rate	10:1		
Minimum pressure differential across the disc	0.05MPa		
Leakage allowance	Nil(Confirm at pressure gauge)		
Materials	Body(Cast bronze), Trim(Cast bronze), Diaphragm & disc(Synthetic rubber) Spring case(Size 15~50mm:Cast zinc, Size 65~100mm:Cast iron)		
Valve body pressure test	Hydraulic 2.4MPa		

∗1. Valves with pressure gauge are also available upon your request.
∗2. The size for installation on vertical pipeline is up to 80mm. And there should be a relatively large space for maintenance.
(Valves above 100mm in size should be installed to horizontal pipe vertically.)

DIMENSIONS(RD-32N Type)

(mm)

Size	d	L	G	H	A	Mass(kg)
15(½″)	½″	125	41	140	100	2.2
20(¾″)	¾″	130	41	140	100	2.3
25(1″)	1″	145	41	141	100	2.6
32(1¼″)	1¼″	175	50	187	116	4.9
40(1½″)	1½″	180	50	187	116	5.1
50(2″)	2″	205	50	206	142	7.5

DIMENSIONS(RD-32FN,34FN Type)

(mm)

Size	L	G	H	A	Mass(kg)
25(1″)	170	41	141	100	5.3
32(1¼″)	190	50	187	116	8.3
40(1½″)	190	50	187	116	8.6
50(2″)	230	50	206	142	12
65(2½″)	215	70	280	162	22
80(3″)	260	70	285	162	29
100(4″)	300	78	345	201	39

Flange code JIS 16KFF

CONSTRUCTION

RD-32N Type

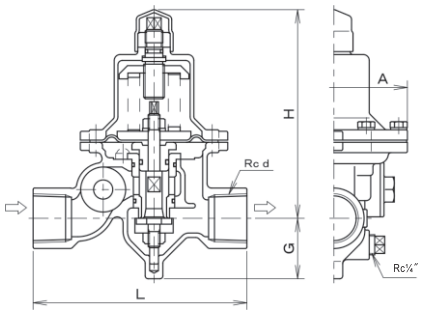

RD-32FN Type

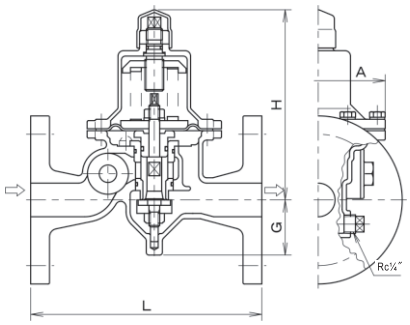

RD-34FN Type

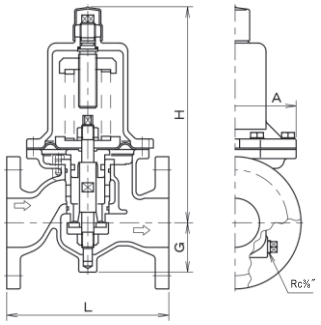

RD-35 ~ 36F Type Pressure Reducing Valve (for Water, Hot Water or Air)

Pressure reducing valves for water, with stainless body and disc & seat made of stainless steel.
High controllability, reliability, corrosion resistance. Suitable for applications in plants.



Screw Type



Flange Type

FEATURES

- The stainless steel valve body repels rusty water, and suitable for the usage in the stainless steel pipeline.
- Low noise design.
- 50% smaller, lighter than traditional cast iron.
- No water leakage even if the diaphragm is broken.
- Flexible installation※2.
- Allows direct installation of pressure gauge on the body (only for the secondary side).

SPECIFICATIONS

Type	For pressure of less than 1.0MPa		For pressure of less than 1.6MPa	
Model name	RD-35 L/H	RD-35F L/H	RD-36 L/H	RD-36F L/H
Code name	**RD35-D ☐**	**R35F-D ☐**	**RD36-D ☐**	**RD36F-D ☐**
	※ L (low press.) or H (high press.) for adjustable secondary pressure is required in ☐.			
Size	15~40(½″~1½″)	25~100(1″~4″)	15~40(½″~1½″)	25~100(1″~4″)
End connection	Screwed JIS Rc	Flanged JIS10KFF	Screwed JIS Rc	Flanged JIS16KFF
Applicable primary pressure	Max. 1.0MPa		Max. 1.6MPa	
Applicable fluid	Water, hot water, air & inert gases		Water & hot water	
Fluid temperature	5~90℃			
Adjustable secondary pressure	**L:0.05~0.35MPa, H:0.3~0.7MPa**			
Maximum reducing rate	10:1			
Minimum pressure differential across the disc	0.05MPa			
Leakage allowance	Nil(Confirm at pressure gauge)			
Materials	Body(Stainless steel), Trim(Stainless steel), Diaphragm & disc(Synthetic rubber) Spring case(Size 15~50mm:Cast zinc, Size 65~100mm:Cast iron)			
Valve body pressure test	Hydraulic 1.75MPa		Hydraulic 2.4MPa	

∗1. Valves with pressure gauge are also available.(Secondary side)
∗2. The size for installation on vertical pipeline is up to 80mm. And there should be a relatively large space for maintenance.
(Valves above 100mm in size should be installed to horizontal pipe vertically.)
∗3. RD-35 and 35F Types with Max. 130℃ for cleaning steam in temporary use at beverage industry,etc. are available upon your request.

DIMENSIONS(RD-35, 36 Type)

(mm)

Size	d	L	G	H	A	Mass(kg)
15(½″)	½″	130	41	140	100	2.5
20(¾″)	¾″	130	41	140	100	2.5
25(1″)	1″	130	41	141	100	2.6
32(1¼″)	1¼″	150	50	187	116	4.8
40(1½″)	1½″	150	50	187	116	4.8

DIMENSIONS(RD-35F, 36F Type)

(mm)

Size	d	L	G	H	A	Mass(kg)
25(1″)	¼″	160	41	141	100	5.1
32(1¼″)	¼″	160	50	187	116	7.2
40(1½″)	¼″	160	50	187	116	7.8
50(2″)	¼″	210	50	206	142	12
65(2½″)	⅜″	215	70	280	162	20
80(3″)	⅜″	260(264)	70	285	162	23(25)
100(4″)	⅜″	300(308)	78	345	201	36(40)

∗ Figures in ( ) are for RD-36F Type. Other figures are common to all types.

Flange code JIS 10(16)KFF

CONSTRUCTION

RD-35, 36 Type

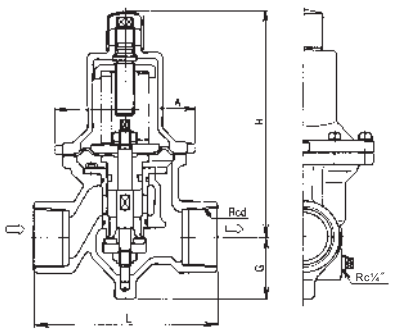

RD-35F, 36F Type

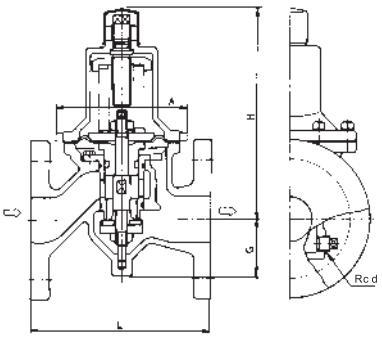

※ The structure of the valve may be different depending on sizes.

RD-37 ~38F Type Pressure Reducing Valve (for Water, Hot Water, Air or Medical Fluid)

Pressure reducing valves for water, with stainless steel body and disc & seat made of stainless steel.

High controllability, reliability, corrosion resistance. Suitable for applications in plants.



Screw type



Flange type

FEATURES

- Stainless steel spring and spring case. Suitable for medicinal solution.
- Low noise design.
- No water leakage even if the diaphragm is broken.
- Flexible installation※2.
- Allows direct installation of pressure gauge on the body (only for the secondary side).

SPECIFICATIONS

Type	For pressure of less than 1.0MPa		For pressure of less than 1.6MPa	
Model name	RD-37 L/H	RD-37F L/H	RD-38 L/H	RD-38F L/H
Code name	**RD37-D ☐**	**RD37F-D ☐**	**RD38-D ☐**	**RD38F-D ☐**
	※ L (low press.) or H (high press.) for adjustable secondary pressure is required in ☐.			
Size	15~40(½″~1½″)	25~50(1″~2″)	15~40(½″~1½″)	25~50(1″~2″)
End connection	Screwed JIS Rc	Flanged JIS10KFF	Screwed JIS Rc	Flanged JIS16KFF
Applicable primary pressure	Max. 1.0MPa		Max. 1.6MPa	
Applicable fluid	Water, hot water, air, inert gases & medical fluid		Water, hot water & medical fluid	
Fluid temperature	5~90℃			
Adjustable secondary pressure	**L:0.05~0.35MPa, H:0.3~0.7MPa**			
Maximum reducing rate	10:1			
Minimum pressure differential across the disc	0.05MPa			
Leakage allowance	Nil(Confirm at pressure gauge)			
Materials	Body(Stainless steel), Trims(Stainless steel) Diaphragm(Synthetic rubber), Spring case(Stainless steel)			
Valve body pressure test	Hydraulic 1.75MPa		Hydraulic 2.4MPa	

∗1. Valves with pressure gauge are also available upon your request.
∗2. In case of installation on the vertical pipeline, make sure to apply large space for maintenance.
∗3. RD-37 and 37F Types with Max. 130℃ for cleaning steam in temporary use at beverage industry, etc. are available upon your request.

DIMENSIONS (RD-37, 38 Type)

(mm)

Size	d	L	G	H	A	Mass(kg)
15(½″)	½″	130	41	194	100	3.4
20(¾″)	¾″	130	41	194	100	3.4
25(1″)	1″	130	41	195	100	3.7
32(1¼″)	1¼″	150	50	245	116	6.4
40(1½″)	1½″	150	50	245	116	6.4

DIMENSIONS(RD-37F, 38F Type)

(mm)

Size	L	G	H	A	Mass(kg)
25(1″)	160	41	195	100	6.1
32(1¼″)	160	50	245	116	9.2
40(1½″)	160	50	245	116	9.4
50(2″)	210	50	320	142	15

Flange code JIS 10(16)KFF

CONSTRUCTION

RD-37, 38 Type

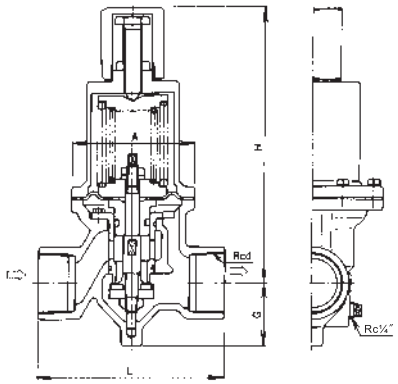

RD-37F, 38F Type

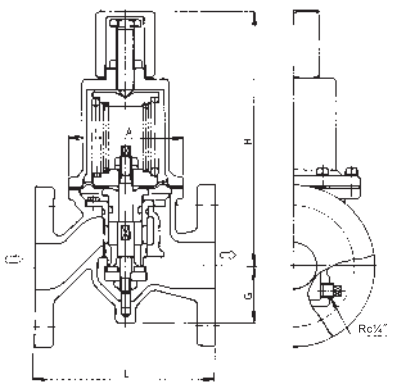

※ The structure of the valve may be different depending on sizes.

DATA/RD-31N ~ 38F Type Pressure Reducing Valve (for Water, Hot Water, Air or Liquids)

OFFSET PRESSURE CHARACTERISTICS

Offset pressure: The difference between secondary pressure and set pressure when flow increases from zero to rated flow but the primary pressure maintains the same.

(For details, see Flow Characteristics)

Spring range L : 0.05~0.35MPa

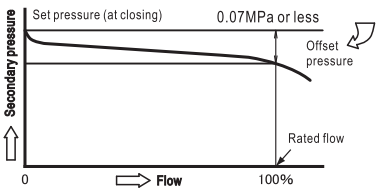

Spring range H:Size≦100mm: 0.3~0.7MPa
Size 125mm, 150mm: 0.3~0.5MPa

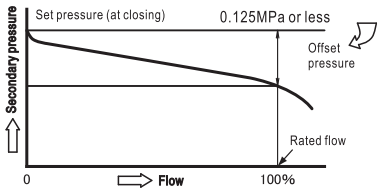

RATED FLOW (Water and Liquids)

Pressure differential across the disc: More than 0.15MPa

Size(mm)	15	20	25	32	40	50	65	80	100	125	150
Rated flow(L/min)	20	40	60	100	150	240	300	440	700	1200	1800

In case that pressure difference is less than 0.15MPa, the rated flow will be calculated by 「rated flow × $\sqrt{\frac{\Delta P}{0.15}}$ 」

PRESSURE CHARACTERISTICS

Pressure characteristics show the change of the secondary pressure when flow remains the same but the primary pressure changes. In the figure on the right, the secondary pressure is set to be 0.1MPa when flow is 0 and the primary pressure is 0.6MPa. It shows the change of the secondary pressure when the flow is 10% rated flow and the primary pressure changes from 0.6~0.15~1.0~0.6MPa.

Change of the Secondary pressure = Set pressure × 10% or less (minimum 0.02MPa)

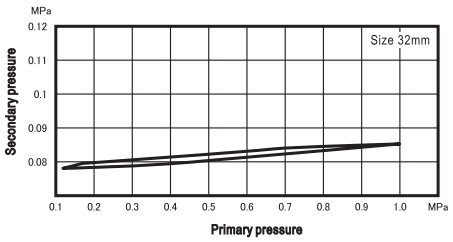

NOISE CHARACTERISTICS

Noise characteristics show the noise at each different flow when the secondary pressure is set and the primary pressure maintains the same.

Size 15~50mm: Primary pressure 0.6MPa
Secondary pressure 0.2MPa

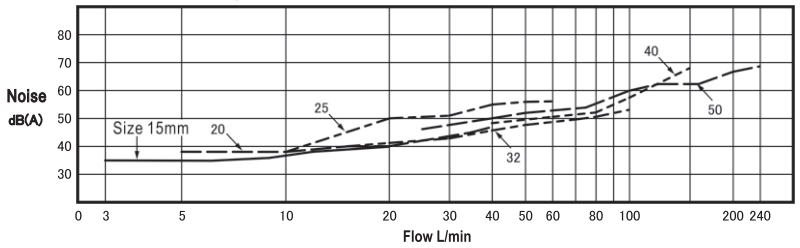

Size 65~100mm: Primary pressure 0.6MPa
Secondary pressure 0.2MPa

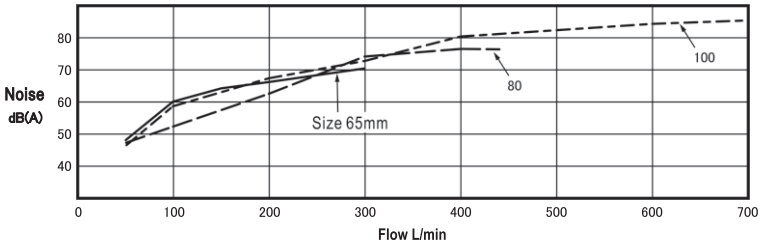

POINTS FOR INSTALLATION

- Install the bypass line.
- Use a globe valve for the stop valve on the bypass line.
- Install straight pipe before and after pressure reducing valve.
  The length of straight pipe depends on the state of pipe before and after valve. The length should be at least 10~20 times of nominal diameter (Minimum 500mm).
- Install pressure gauge at both the primary and secondary sides.
- Install safety relief valve at the secondary side.
  ① If not otherwise specified, the diameter of the safety relief valve should allow to blow out about 10% of the rated flow of pressure reducing valve.
  ② Set pressure table for safety relief valve is as follows.

SET PRESSURE FOR TABLE SAFETY RELIEF VALVE

(MPa)

Set pressure of pressure reducing valve	Set pressure of safety valve ※2.
0.1or less	+0.05 (+0.08)
over 0.1 and less than 0.4	+0.08 (+0.14)
0.4 or more and less than 0.6	+0.12 (+0.2)
0.6 or more and less than 0.8	+0.15 (+0.28)

Add the above value to set pressure of pressure reducing valve.

※1. The above value is added to the set pressure of pressure-reducing valve.
※2. The values in parentheses are applicable to soft-seated safety relief valve.

PIPING EXAMPLE

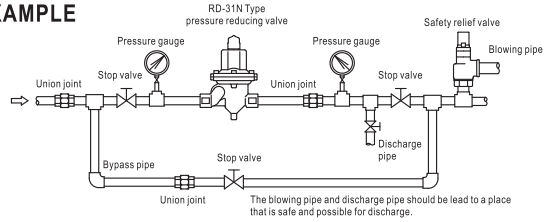

Note: In the case of RD-33FN~38F type series pressure reducing valves without embedded strainer, it is necessary to install strainer at the primary side.

DATA/RD-31N ~ 38F Type Pressure Reducing Valve (for Water, Hot Water, or Liquids)

■ FLOW CHARACTERISTICS (for Liquids)

● Size 15~50mm

Primary pressure (P_1) MPa

- - - - - - - - P_1=1.0~1.6MPa
(0.5MPa if the set pressure is 0.05MPa)
———— $P_1 = P_2$+0.2MPa
——·—— $P_1 = P_2$+0.1MPa
—— - - —— $P_1 = P_2$+0.05MPa
P_2: secondary set pressure (MPa)

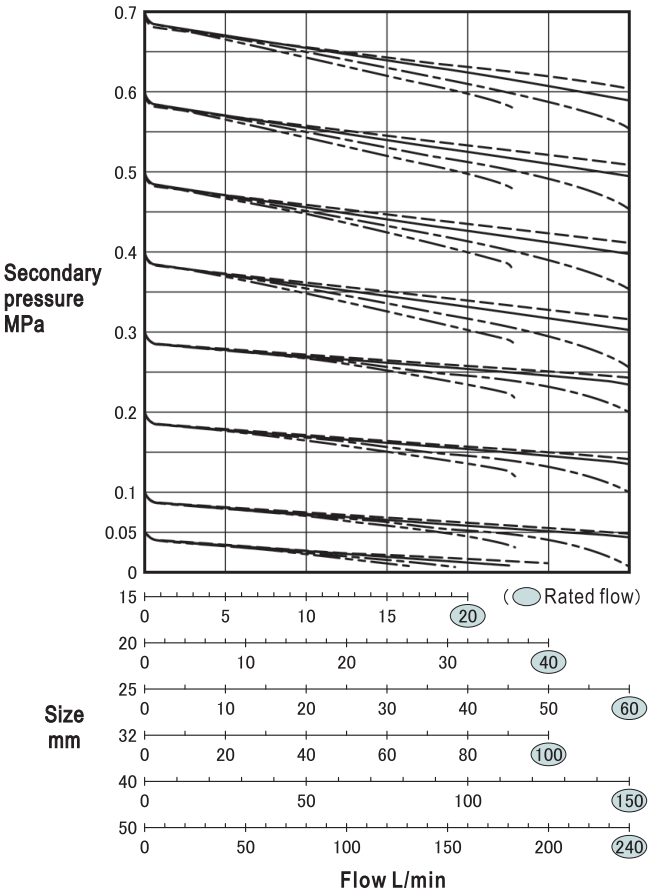

● Size 65~150mm

Primary pressure (P_1) MPa

- - - - - - - - P_1=1.0~1.6MPa
(0.5MPa if the set pressure is 0.05MPa)
———— $P_1 = P_2$+0.2MPa
——·—— $P_1 = P_2$+0.1MPa
—— - - —— $P_1 = P_2$+0.05MPa
P_2: secondary set pressure (MPa)

Note: In the case of nominal diameter 125mm, 150mm, the secondary set pressure is Max. 0.5MPa.

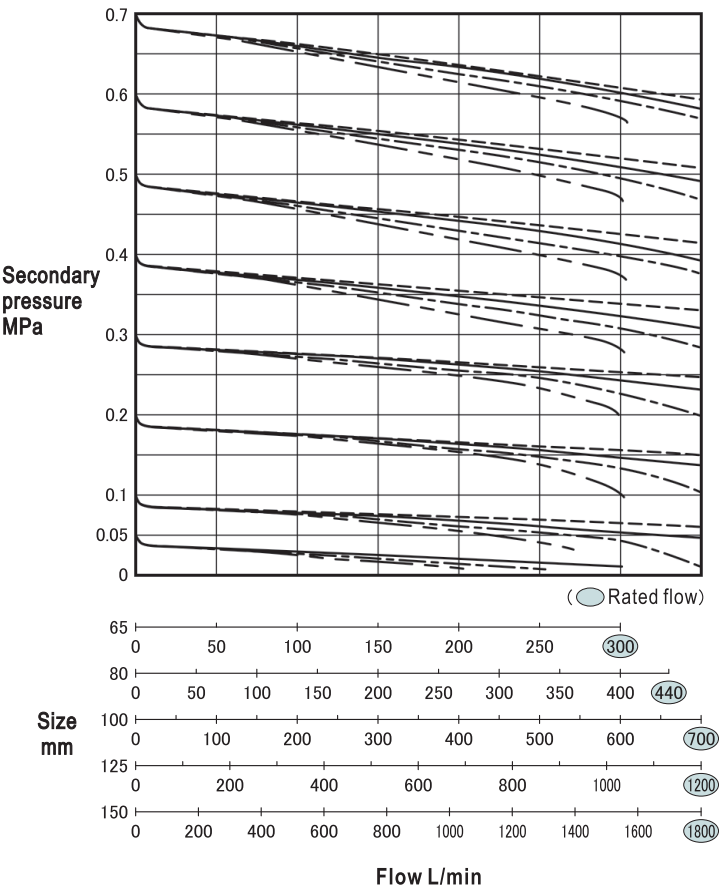

DATA/RD-31N ~ 38F Type Pressure Reducing Valve (for Air or Gases)

FLOW CHARACTERISTICS (for air and inert gases)

Applicable model: RD-31N, RD-31FN Size 15~50mm
RD-35, RD-35F
RD-37, RD-37F

Primary pressure

- ———— set pressure + 0.3MPa or larger
- —— - —— set pressure + 0.2MPa
- —— - - —— set pressure + 0.1MPa
- - - - - - - - set pressure + 0.05MPa

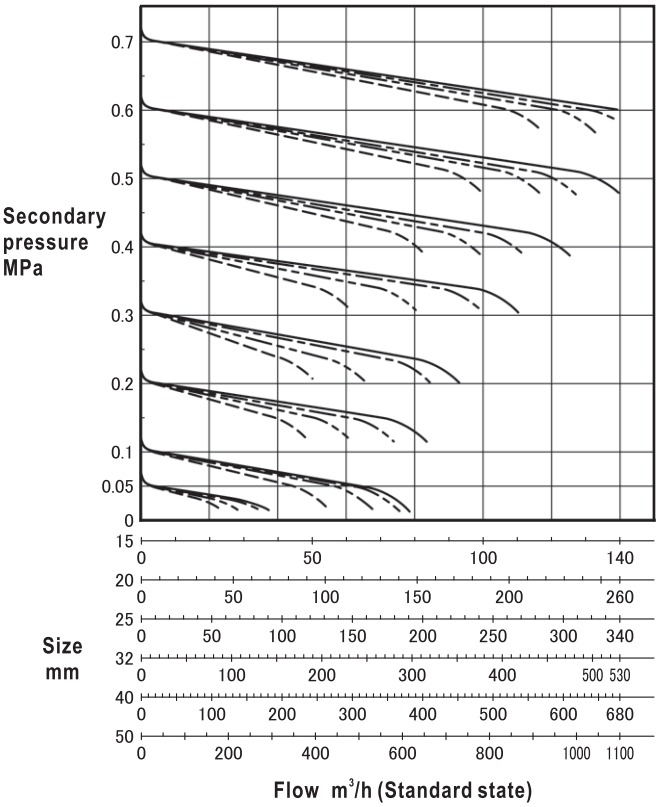

- The flow characteristics are based on air (standard state).
- For gases with specific gravity G, convert the flow into the flow of air.

Converted flow = flow of gas $\times \sqrt{G}$

$= \text{flow of gas} \times \sqrt{\frac{M}{28.96}}$

G: specific gravity (air=1)
M: molecular weight of gas .

(M: See Page 279 for molecular weight of gas)

Applicable model:RD-33FN, RD-35F Size 65~100mm

Primary pressure

- ———— set pressure + 0.3MPa or larger
- —— - —— set pressure + 0.2MPa
- —— - - —— set pressure + 0.1MPa
- - - - - - - - set pressure + 0.05MPa

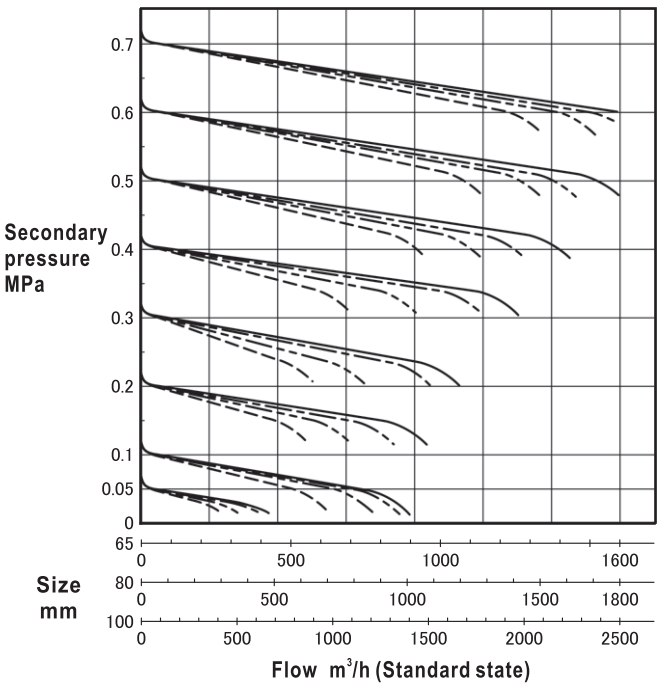

RD-44N Type Pressure Reducing Valve (for Water or Hot Water)

for Apartments, Hotels, Office Buildings, etc., Direct Operation, General-purpose Valve

(Low noise type)

RD-44N Type has the basic pressure reducing function of the combination pressure reducing valve series for separate house water supply. It can help improving construction and test efficiency.

Benefits of pressure reducing valve for separate house water supply:

1. Reduce noise of water flow.
2. By installing pressure reducing valve on each floor, it is able to eliminate the difference of water pressure between the floors.
3. Appropriate pressure reduces water splash and water hammer.
4. No influence to other rooms when water supply is cut off for maintenance purpose.
5. Stable mixing temperature and improved housing conditions.



FEATURES

- Chlorine water resistant rubber for permanent reliability.
- Hygiene structure allows no “dead water”.
- Reliable performance at low or high differential pressure conditions.
- Reliable installation, not necessary to dissemble pressure reducing valve.
- Allows water pressure test with valves installed.
- New “test gag” for easy testing.

SPECIFICATIONS

Model name	RD-44NLP	RD-44NMP	RD-44NHP
Code name	**RD44N-FLPL1**	**RD44N-FMPL2**	**RD44N-FHPL3**
Applicable fluid	Water & hot water		
Fluid temperature	5~90℃		
Applicable primary pressure	Max. 1.0MPa		
Adjustable secondary pressure	**0.05~0.12MPa (Set at 0.08MPa)**	**0.11~0.23MPa (Set at 0.20MPa)**	**0.20~0.30MPa (Set at 0.20, 0.25MPa)**
Maximum reducing rate	10:1		
Minimum pressure differential across the disc	0.02MPa		
Rated flow	50 L/min when pressure differential exceeds 0.1MPa		
End connection	Screwed JIS R¾″ union pipe		
Materials	Body(Cast bronze), Diaphragm & disc(Synthetic rubber)		
Valve body pressure test	Hydraulic 1.75MPa*1.		
Installation	In vertical and horizontal pipe line		
Accessory	Union pipe(pipe, nut, gasket), Foam polyethylene case for heat insulation, Test gag(For water pressure test) *1., Fitting for pressure gauge (It is already installed in the body for secondary side.)		
Strainer	60Mesh		

*1. Use test gag within 1.75MPa at water pressure test.
*2. Pressure gauge is optional item.

FLOW CHARACTERISTICS

Range code of adjustable secondary pressure: L,M

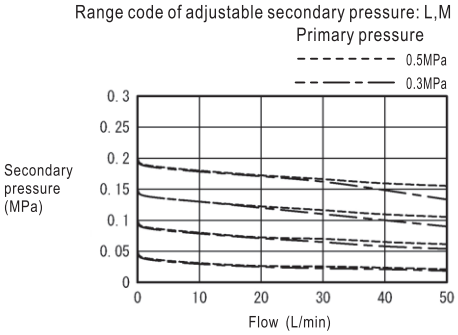

Range code of adjustable secondary pressure: H

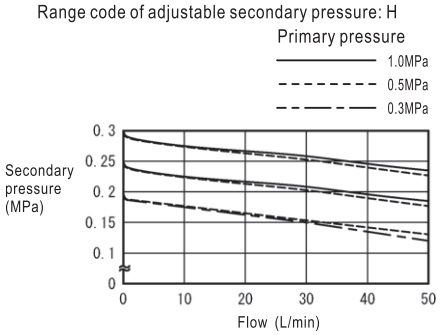

NOISE CHARACTERISTICS

- Noise characteristics when flow changes

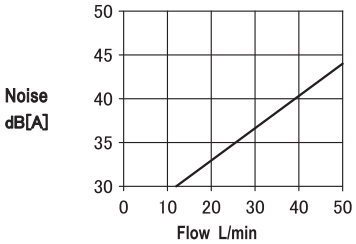

Primary pressure	0.6MPa
Secondary set pressure	0.2MPa
Background noise	30dB(A)
Microphone distance	15cm

- Noise characteristics when primary pressure changes

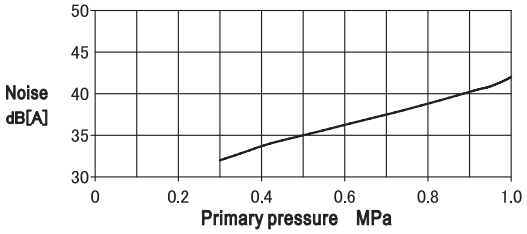

Secondary set pressure	0.2MPa
Flow	30 L/min
Microphone distance	15cm
Background noise	30dB(A)

CONSTRUCTION

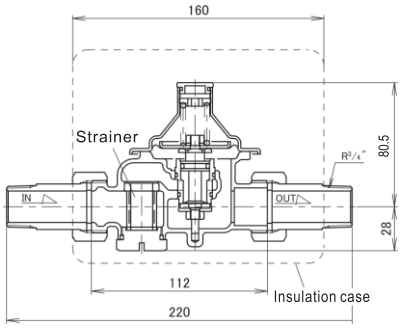

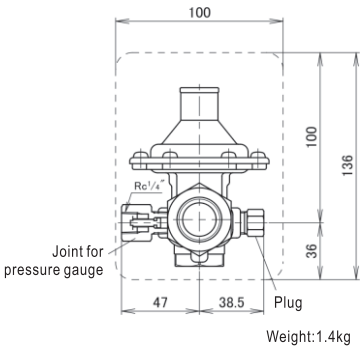

Weight:1.4kg

RD-43N Type Pressure Reducing Valve (for Water or Hot Water)

for One-Room Apartment, etc. (Low noise type)

RD-43N Type is a pressure reducing valve for separate house water supply. It is ideal for small or medium capacity water/hot water supply system in one-room apartment etc.
For water supply in common apartments or large capacity water supply, use RD-44N or 47N Type.



FEATURES

- Chlorine water resistant rubber for permanent reliability.
- Hygiene structure allows no “dead water”.
- Reliable performance at low or high differential pressure conditions.
- Reliable installation, not necessary to dissemble pressure reducing valve.
- Allows water pressure test with valves installed.
- New “test gag” for easy testing.

SPECIFICATIONS

Model name	RD-43NL	RD-43NM	RD-43NH
Code name	**RD43N-FLL1**	**RD43N-FML2**	**RD43N-FHL3**
Size	15・20(½″・¾″)		
Applicable fluid	Water & hot water		
Fluid temperature	5~90℃		
Applicable primary pressure	Max. 1.0MPa		
Adjustable secondary pressure	**0.05~0.12MPa (Set at 0.08MPa)**	**0.11~0.23MPa (Set at 0.20MPa)**	**0.20~0.30MPa (Set at 0.20, 0.25MPa)**
Maximum reducing rate	10:1		
Minimum pressure differential across the disc	0.02MPa		
Rated flow	Size 15mm:30 L/min, Size 20mm:35 L/min (Pressure differential 0.1MPa and more)		
End connection	Screwed JIS Rc½″ or Rc¾″		
Materials	Body(Cast bronze), Diaphragm & disc(Synthetic rubber)		
Valve body pressure test	Hydraulic 1.75MPa*1.		
Installation	In vertical and horizontal pipe line		
Accessory	Foam polyethylene case for heat insulation, Test gag(For water pressure test) *1., Fitting for pressure gauge (It is already installed in the body for secondary side.)		
Strainer	60Mesh		

*1. Use test gag within 1.75MPa at water pressure test.
*2. Pressure gauge is optional item.

CONSTRUCTION

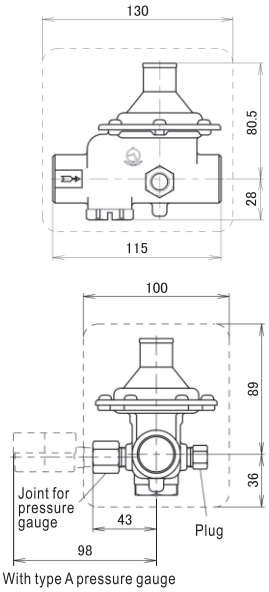

With type A pressure gauge

In the case of valve with type D pressure gauge

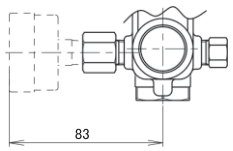

With type D pressure gauge

Mass
Size 15mm:0.9kg
Size 20mm:1.0kg

NOISE CHARACTERISTICS

● **Noise characteristics when flow changes**

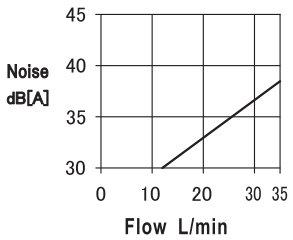

Primary pressure	0.6MPa
Secondary set pressure	0.2MPa
Background noise	30dB(A)
Microphone distance	15cm

● **Noise characteristics when primary pressure changes**

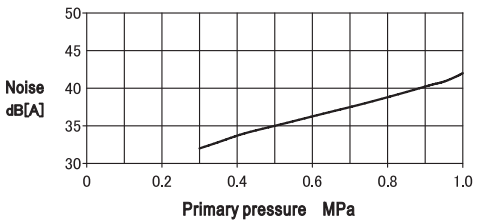

Secondary set pressure	0.2MPa
Flow	30 L/min
Microphone distance	15cm
Background noise	30dB(A)

PRESSURE CHARACTERISTICS

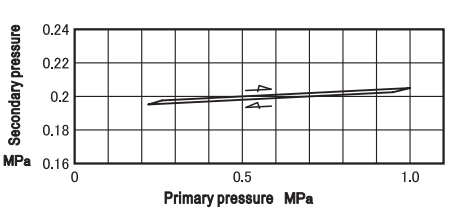

This figure shows the change of the secondary pressure when the primary pressure is 0.5MPa, secondary set pressure is 0.2MPa, and the primary pressure changes from 0.5~1MPa to 0.22~0.5MPa.

FLOW CHARACTERISTICS

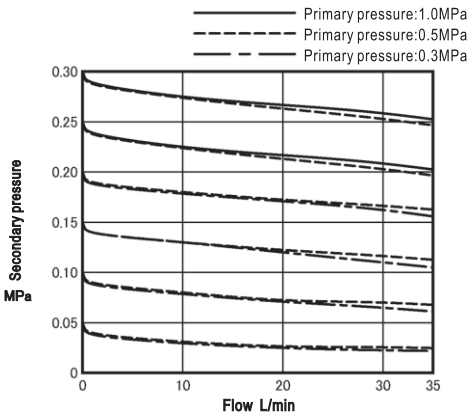

RD-47N Type Pressure Reducing Valve (for Water or Hot Water)

for Large Houses, etc.

RD-47N Type is suitable for water/hot water supply in apartments and tall buildings etc.

1. Reduce noise of water flow.
2. Eliminate the difference of water pressure between the floors.
3. Appropriate pressure allows no water splash.
4. No influence to other rooms when water supply is cut off for maintenance purpose.
5. Stable mixing temperature and improved housing conditions.



FEATURES

- Chlorine water resistant rubber for permanent reliability.
- Hygiene structure allows no “dead water”.
- Reliable performance at low or high differential pressure conditions.
- Reliable installation, not necessary to dissemble pressure reducing valve.
- Allows water pressure test with valves installed.
- New “test gag” for easy testing.
- Cassette method allows easy maintenance.

SPECIFICATIONS

Model name	RD-47NL	RD-47NH
Code name	**RD47N-FLPL1**	**RD47N-FHPL6**
Applicable fluid	Water & hot water	
Fluid temperature	5~90℃	
Applicable primary pressure	Max. 1.0MPa	
Adjustable secondary pressure	**0.05~0.13MPa(Set at 0.08MPa)**	**0.12~0.35MPa(Set at 0.20MPa)**
Maximum reducing rate	10:1	
Minimum pressure differential across the disc	0.02MPa	
Rated flow	80 L/min when pressure differential exceeds 0.1MPa	
End connection	Screwed JIS R1″ (Union pipe)	
Materials	Body(Cast bronze), Diaphragm & disc(Synthetic rubber)	
Valve body pressure test (Hydraulic)*1.	Primary: 1.75MPa, Secondary: 0.42MPa	
Installation	In vertical and horizontal pipe line	
Accessory	Union pipe(pipe, nut, gasket), Foam polyethylene case for heat insulation, Test gag(For water pressure test) *1., Fitting for pressure gauge (It is already installed in the body for secondary side.)	
Strainer	40Mesh	

*1. Use test gag within 1.75MPa at water pressure test.
*2. Pressure gauge is optional item.

FLOW CHARACTERISTICS

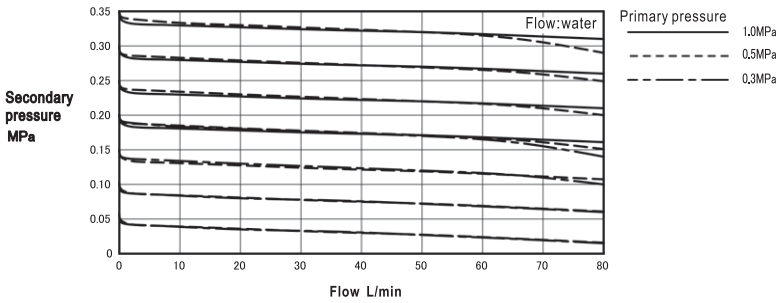

CONSTRUCTION

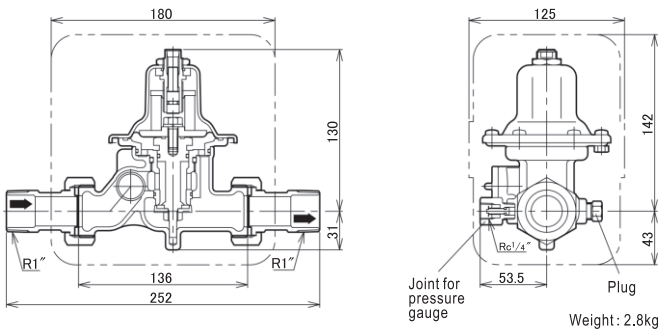

RD-14 Type Series Pressure Reducing Valve (for Water, Hot Water, Air or Oils)

Direct operated pressure reducing valve for water, liquids, or air with small or large flow and small range of pressure change.

Ideal for pressure control of roof water tank, water pumping system, or boiler direct linking water supply system for tall/medium height buildings or in industrial applications, for controlling pressure of fuel, lubricants and air.



RD-14W,14H Type



RD-14CN Type



Special order product
(With 2 pressure gauges)

FEATURES

- Pressure balanced structure with small change of set pressure.
- One-way (upper side) dissembling allows easy maintenance.
- RD-14CN Type has nylon coating, which can prevent occurrence of rusty water.

SPECIFICATIONS

Type	Standard	Hot water & oil	Nylon coating
Model name	RD-14W	RD-14H	RD-14CN
Code name	**RD14W-B ☐**	**RD14H-B ☐**	**RD14CN-B ☐**
	※ L, M or H for adjustable secondary pressure is required in ☐.		
Applicable fluid	Water, hot water & air	Oils not corrosive,kerosene,lubricant, heavy oil A & B, & hot water	Water & hot water
Fluid temperature	5~60℃	5~90℃	5~60℃
Fluid viscosity	—	Max. 800cSt	—
Applicable primary pressure	Max. 1.0MPa		
Adjustable secondary pressure	**Size 15~80mm L:0.05~0.35MPa, M(For RD-14CN Type is H):0.3~0.7MPa Size 100~150mm L:0.05~0.35MPa, M(For RD-14CN Type is H):0.3~0.5MPa**		
Maximum reducing rate	10:1		
Minimum pressure differential across the disc	0.05MPa		
Minimum adjustable flow	Water:2~5 L/min Air:5~10m³/h(Standard state)	2~5 L/min	
Leakage allowance	Nil (Confirm at pressure gauge)		
End connection	Flanged JIS 10KRF		
Materials	Body(Cast iron), Trim(Cast bronze), Diaphragm & disc(Synthetic rubber)		
Painting or coating for body	Interior:Epoxy resin	Interior:Rust proof oil	Nylon 11 coating
Valve body pressure test	Hydraulic 1.75MPa		

∗1. Valve with connecting thread (Screwed JIS Rc¼″) for pressure gauge on the side of body and with pressure gauges mounted are available upon request.
∗2. Valves with adjustable secondary pressure in 0.65~0.95MPa for size 80mm or smaller and 0.45~0.8MPa for size 100mm or bigger are available upon your request.
∗3. The size for installation on vertical pipeline is up to 80mm. And there should be a relatively large space for maintenance.
(Valves above 100mm in size should be installed perpendicularly to horizontal pipe.)

DIMENSIONS

(mm)

Size	A	L	G	H	Cv value	Mass(kg)
15(½″)	156	142	65	256	1	10
20(¾″)	160	142	65	256	2	10
25(1″)	160	142	65	257	3.5	10.5
32(1¼″)	180	174	76	332	5.5	17
40(1½″)	180	174	76	333	8	17.5
50(2″)	190	174	81	341	14	19
65(2½″)	230	218	95	434	22	37
80(3″)	250	218	100	439	32	40
100(4″)	300	250	125	490	48	67
125(5″)	370	340	150	640	75	112
150(6″)	400	340	165	655	108	150

Flange code JIS 10KRF

CONSTRUCTION

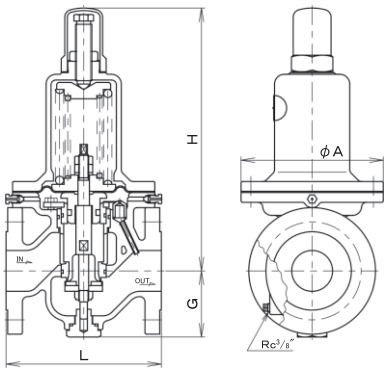

Size:15~80mm

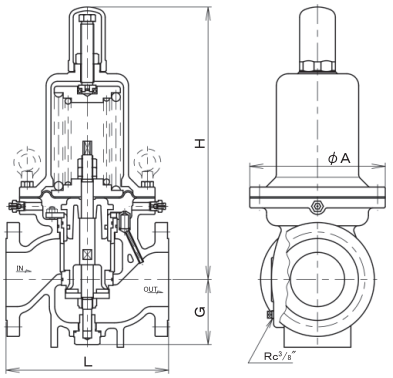

Size:100~150mm

Depending on nominal diameter, the structure of the valve may be different from what is shown in the drawing.

DATA/RD-14 Type Series Pressure Reducing Valve (for Water, Hot Water, Air or Oils)

FLOW CHARACTERISTICS

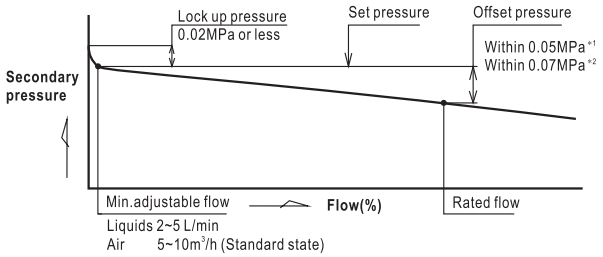

*1.At spring range 0.05~0.35MPa
*2.At spring range 0.3~0.5MPa or 0.3~0.7MPa

PRESSURE CHARACTERISTICS

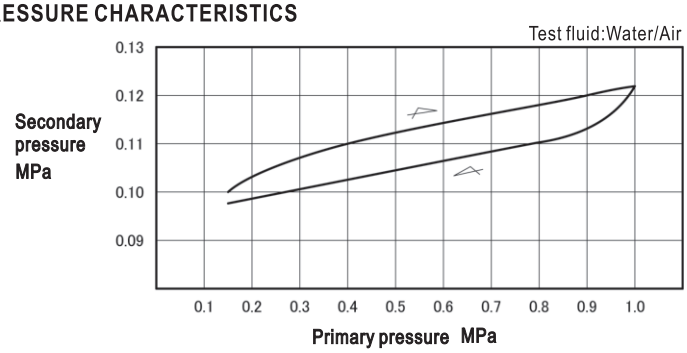

The above chart shows the change of secondary pressure when primary pressure was changed to 0.15MPa, 1.0MPa and 0.15MPa at primary pressure being 0.15MPa and secondary pressure being set at 0.1MPa.

TERMS

- **Primary pressure:** The inlet pressure of pressure reducing valve or the inlet pressure of piping that is near to pressure reducing valve.
- **Secondary pressure:** The outlet pressure of pressure reducing valve or the outlet pressure of piping that is near to pressure reducing valve.
- **Set pressure:** Secondary pressure at minimum adjustable flow.
- **Offset pressure:** The difference between secondary pressure and setup pressure when primary pressure is kept at a constant level but flow increases gradually from minimal adjustable flow to the rated flow of pressure reducing valve.
- **Lockup pressure:** The increased pressure above setup pressure when the secondary valve of pressure reducing valve is locked up.
- **Minimum adjustable flow:** The minimum flow of pressure reducing valve for maintaining stable flow.
- **Rated flow:** The maximum flow at the specified offset pressure when primary pressure is kept at a constant level.

PIPING EXAMPLE

PIPING ILLUSTRATION (for Liquids)

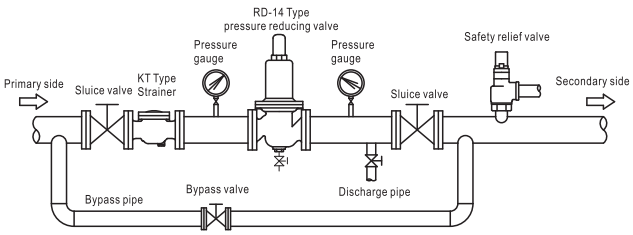

PIPING ILLUSTRATION (for Air)

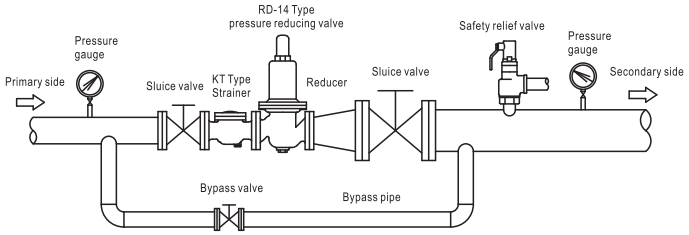

POINTS FOR INSTALLATION

❶ There should be some space for dissembling and maintenance. Leave some space, whose height should be h (see the following table) above the center of piping.

TABLE FOR SPACE (mm)

Size (mm)	15	20	25	32	40	50	65	80	100	125	150
h	500	500	500	600	600	600	700	700	800	1000	1000

❷ In the case of liquid application, install straight pipe before and after pressure reducing valve.
The length of straight pipe depends on the piping condition before and after the valve. Basically, it should be 10~20 times of the nominal diameter (min. 500mm).

❸ Install strainer at the primary side of pressure reducing valve.

❹ Considering the pressure rise at failure, safety relief valve is installed at the secondary side of pressure reducing valve. Generally, the capacity of the safety relief valve should be about 10% of the maximum flow of pressure reducing valve. See the following table for the approximate set pressure of safety relief valve.

SET PRESSURE FOR SAFETY RELIEF VALVE (MPa)

Set pressure of pressure reducing valve	Set pressure of safety valve ※2.
0.1or less	+0.05 (+0.08)
Over 0.1 and less than 0.4	+0.08 (+0.14)
0.4 or more and less than 0.6	+0.12 (+0.2)
0.6 or more and less than 0.8	+0.15 (+0.28)
0.8 or more and less than 1.0	+0.19
1.0 or more and 1.2 or less	+0.23

Add above value to set pressure of pressure reducing valve.
※1. The above value is added to the set pressure of pressure-reducing valve.
※2. The values in parentheses are applicable to soft-seated safety relief valve.

❺ In the case of gas application, since the volume may expand after pressure reducing valve, use reducer to enlarge the piping of the secondary side.

❻ In the case of liquid application, install sluice valve at the secondary side (see Piping illustration for liquids) to allow easy maintenance. Particularly in the case of installation in shaft in tall/medium height buildings, a discharge pipe is necessary if wires, electric devices are installed in the same shaft. The discharge pipe can be installed directly on the body of pressure reducing valve.

❼ Before installing pressure reducing valve, clean in the piping and remove contaminations such as welding residuals. Most claims related to pressure reducing valve in new piping are caused by contaminations in piping.

❽ For RD-14CN and 14PN Types, thermo-insulation is necessary if the difference of temperature between the valve and ambient air is larger than 40℃.

Note: Also see Points for Installation of Pressure Reducing Valve. (Page 59~60)

NOMINAL DIAMETER SELECTION CHART (for Liquids)

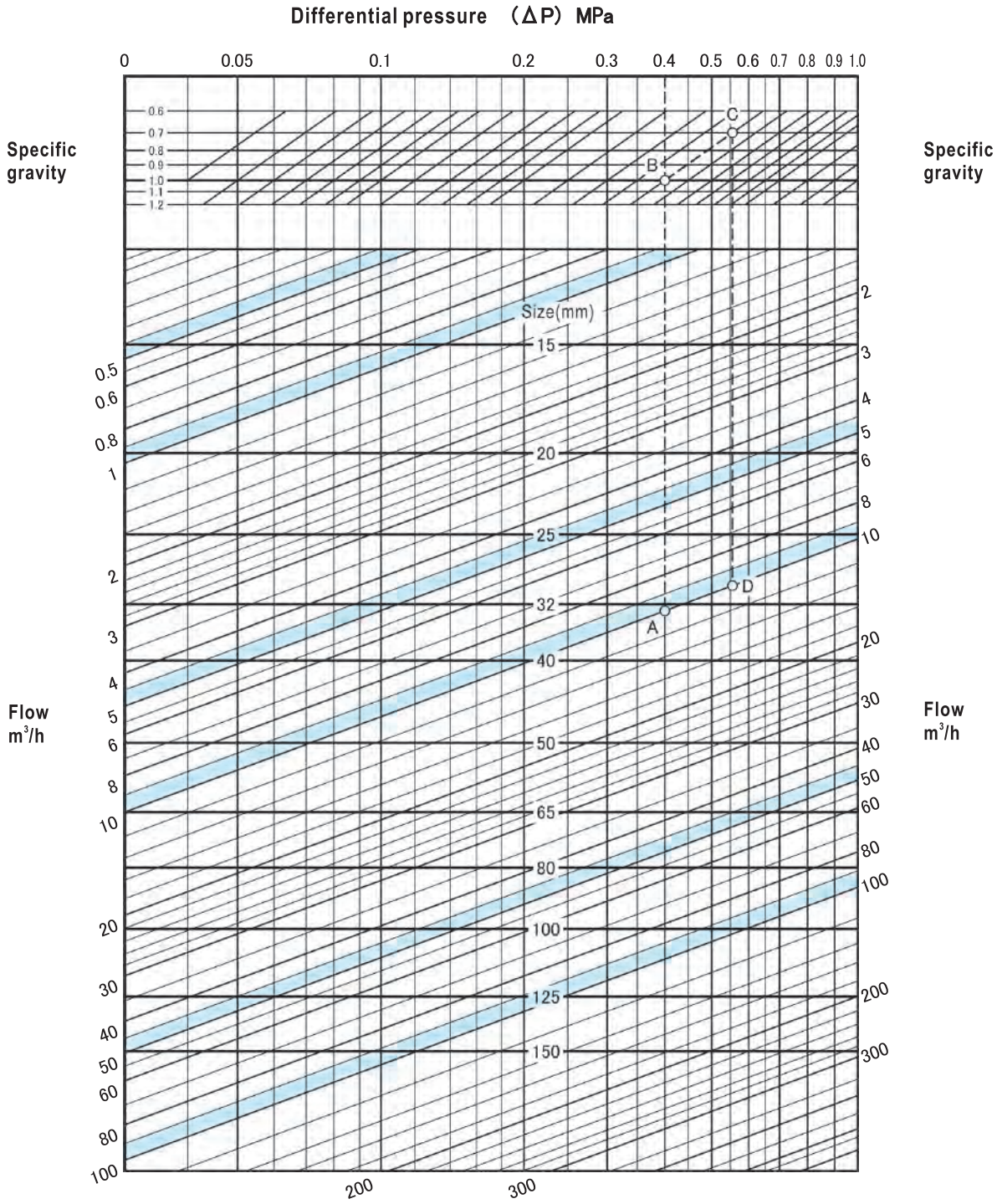

● HOW TO USE THE CHART

Example: Find out the nominal diameter meeting the following conditions:
Primary pressure: 0.5MPa
Secondary pressure: 0.1MPa
Specific gravity: 1 (water)
Flow: 10m³/h
Differential pressure(ΔP): 0.5−0.1=0.4MPa

Find out the intersection point A between the 0.4MPa differential pressure (ΔP) line and the 10m³/h flow line. Since point A is between the lines representing nominal diameter size 32mm and 40mm, the nominal diameter should be the larger one, i.e. size 40mm.

In the case that other conditions remain the same but the specific gravity is 0.7, find out the intersection point B between the 0.4MPa differential pressure (ΔP) line and the 1.0 specific gravity line. Move from point B on the 0.7 specific gravity line parallelly to reach point C. Now draw a vertical line from point C until it intersects with the 10m³/h flow line. The intersection point is named D. Since point D is located between the lines representing nominal diameter size 25mm and 32mm, the nominal diameter should be the larger one, i.e. size 32mm.

NOMINAL DIAMETER SELECTION CHART (for Air)

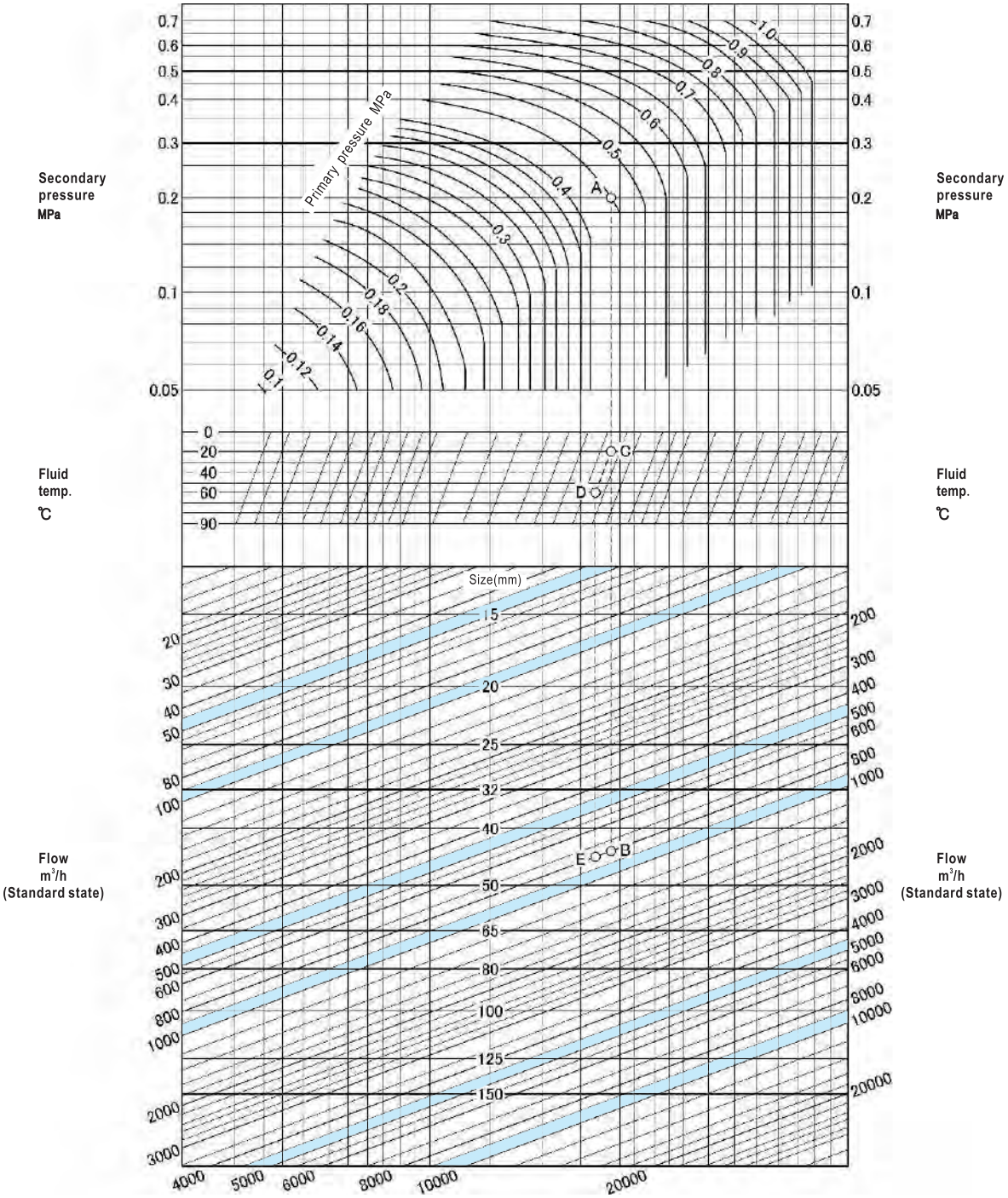

● HOW TO USE THE CHART

Determine the nominal diameter under the following conditions:
Primary pressure: 0.45MPa
Secondary pressure: 0.2MPa
Temperature: 20℃
Flow (standard state): 800m³/h
Obtain the crossing point A of the curves representing 0.45MPa primary pressure and 0.2MPa secondary pressure.

Draw a vertical line from point A until it intersects with the 800m³/h flow line. The crossing point is named B. Since point B is located between lines representing size 40mm and 50mm, the larger one, which is 50mm, is selected.
Here is another example showing how to determine the nominal diameter when other conditions remain the same but the temperature is 60℃. Draw a vertical line from point A until the line intersects with the 20℃ temperature line. The crossing point is named C. Move the line parallelly until it intersects with the 60℃ temperature line. The crossing point is named D. Draw a vertical line from point D until it intersects with the 800m³/h flow line. The crossing point is named E. Since point E is located between lines representing size 40mm and 50mm, the larger one, which is 50mm, is selected.

WVR-02 Type Series Pressure Reducing Valve (for Water)

for Builiing facilities Industrial facilities, etc., Multipurpose Pilot Type(High capacity)

Large capacity pressure reducing valve for water supply line of air conditioning, sanitary accommodations, fire extinguishing and farm irrigating equipments. Pilot-operated valve has pressure balancing structure, thus can regulate secondary pressure without being influenced by the change of primary pressure.



FEATURES

- Sensitive needle valve opening adjustment according to state of use, allow easy and reliable operation.
- The base and pilot-operated part can be dissembled easily, thus make it easy to adjust, repair or replace parts.
- Lift limiting device limits overflow.

SPECIFICATIONS

Type		Standard		Nylon coating	
Model name		WVR-02		WVR-02CN	
Code name		**WVR02-B ☐**	**WVR02-L ☐**	**WVR02CN-B ☐**	**WVR02CN-L ☐**
		※ L (low press.) or H (high press.) for adjustable secondary pressure is required in ☐.			
Size		50~400(2″~16″)	40~200(1½″~8″)	80~200(3″~8″)	
Applicable fluid		Water & hot water			
Fluid temperature		5~60℃			
Applicable primary pressure		Max. 1.0MPa*1.			
Adjustable secondary pressure		**Size 40~200mm L:0.05~0.35, H:0.3~0.95MPa Size 250~400mm L:0.05~0.35, H:0.3~0.7MPa**			
Maximum reducing rate		10:1			
Minimum pressure differential across the disc		0.05MPa			
Offset pressure		Adjustable secondary pressure 0.05~0.35MPa:Within 0.08MPa*1. Adjustable secondary pressure 0.3~0.95(0.7)MPa:Within 0.1MPa*1.			
End connection		Flanged JIS 10KRF*1.			
Materials	**Body**	**Cast iron**	**Ductile cast iron**	**Cast iron**	**Ductile cast iron**
	Trim	Diaphragm & disc(Synthetic rubber), Seat ring(Cast bronze)			
Painting or coating for Body		Interior:Epoxy resin		Nylon 11 coating	
Valve body pressure test		Hydraulic 1.75MPa			
Installation		In vertical and horizontal pipe line However, 250mm and bigger are allowed to install in horizontal pipe line erect position			

∗1. Size 200mm and smaller with Flanged JIS 16K are available upon your request.
(Offset pressure with Flanged JIS 16KRF, Adjustable secondary pressure for 0.05~0.35MPa is below 0.09MPa, for 0.3~1.0MPa is below 0.14MPa)
∗2. The valve with 2 pressure gauges is also available upon your request.
∗3. Refer to Page 51 of value size selection chart for WV Types.

CONSTRUCTION

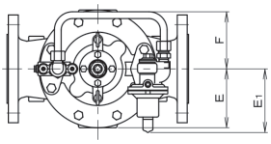

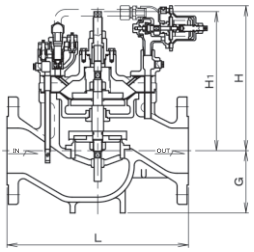

Size 40~200mm

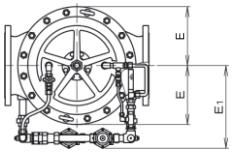

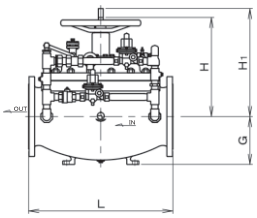

Size 250~400mm

DIMENSIONS (Body materials: Cast iron)

(mm)

Size	L		G	H	H_1	E	E_1	F	Cv value	Mass(kg)
	JIS 10K	JIS 16K								
40(1½″)	260	260	80	285	230	93	136	115	18	21.5
50(2″)	270	270	85	285	230	93	136	115	32	24.5
65(2½″)	340	340	100	298	261	117	136	145	38	43
80(3″)	350	354	110	298	261	117	136	145	54	43
100(4″)	400	404	130	324	300	130	136	145	96	60
125(5″)	440	444	140	354	371	145	136	145	150	70
150(6″)	500	504	165	387	416	173	136	145	216	125
200(8″)	600	608	200	438	522	218	136	145	384	200
250(10″)	720	—	240	490	560	295	420	—	600	470
300(12″)	820	—	280	540	620	328	430	—	864	524
400(16″)	1040	—	370	690	800	440	520	—	1536	1400

∗1. JIS10K:Flanged code JIS 10KRF
JIS16K:Flanged code JIS 16KRF
∗2. Please contact our local agent about figures for valve body with Ductile cast iron.
∗3. Size 40mm of material is Ductile cast iron.

SIZE SELECTION CHART (for Water)

■ VELOCITY RATE LINE CHART

■ SIZE SELECTION CHART

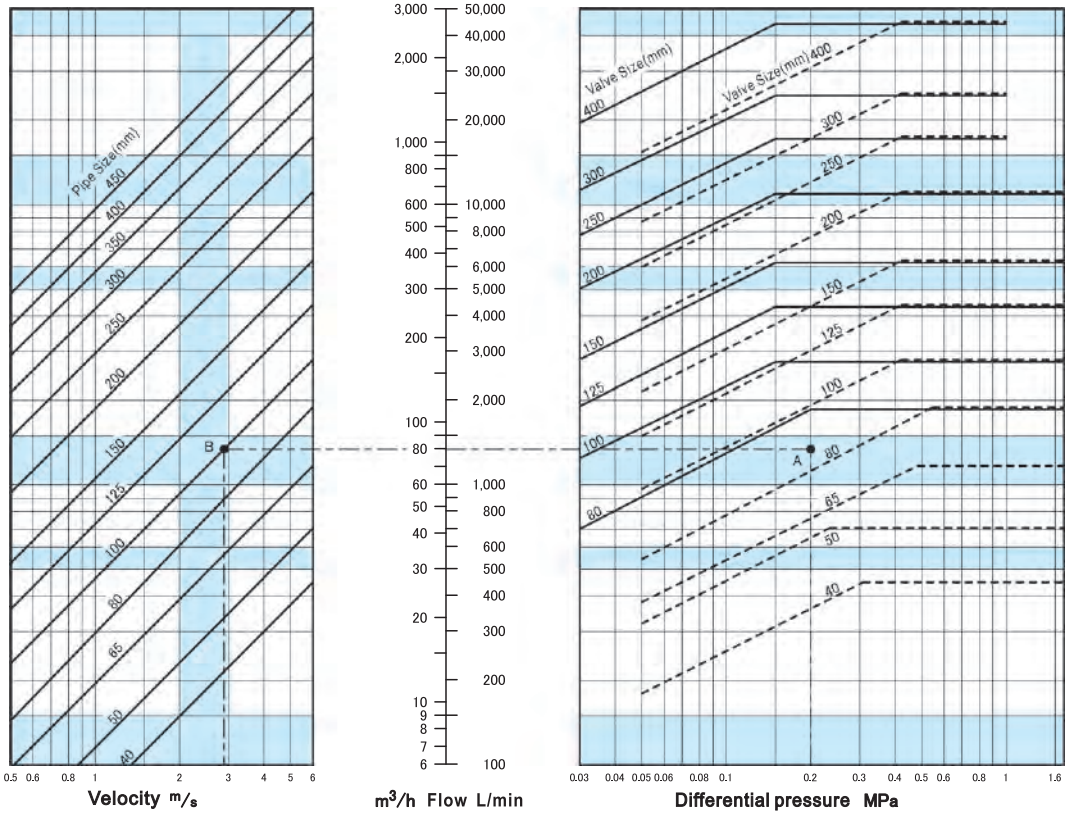

● **PRODUCTS WHOSE SIZES CAN BE DETERMINED**

- - - - - - - (dashed line) in the size selection chart

Pressure reducing valve WVR-02 Type, primary pressure regulating valve WVM-02 Type.

● **VALVES APPLICABLE TO**

——— (solid line) in size selection chart

Solenoid valve WVE-02 Type, level control valve WVL-02 Type

Note 1: In the size selection chart, the horizontal position of the valve size line represents the maximum flow.

Note 2: Use velocity line of less than 3m/s in velocity line chart with obtained pipe size, if not for any special case.

Note 3: Size 40~65mm is for WVR and WVM Types only.

Note 4: For sizes 40,50mm, in case of the larger differential pressure,please contact our local agent in your area.

● HOW TO USE THE CHART

Example: Select the size of valve for the following conditions:

Primary pressure: 0.5MPa; Secondary pressure: 0.3MPa; Flow: 80m³/h

1.Calculate differential pressure between inlet and outlet of valve: 0.5−0.3=0.2MPa

2.Follow the 80m³/h flow line horizontally until it intersects with the 0.2MPa differential pressure line. The intersection point is named A.

3.Since point A is between the lines representing size 80mm and 100mm, select the larger size, which is size 100mm.

● CONFIRMING PIPE FLOW RATE

1. Assume the pipe and valve are of the same diameter. Follow the 80m³/h flow line horizontally until it intersects with the 100mm size line to obtain cross point B.
2. Draw a vertical line from point B and find out the pipe flow rate 2.8m/s.
3. Since the flow rate is less than 3m/s, the pipe size should be size 100mm. If flow rate is larger than 3m/s, select a larger size to make the flow rate less than 3m/s.

● REFERENCE

■To select the size for pressure reducing valve or primary pressure regulating valve with considering dynamic water pressure:

For pressure reducing valve, add the largest offset pressure to the secondary pressure. For primary pressure regulating valve, deduct the minimum accumulation from the primary pressure. The size can be determined using the differential pressure between primary side and secondary side of the valve.

●Pressure reducing valve

Find out the maximum offset pressure 0.1MPa from the specifications. The differential pressure is 0.5−(0.3+0.1)=0.1MPa. Use the method described in the example in “HOW TO USE THE CHART” to select the size.

●Primary pressure regulating valve

Find out the minimum accumulation 0.03MPa from specifications. The differential pressure is (0.5−0.03)−0.3=0.17MPa. Use the method described in the example in “HOW TO USE THE CHART” to select the size.

DATA/WV Type Regulating Valve (for Water or Hot water)

PIPING EXAMPLE (horizontal piping with the size of WVR-02 Type pressure reducing valve is 200mm or smaller)

Water supply system using roof tank in tall/medium height buildings

Install water hammer preventing device closely at the primary side of pressure reducing valve if the pressure is reduced by one and more steps.

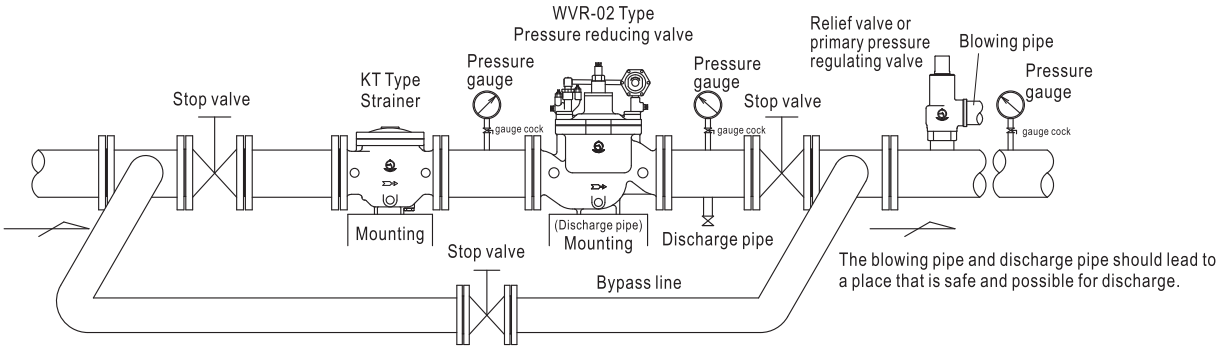

POINTS FOR INSTALLATION AND USE

BYPASS LINE

It is necessary to install a bypass pipe with stop valve, as shown in the figure above, for test before filling water, air purging, cleaning the inside of pipes, or maintenance.

STRAIGHT PIPE

To ensure stable operation of the valve, install straight pipe before and after the valve. The length of the straight pipe depends on the state before and after piping. However, the length should be approximately 10~20 times the nominal diameter (Minimum 500mm).

PIPING SUPPORT

Install piping support to avoid undesired mechanical impact due to the weight of the piping, weight of fluid, or continuous vibration, stress, or bending force.

STRAINER

Install strainer at the primary side of the valve.

SAFETY DEVICE

Considering the rise of secondary pressure, in some cases, it is necessary to install relief valve or primary pressure regulating valve at the secondary side.

See the following table for the approximate set pressure for the relief valve or primary pressure regulating valve. The outlet of the relief valve or primary pressure regulating valve should lead to a drainage that can accept the discharge of the valve.

TABLE OF SET PRESSURE FOR SAFETY RELIEF VALVE AND PRIMARY PRESSURE REGULATING VALVE (MPa)

Set pressure of pressure reducing valve	Set pressure of safety valve ※2.
0.1or less	+0.05 (+0.08)
over 0.1 and less than 0.4	+0.08 (+0.14)
0.4 or more and less than 0.6	+0.12 (+0.2)
0.6 or more and less than 0.8	+0.15 (+0.28)
0.8 or more and 1.0 or less	+0.19

Add above value to set pressure of pressure reducing valve.

※1. The above value is added to the set pressure of pressure-reducing valve.
※2. The values in parentheses are applicable to soft-seated safety relief valve.

THERMO-INSULATION

Cover the valve with insulating material if there is possibility of condensation or freezing. However, no thermo-insulation is to be applied on the coil of pilot-operated solenoid valve.

Note 1: The figure shows an example of WVR-02 Type. The piping for other types of valves are the same. However, for WVM-02 Type, there should be a rising part at the outlet piping. (See the piping example in Page 111)

Note 2: In the case of vertical piping, the piping should be the same as shown in the piping illustration. In addition, the weight of the piping should not be applied on valves, and there should be some space for maintenance purpose.

PRESSURE GAUGE

Install pressure gauge at the primary and secondary sides of the valve, and at locations that can be easily accessed after piping.

LIMITATION ON INSTALLATION LOCATION

In the case solenoid valve, the valve should not be installed at locations where corrosive or explosive gas may accumulate.

DISCHARGE PIPE

To allow easy maintenance, install discharge pipe before the stop valve at the secondary side. In the case of installation inside buildings, discharge pipe is particularly necessary for locations where there are also wires or electric devices installed. The discharge pipe should be led to a drainage that can accommodate the content of stop valves before and after the drainage.

MAINTENANCE SPACE

Leave some space surrounding the valve for maintenance (see the figures below).

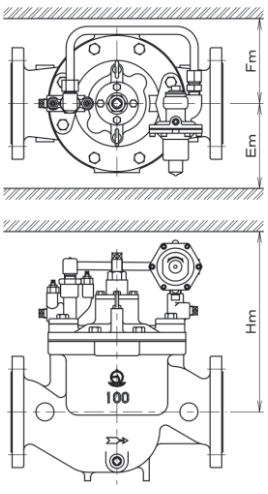

The figure shows an example for WVR-02 Type.
The maintenance space for other types of valves is the same.

TABLE FOR MAINTENANCE SPACE (mm)

Size	Hm	Em	Fm
40(1½″)	550	600	600
50(2″)	550	600	600
65(2½″)	600	600	600
80(3″)	600	600	600
100(4″)	800	680	680
125(5″)	1000	780	780
150(6″)	1200	910	910
200(8″)	1400	1060	1060
250(10″)	1500	1200	1200
300(12″)	1600	1300	1300
400(16″)	1800	1400	1400

RD-16 Type Pressure Reducing Valve (for Water or Liquids)

Pressure reducing valve with diaphragm at pressure sensing part. Ideal for high-pressure liquids and for installation at places where there is large differential pressure before and after the valve.
With a pressure balancing structure, the valve ensures only tiny change of secondary pressure when primary pressure changes.



SPECIFICATIONS

Model name	RD-16	
Code name	RD16-CL	RD16-CH
Applicable fluid	Water & liquids	
Fluid temperature	5~80℃	
Fluid viscosity	Max. 700cSt	
Applicable primary pressure	Max. 2.7MPa	
Adjustable secondary pressure	0.05~0.35MPa	0.3~0.7MPa
	Refer to the applicable pressure selection chart below.	
Minimum pressure differential across the disc	0.05MPa	
Lock up pressure	Max. 0.035MPa	
Offset pressure	Within 0.07MPa	Within 0.1MPa
Leakage allowance	Nil (Confirm at pressure gauge)	
End connection	Flanged JIS 10,16,20,30KRF	
Materials	Body(Cast steel), Seat(Stainless steel) Diaphragm & disc(Synthetic rubber), Spring case(Cast iron)	
Valve body pressure test	1.5 times of flange rated pressure. (Hydraulic)	

DIMENSIONS

(mm)

Size	L	L_1	G	H	A	Cv value	Mass(kg)
20(¾″)	186	88	110	365	174	2	23
25(1″)	190	90	110	365	174	3.5	24
32(1¼″)	220	110	115	445	218	5.5	36
40(1½″)	220	110	115	445	218	8	37
50(2″)	250	115	165	485	218	14	47

Flange code JIS 30KRF

SIZE SELECTION CHART

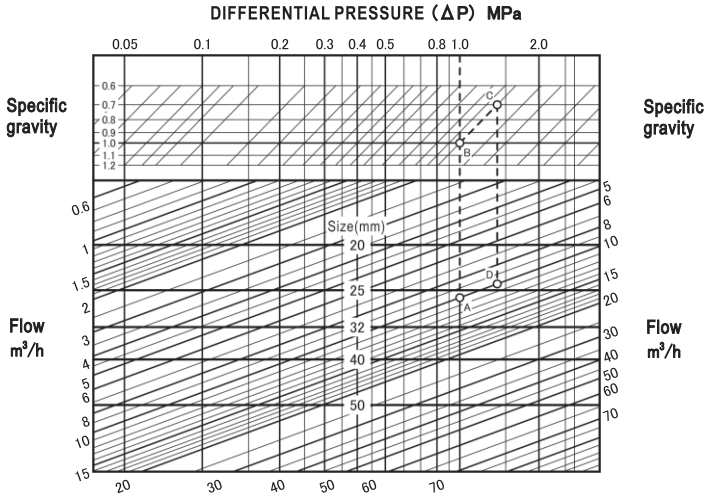

CONSTRUCTION

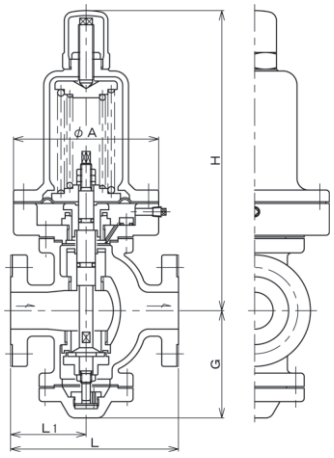

Depending on nominal diameter, the structure of the valve may be different from what is shown in the drawing.

HOW TO USE THE CHART

Example: Find out the nominal diameter meeting the following conditions:
Primary pressure: 1.5MPa
Secondary pressure: 0.5MPa
Specific gravity: 1 (water)
Flow: 10m³/h.
Differential pressure(ΔP): 1.5−0.5=1.0MPa
Find out the intersection point A between the 1.0MPa differential pressure (ΔP) line and the 10m³/h flow line. Since point A is between the lines representing nominal diameter size 25mm and 32mm, the nominal diameter should be the larger one, i.e. 32mm.
In the case that other conditions remain the same but the specific gravity is 0.7, find out the intersection point B between the 1.0MPa differential pressure (ΔP) line and the 1.0 specific gravity line. Move from point B on the 0.7 specific gravity line parallelly to reach point C. Now draw a vertical line from point C until it intersects with the 10m³/h flow line. The intersection point is named D. Since point D is located between the lines representing nominal diameter size 20mm and 25mm, the nominal diameter should be the larger one, i.e. 25mm.

APPLICABLE PRESSURE SELECTION CHART

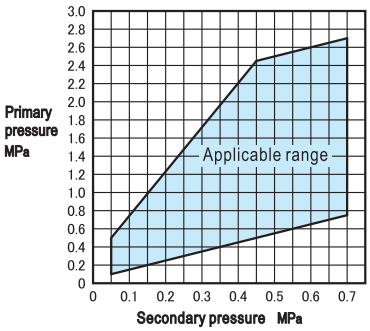

In the case pressure is not within the applicable range of pressure, perform 2-stage pressure reduction or use other type of valve.

RD-17, 17A Type Pressure Reducing Valve (for Water or Liquids)

Pressure reducing valve with piston-structured pressure sensing part. Ideal for high-pressure liquids and for installation at places where there is large differential pressure before and after the valve.
With a pressure balancing structure, the valve ensures only tiny change of secondary pressure when primary pressure changes.



SPECIFICATIONS

Model name	RD-17	RD-17A
Code name	**RD17-C ☐**	**RD17A-C ☐**
	※ L (low press.) or H (high press.) for adjustable secondary pressure is required in ☐.	
Applicable fluid	Water & liquids	
Fluid temperature	5~80℃ (Size 50mm and smaller with applicable temperature 5~100℃ are available upon your request.)	
Fluid viscosity	Max. 700cSt	
Applicable primary pressure	Max. 3.0MPa	Max. 2.7MPa
Adjustable secondary pressure	**L:0.7~1.05MPa, H:1.0~1.4MPa**	**L:0.2~0.35MPa, H:0.3~0.7MPa**
	Refer to the applicable pressure selection chart below.	
Minimum pressure differential across the disc	0.05MPa	
Lock up pressure	Max. 0.05MPa	
Offset pressure	Spring range 0.7~1.05MPa : Within 0.15MPa Spring range 1.0~1.4MPa : Within 0.2MPa	Spring range 0.2~0.35MPa : Within 0.15MPa Spring range 0.3~0.7MPa : Within 0.2MPa
Leakage allowance	Nil (Confirm at pressure gauge)	
End connection	Flanged JIS 10,16,20,30KRF	
Materials	Body(Cast steel), Seat(Stainless steel) Diaphragm & disc(Synthetic rubber), Spring case(Carbon steel or Carbon steel pipe)	
Valve body pressure test	1.5 times of flange rated pressure (Hydraulic)	

DIMENSIONS

(mm)

Size	L	L_1	G	H	Cv value		Mass(kg)
					RD-17 Type	RD-17A Type	
20(¾″)	186	88	110	363	2	1	15
25(1″)	190	90	110	363	3	1.5	16
32(1¼″)	220	110	115	390	5	2.5	22
40(1½″)	220	110	115	390	6	3	23
50(2″)	250	115	165	445	10	5	30
65(2½″)	290	140	160	500	15	7.5	55
80(3″)	325	145	210	593	18	9	85
100(4″)	355	160	225	705	32	16	133
125(5″)	445	200	291	880	50	25	218
150(6″)	485	220	290	959	72	36	338

Flange code JIS 30KRF

CONSTRUCTION

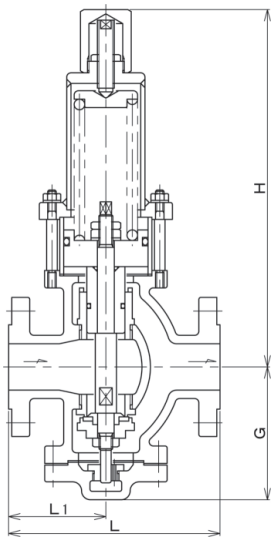

Depending on nominal diameter, the structure of the valve may be different from what is shown in the drawing.

APPLICABLE PRESSURE SELECTION CHART

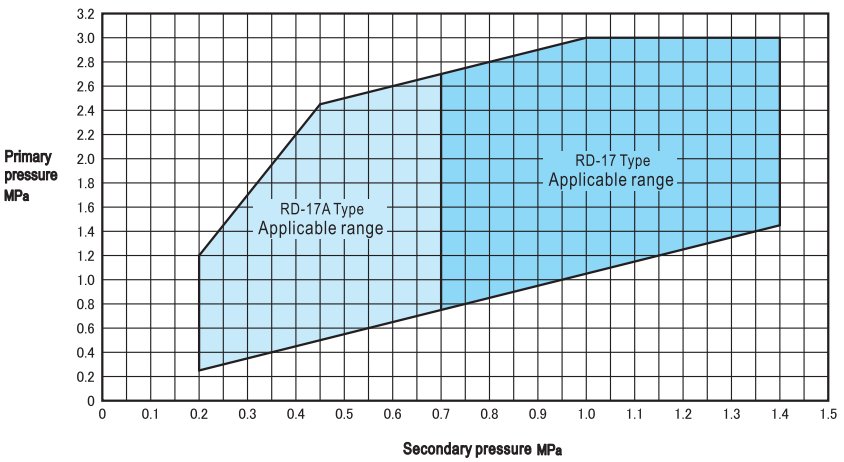

In the case pressure is not within the applicable range of pressure, perform 2-stage pressure reduction or use other type of valve.

DATA/RD-17,17A Type Pressure Reducing Valve (for Water or Liquids)

RD-17 TYPE DIAMETER SELECTION CHART (for water and liquids)

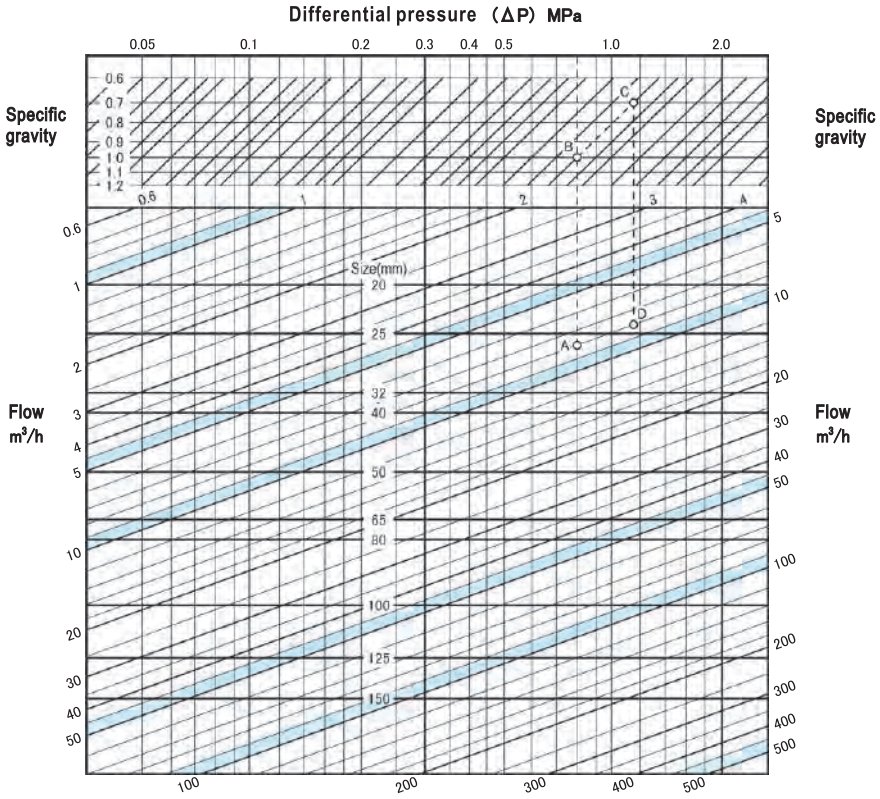

● HOW TO USE THE CHART

Example: Find out the nominal diameter meeting the following conditions:
Primary pressure: 1.6MPa
Secondary pressure: 0.8MPa
Specific gravity: 1 (water)
Flow: 8m³/h

Differential pressure(ΔP): 1.6−0.8=0.8MPa
Find out the intersection point A between the 0.8MPa differential pressure (ΔP) line and the 8m³/h flow line. Since point A is between the lines representing nominal diameter size 25mm and 32mm, the nominal diameter should be the larger one, i.e. 32mm.

In the case that other conditions remain the same but the specific gravity is 0.7, find out the intersection point B between the 0.8MPa differential pressure (ΔP) line and the 1.0 specific gravity line. Move from point B on the 0.7 specific gravity line parallelly to reach point C. Now draw a vertical line from point C until it intersects with the 8m³/h flow line. The intersection point is named D. Since point D is located between the lines representing nominal diameter size 20mm and 25mm, the nominal diameter should be the larger one, i.e. 25mm.

RD-17A TYPE DIAMETER SELECTION CHART (for water and liquids)

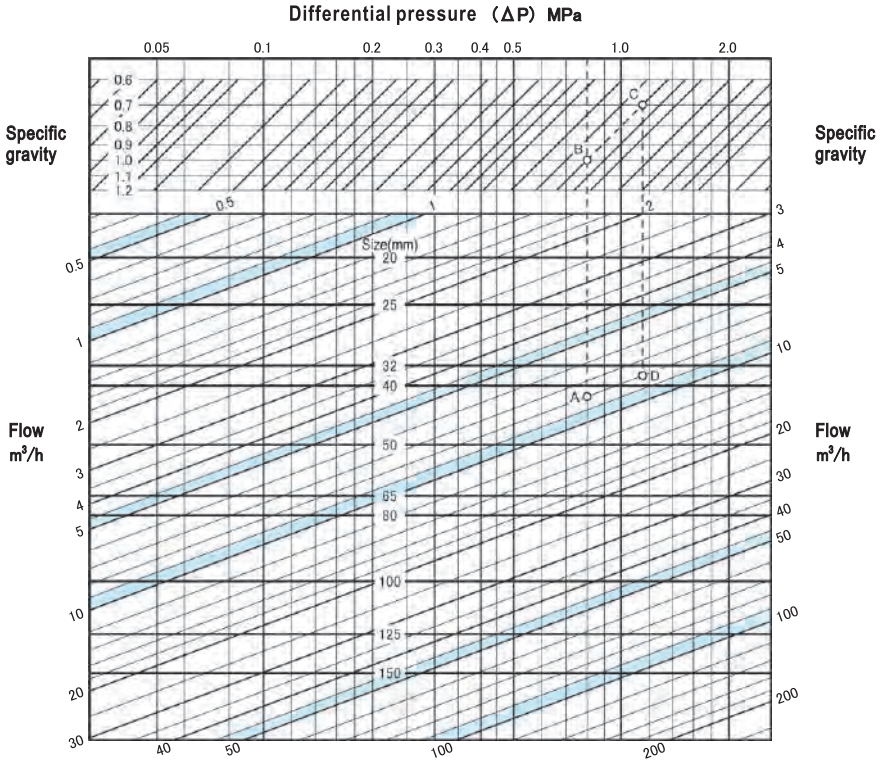

● HOW TO USE THE CHART

Example: Find out the nominal diameter meeting the following conditions:
Primary pressure: 1.1MPa
Secondary pressure: 0.3MPa
Specific gravity: 1 (water)
Flow: 8m³/h

Differential pressure(ΔP): 1.1−0.3=0.8MPa
Find out the intersection point A between the 0.8MPa differential pressure (ΔP) line and the 8m³/h flow line. Since point A is between the lines representing nominal diameter size 40mm and 50mm, the nominal diameter should be the larger one, i.e. 50mm.

In the case that other conditions remain the same but the specific gravity is 0.7, find out the intersection point B between the 1.0MPa differential pressure (ΔP) line and the 1.0 specific gravity line. Move from point B on the 0.7 specific gravity line parallelly to reach point C. Now draw a vertical line from point C until it intersects with the 8m³/h flow line. The intersection point is named D. Since point D is located between the lines representing nominal diameter size 32mm and 40mm, the nominal diameter should be the larger one, i.e. 40mm.

RD-7 Type Pressure Reducing Valve (for Oils)

RD-7 Type is a pressure reducing valve for kerosene, heavy oil and for burner of industrial boiler.
With good controllability, RD-7 Type allows only tiny change of pressure when the oil level of burner changes.



SPECIFICATIONS

Model name	RD-7		
Code name	RD7-BL	RD7-BM	RD7-BH
Size	10・15(⅜″・½″)		
Applicable fluid	Fuel oils		
Fluid temperature	5~120℃		
Fluid viscosity	Max. 700cSt		
Applicable primary pressure	Max. 1.0MPa		
Adjustable secondary pressure	0.01~0.08MPa	0.08~0.2MPa	0.2~0.3MPa
Maximum reducing rate	20:1		
Minimum pressure differential across the disc	0.05MPa		
Lock up pressure	Max. 0.01MPa		
Leakage allowance	Nil (Confirm at pressure gauge)		
End connection	Screwed JIS Rc		
Materials	Body(Cast iron), Disc & seat ring(Brass), Diaphragm(phosphor bronze)		
Valve body pressure test	Hydraulic 1.5MPa		
Mass	6kg		

PIPING EXAMPLE

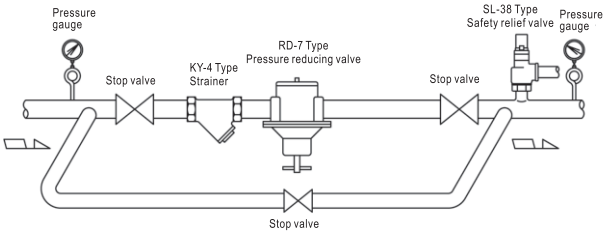

CONSTRUCTION

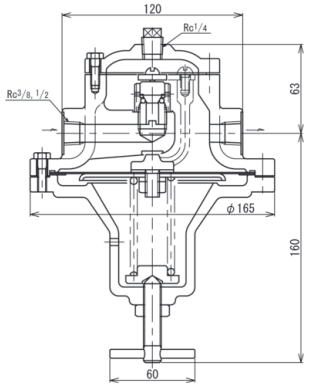

Follow the direction shown in the figure for installation.

PESSURE CHARACTERISTICS

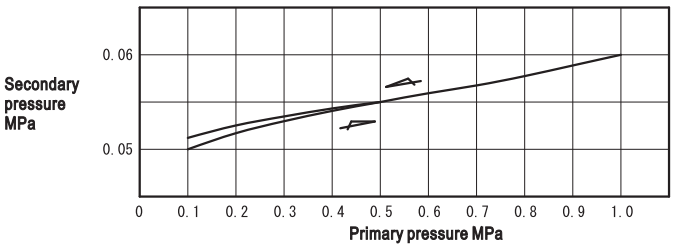

The secondary pressure is set at 0.1 MPa when primary pressure is 0.05 MPa.
The graph shows the change of secondary pressure when primary pressure changes between 0.1~1.0~0.1 MPa.

FLOW CHARACTERISTICS

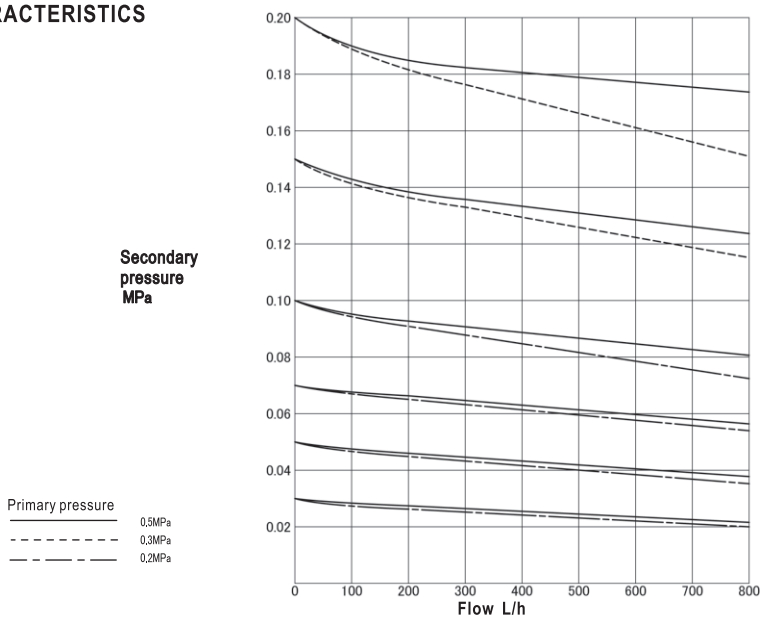

WHA-3 Type Water Hammer Arrestor (for Wate or Hot Water)

Water hammer arrestor can arrest the water hammer occurred in water pipeline or main water/hot water pipe of water receiving tanks in collective housing or office buildings. It can be installed on top of pipe shafts where multiple water hammer arrestors for general purpose or equipment use are applied, and in the case of gravity water supply system, it is an ideal device for protecting pressure reducing valves against water hammer.



CONSTRUCTION

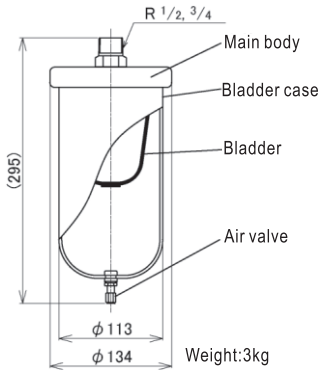

SELECTION OF WATER HAMMER ARRESTOR

● Calculation formula
(based on Greer Mercier's formula)

$$V=\frac{4\times10^{-3}\times Q\times P_{max}\times(0.0164L-T)}{(P_{max}-P_0)}$$

V: Absorption volume of water hammer arrestor (L)
※ Absorption volume of WHA-3 Type water hammer arrestor = 1L
Q: Flow rate (L/min)
P_0: Hydraulic pressure (MPa)
P_{max}: Impact pressure (MPa)
(Usually is Po ×1.5)
L: Length of pipe (m)
T: Valve closing time (sec)
※ For safety purpose, valve closing time should be 0 sec.

Note: The calculation formula above is for reference only. Depending on the site of installation, the number of water hammer arrestors may vary.

FEATURES

- The pressure of air loaded can be adjusted to match the site of installation. (The adjustment can be done using commercially available air filler.)
- Parts contacting with liquid are made of stainless steel. Synthetic rubber parts are coated.

SPECIFICATIONS

Model name	WHA-3
Code name	**WHA3-D**
Size	15·20(½″·¾″)
Applicable fluid	Water & hot water
Fluid temperature	5~60°C*
Applicable pressure	Max. 0.98 MPa
Applicable flow velocity	Max. 3m/s
Sealed air pressure	Preloaded pressure: 0.35 MPa (max. 0.98 MPa) (In actual use, loaded pressure needs to be adjusted at 70~80% of hydraulic pressure*.)
Internal volume	2L
End connection	Screwed JIS R
Materials	Body(Stainless steel), Bladder(Synthetic rubber + Coating), Bladder case(SPC)
Valve body pressure test	Hydraulic 1.75 MPa
Installation	Vertical mounting with screws facing up.

* If the difference between fluid temperature and the temperature of loaded air is larger than 40°C and it is necessary to reduce fluctuation of water supply pressure, then the loaded pressure should be adjusted to be 50~60% of hydraulic pressure.

PIPING EXAMPLE

Mounting on top of pipe shaft

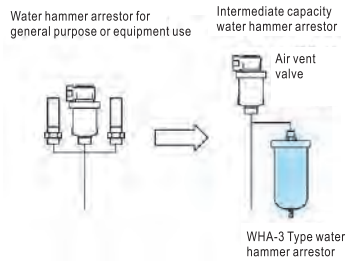

※ Please install a relief valve for pressure relief at the inlet of water hammer arrestor.
Before removing water hammer arrestor, open the relief valve to release pressure completely. Residual pressure in the pipeline may cause water hammer arrestor jump out and result in injury.

※ Since water hammer arrestor and connection pipes may vibrate when water hammer is absorbed, they need to be fixed tightly. (Water hammer arrestor can be fixed using commercially available pipe brackets for nominal diameter 100mm fittings.)

Water supply pipeline of water receiving tank

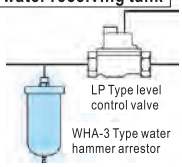

Protecting pressure reducing valve against water hammer in gravity water supply system

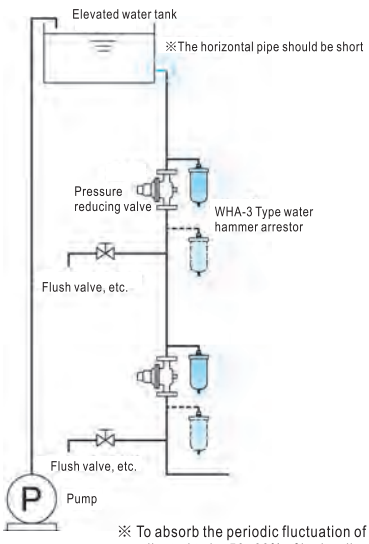

In water supply system using zoning pressure reducing valves in vertical pipeline of elevated water tank in high-rise buildings, vibration of pipeline or water hammer may occur due to operations of flush valves, etc.

■ Cause

The pressure at the primary side of pressure reducing valve drops due to operations of flush valve. After this, the pressure restores, and induces fluctuations of pressure which causes water hammer in the pipeline.

■ Countermeasure

By installing a water hammer arrestor at the primary side of pressure reducing valve, it is able to reduce momentary pressure drop and absorb water hammer. In addition, by making the length of the horizontal pipe from elevated water tank as short as possible, it also helps reducing water hammer.

※ To absorb the periodic fluctuation of water supply pressure, the loaded pressure of water hammer arrestor should be adjusted to be 50~60% of hydraulic pressure.

RD-20, 20F Type Pressure Reducing Valve (for Water, Liquids, Air or Gases)

Small-sized stainless steel valve for liquids and gasses. Ideal for applications where rust is greatly concerned and bronze material cannot be used. In addition, it can also be used in stainless steel piping for appartment water supply system.



RD-20 Type



RD-20F Type

FEATURES

- High corrosion resistance: The parts contacting liquid and the spring case are made of stainless steel and synthesized rubber.
- Compact, light weight, as result of redesigned flow route and adoption of rectangular spring etc.
- Flexible installation.
- Easy maintenance.
- For both liquids and gases, with primary pressure 2.0MPa.

SPECIFICATIONS

Model name	RD-20 Type L/M/H	RD-20F Type L/M/H
Code name	**RD20-D □**	**RD20F-D □**
	※ L, M or H for adjustable secondary pressure is required in □.	
Size	15 • 20 • 25(½″ • ¾″ • 1″)	
Applicable fluid	Water, liquids, air or gases(non-corrosive)	
Fluid temperature	5~60℃*1.	
Fluid viscosity	Liquids:Max. 800cSt	
Applicable primary pressure	Max. 2.0MPa	
Adjustable secondary pressure	**L:0.02~0.12MPa, M:0.1~0.3MPa, H:0.25~0.5MPa**	
Minimum pressure differential across the disc	0.05MPa	
Maximum reducing rate	Water, liquids:10:1*1, Air, gases:20:1	
Leakage allowance	Nil (Confirm at pressure gauge)	
End connection	Screwed JIS Rc	Flanged JIS 10, 20KRF
Valve body pressure test	Hydraulic 3.0MPa	1.5 times of flange rated pressure (Hydraulic)
Materials	Body(Stainless steel), Diaphragm & disc(Synthetic rubber)	

*1. Please contact our local agent in case of applicable temperature 60~90℃.
*2. Applicable temperature Max. 130℃ in temporary cleaning steam use at beverage industry, etc. are available upon your request.
(Applicable primary pressure Max. 1.0MPa, Maximum reducing rate 10:1)

CONSTRUCTION

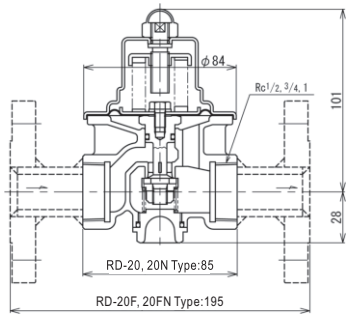

Weight
RD-20 :0.7kg
RD-20F :Size 15mm 2kg
:Size 20mm 2.3kg
:Size 25mm 3.3kg

PESSURE CHARACTERISTICS

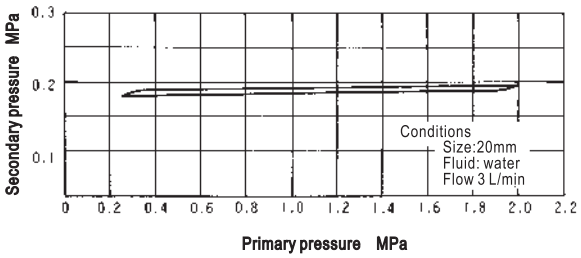

In the figure on the left, the primary pressure is set to be 1.0MPa when flow is 0 and the secondary pressure is 0.2MPa. It shows the change of the secondary pressure when the flow is 10% rated flow and the primary pressure changes from 1.0~0.25 to 2.0~1.0MPa. The range of change of secondary pressure
= less than set pressure × 10% (minimum 0.02MPa)

FLOW CHARACTERISTICS

(FOR WATER)

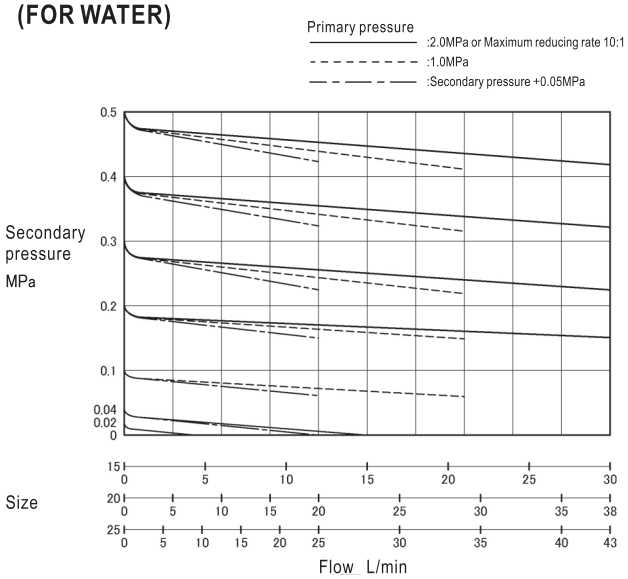

The flow of liquids other than water should be converted into flow of water.
Converted flow = Liquid flow × $\sqrt{G}$
G: specific gravity (See Page 279)

(FOR AIR)

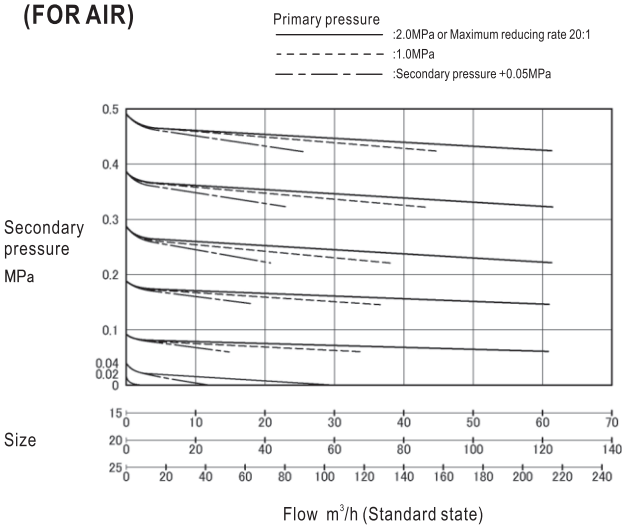

The flow of gases other than air should be converted into flow of air.
Converted air flow = gas flow × $\sqrt{G}$ = gas flow × $\sqrt{\frac{M}{28.96}}$
M: molecular weight of gas (See Page 279)

DATA/Pressure Reducing Valve (for Water or Liquids)

■ PIPING EXAMPLE

Fig 1. With bypass line

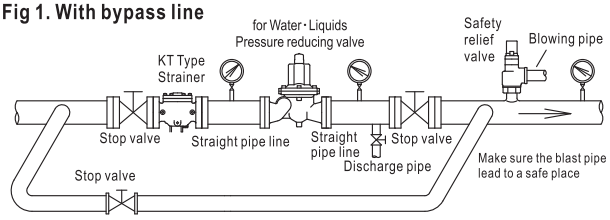

Fig 2. Without bypass line

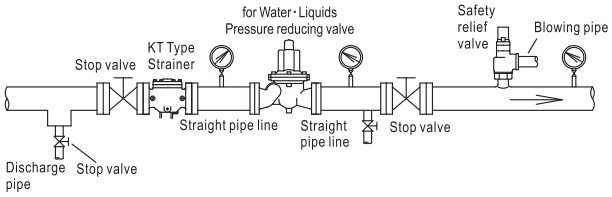

Fig 3. Screwed type connection with bypass line

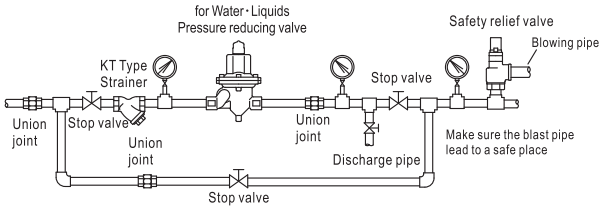

Note: See Fig.2 for piping with screw type end connection and without bypass pipe.

■ POINTS FOR INSTALLATION

○ **Installation of pressure reducing valve and piping**

1. If not otherwise specified, the pressure reducing valve should be vertical to horizontal pipe.
   Install safety valve or safety relief valve at secondary side.
   ※ 1. In the case of failure of pressure reducing valve, expansion of fluid due to rise of ambient temperature, or water hammer, the secondary pressure may rise and equipment may be damaged.
   ※ 2. See Tab.1 for set pressure of safety valve or safety relief valve.
   ※ 3. In the case safety valve or safety relief valve is used as an alarm, its nominal diameter should be big enough to allow discharge of 10% maximum flow of pressure reducing valve, which is about the leakage of pressure reducing valve. In very few cases, nominal diameter is selected by discharging amount of maximum flow for pressure reducing valve.(reference value: see Table 2 and Table 3)

■ TABLE1. SET PRESSURE FOR SAFETY RELIEF VALVE (MPa)

Set pressure of pressure reducing valve	Set pressure of safety valve※2.
0.1or less	+0.05 (+0.08)
over 0.1 and less than 0.4	+0.08 (+0.14)
0.4 or more and less than 0.6	+0.12 (+0.2)
0.6 or more and less than 0.8	+0.15 (+0.28)
0.8 or more and less than 1.0	+0.19
1.0 or more and 1.2 or less	+0.23

Add above value to set pressure of pressure reducing valve.

※1. The above value is added to the set pressure of pressure-reducing valve.
※2. The values in parentheses are applicable to soft-seated safety relief valve (SL-37V~40FV, 43V, 44V Type).

■ TABLE2. FLOW FOR SAFETY VALVE (Water)

SL-37~40 Type (kg/h)

Set pressure (MPa)	Size					
	15(½″)	20(¾″)	25(1″)	32(1¼″)	40(1½″)	50(2″)
0.05	375	640	930	1720	2690	4380
0.1	531	905	1310	2430	3810	6200
0.2	742	1260	1830	3400	5320	8650
0.3	875	1490	2160	4010	6280	10200
0.4	976	1660	2410	4480	7000	11300
0.5	1070	1820	2650	4910	7690	12400
0.6	1150	1970	2860	5310	8310	13500
0.7	1230	2110	3060	5680	8890	14400
0.8	1310	2240	3250	6030	9440	15300
0.9	1380	2360	3430	6360	9950	16100
1.0	1450	2470	3600	6680	10400	16900

■ TABLE3. FLOW FOR SAFETY VALVE (Air)

SL-37~40 Type (kg/h)

Set pressure (MPa)	Size					
	15(½″)	20(¾″)	25(1″)	32(1¼″)	40(1½″)	50(2″)
0.05	21.7	37	53.8	99.8	156	253
0.1	28.3	48.3	70.2	130	203	331
0.2	41.2	70.2	102	189	296	481
0.3	55.3	94.3	137	254	397	645
0.4	69.5	118	171	318	498	810
0.5	83.6	142	206	383	600	975
0.6	97.7	166	241	448	701	1140
0.7	111	190	276	513	803	1300
0.8	126	214	311	578	904	1470
0.9	140	238	346	643	1000	1630
1.0	154	262	381	708	1100	1790

3. Install strainer at the primary side of pressure reducing valve.
4. For devices that cannot be stopped, install bypass piping (with stop valve) from the primary side to the secondary side of pressure reducing valve (see Fig.1). If bypass piping is not suitable, then install stop valve for blowing which is derived from the main pipe before the primary side of pressure reducing valve, so as to make flushing possible(see Fig.2).
5. Install straight piping, stop valve, and pressure gauge before and after pressure reducing valve.
   In case of screwed type end connections, use union joint for easy maintenance and repair.(see Fig. 3).
6. In the case a solenoid valve (ON/OFF operation) is installed at the secondary side of pressure reducing valve, the solenoid valve should be 1~2m away from pressure reducing valve.

There should also be a 1~2m distance between pressure reducing valves in the case of 2-step pressure reduction. (See Fig.4, Fig.5)

Fig.4 Solenoid valve (on/off operation) installation

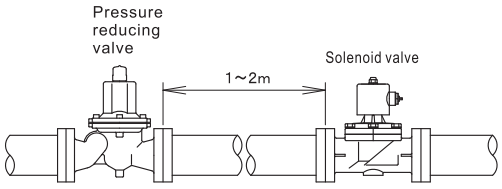

Fig.5 2-Step pressure reduction

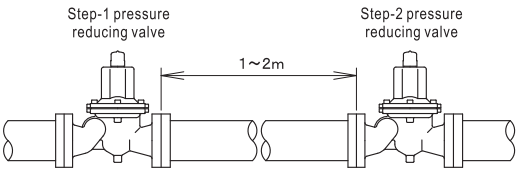

7. In water supply system with roof tank in tall/medium height buildings, water hammer may occur if one step or 2 more steps of pressure reducing valves are installed. In such case, install a water hammer preventing device at the primary side of pressure reducing valve. (See Fig.6)
8. Leave some space for dissembling and maintenance.
9. Apply appropriate support to pressure reducing valve to protect from the weight of piping itself, bending force, or vibration.
10. If it is possibility of freezing, perform thermal insulation or discharge the drain.
11. In the case of buried piping, install pressure reducing valve in pit (box).
    The pit should have drainage system to prevent accumulation of rain etc., and thermo-insulation or drainage may be necessary if there is possibility of freezing. (See Fig. 7)

Fig.6 Roof tank in tall/medium height building

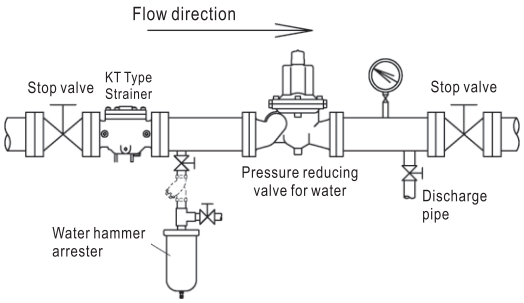

Fig.7 BURIED PIPING

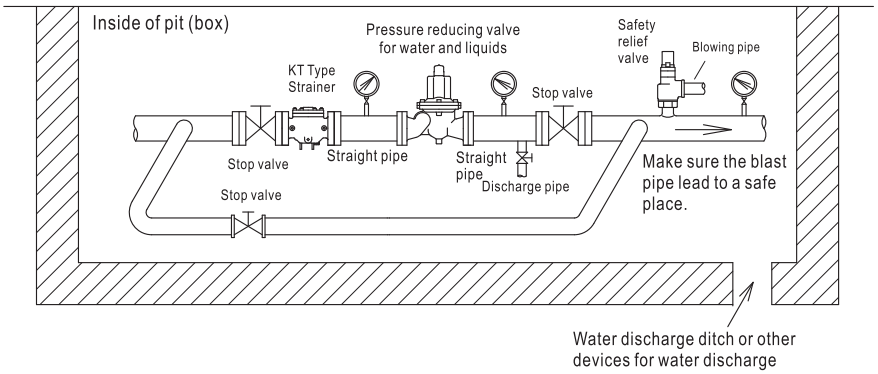

12. In most cases, the secondary pressure is not adjusted when product is delivered.
    Therefore, adjust the secondary pressure to a desired pressure.

※ The secondary pressure of a non-adjusted valve is near to zero.To adjust the secondary pressure, follow the following steps.

※ How to adjust the secondary pressure:

① Close the stop valves at primary and secondary sides.
② Open the blowing stop valve or stop valve in bypass and remove any content inside.Such operation is called flushing and should be carried out sufficiently by spending sufficient time on it.
Take care not to make the secondary pressure rise excessively.
③ Close the blowing stop valve or stop valve of bypass pipe.
④ Make sure there is not any spring load caused by adjusting screw.
⑤ Open the stop valve at primary side gradually.
⑥ Make sure you have adjusted the secondary pressure. Open the stop valve at the secondary side slightly to allow small flow.
⑦ Use the adjusting screw and apply a tiny spring load. Open the secondary stop valve gradually once fluid starts to flow.
⑧ Read the pressure gauge and apply more spring load to make the pressure reach the set pressure.
The secondary pressure rises if you turn the adjusting screw clockwise, and the pressure drops if you turn the screw counterclockwise.
⑨ Once the desired pressure is reached, use the lock nut to lock the adjusting screw.
After the screw is locked, the spring load will not change.

Fig.8 A TYPICAL ADJUSTING METHOD

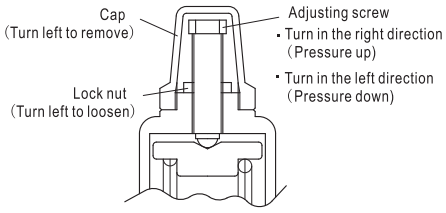

SAFETY VALVES
RELIEF VALVES

3

Safety relief valve has both function of safety valve and relief valve,also can cover wide range of application.
Lift type and full bore type safety valves can prevent accidents caused by abnormal pressure of pressure vessels, boilers, devices, and pipes.
Relief valve can be used on cold/hot water equipments, devices, and pumps.
Please select suitable model matching with condition of use.

■ SAFETY RELIEF VALVES (LIFT TYPE)

Model name	End connection	Size	Applicable pressure(MPa)	Applicable fluid	Materials		Page
					Body	Trim	
SL-37,38	Screwed	15~50(½″~2″)	0.05~1.0	Steam,air,gases or liquids	Stainless steel (Cast bronze)	Stainless steel	62
SL-37V,38V	Screwed	15~50(½″~2″)	0.05~1.0	Air,gases or liquids	Stainless steel (Cast bronze)	Stainless steel & Synthetic rubber	62
SL-39,40	Screwed	15~50(½″~2″)	0.05~1.0	Steam,air,gases or liquids	Stainless steel	Stainless steel	63
SL-39V,40V	Screwed	15~50(½″~2″)	0.05~1.0	Air,gases or liquids	Stainless steel	Stainless steel & Synthetic rubber	63
SL-39F,40F	Flanged	15~50(½″~2″)	0.05~1.0	Steam,air,gases or liquids	Stainless steel	Stainless steel	64
SL-39FV,40FV	Flanged	15~50(½″~2″)	0.05~1.0	Air,gases or liquids	Stainless steel	Stainless steel & Synthetic rubber	64
SL-43,44	Flanged	15~50(½″~2″)	0.05~1.0	Steam,air,gases or liquids	Cast iron	Stainless steel	66
SL-43V,44V	Flanged	15~50(½″~2″)	0.05~1.0	Air,gases or liquids	Cast iron	Stainless steel & Synthetic rubber	66

■ SAFETY VALVES (LIFT TYPE)

Model name	End connection	Size	Applicable pressure(MPa)	Applicable fluid	Materials		Page
					Body	Trim	
SL-23H,24H	Flanged	65(2½″)	0.035~1.0	Steam,air,gases or liquids	Cast iron	Stainless steel or Cast bronze	67
SL-23,24	Flanged	80~150(3″~6″)	0.035~1.0	Steam,air,gases or liquids	Cast iron	Stainless steel or Cast bronze	67
SL-45,46	Flanged	15~100(½″~4″)	0.035~2.0	Steam,air,gases or liquids	Ductile cast iron	Stainless steel	68
SL-7,8	Screwed	15~32(½″~1¼″)	0.035~3.0	Steam,air,gases or liquids	Forged steel or Stainless steel	Stainless steel	69
SL-9,10	Flanged	15~32(½″~1¼″)	0.035~3.0	Steam,air,gases or liquids	Forged steel or Stainless steel	Stainless steel	70
SL-11,12	Flanged	15~25(½″~1″)	0.035~3.0	Steam,air,gases or liquids	Cast steel	Stainless steel	71
		125·150(5″~6″)					
		40~100(1½″~4″)	2.0~3.0	Steam,air,gases or liquids			

■ RELIEF VALVES

Model name	End connection	Size	Applicable pressure(MPa)	Applicable fluid	Materials		Page
					Body	Trim	
SL-38E	Screwed	15~50(½″~2″)	0.035~1.0	Water,oil or liquids	Stainless steel (Cast bronze)	Stainless steel	72
SL-40E					Stainless steel		
SL-40EF	Flanged	15~50(½″~2″)	0.035~1.0	Water,oil or liquids	Stainless steel	Stainless steel	
SL-44E	Flanged	15~50(½″~2″)	0.035~1.0	Water,oil or liquids	Cast iron	Stainless steel	73
SL-24E	Flanged	65·80(2½″~3″)				Brass or Stainless steel	
SL-8ED	Screwed	15~32(½″~1¼″)	0.035~3.0	Water,oil or liquids	Forged steel or Stainless steel	Stainless steel	74
SL-10ED	Flanged						
SL-46ED	Flanged	40~75(1½″~3″)	0.035~2.0	Water,oil or liquids	Ductile cast iron	Stainless steel	75
SL-6ED	Flanged	40~75(1½″~3″)	0.035~2.0	Water,oil or liquids	Cast steel	Stainless steel	

■ SAFETY VALVES (FULL BORE TYPE)

Model name	End connection	Size	Applicable pressure(MPa)	Applicable fluid	Materials		Page
					Body	Trim	
SF-1H,2H	Screwed	20~50(¾″~2″)	0.1~2.0	Steam or air	Ductile cast iron	Stainless steel	78
SF-13,13L SF-14,14L	Flanged	25~150(1″~6″)	0.1~1.0	Refer to specifications	Cast iron	Stainless steel	79
SF-15,15L SF-16,16L	Flanged	40~150(1½″~6″)	0.1~1.0		Cast steel	Stainless steel	80
SF-17,17L SF-18,18L	Flanged	40~150(1½″~6″)	1.0~2.0		Cast steel	Stainless steel	81
SF-19,19L SF-20,20L	Flanged	15~25(½″~1″)	0.1~3.0		Cast steel	Stainless steel	82
		40~150(1½″~6″)	2.0~3.0				

SL-37, 38 Type Series Safety Relief Valve (Lift Type)

for Pressure Vessels, Hot Water Boilers, Heat Exchangers, Secondary Side of Pressure Reducing Valves, etc.

Safety relief valve is a category of valves with functions between those of safety valves, which are mainly for steam and gases, and those of relief valves, which are mainly for liquids.

Safety relief valve can be used for fluid, steam, gas, and liquid. The metal-seat type safety relief valve has simple structure, high corrosion resistance, and is made of high-grade materials. It is widely used as safety device for pressure vessels, machines/equipments, hot water boilers, water/hot water supply systems, air conditioning systems, and pressure reducing valves.



SL-37 Type Series



SL-38 Type Series

PRESSURE DIVISION (MPa)

Code No.	Pressure division
1	0.05~0.1
2	Over 0.1~0.2
3	Over 0.2~0.5
4	Over 0.5~1.0

FEATURES

- Bronze spring case, Stainless steel seat and disc, Stainless steel spring. A sealed type safety relief valve with high corrosion resistance.
- Suitable for three fluids, including steam, gas, and liquid (metal-seat type).
- 1~2 sizes smaller and lighter than prior products of the same type.

SPECIFICATIONS

Type		Standard item(Metal seat type)		Soft seat type	
Model name		SL-37	SL-38	SL-37V	SL-38V
Code name		SL37-D ☐	SL38-D ☐	SL37V-D ☐	SL38V-D ☐
		※ Code No. of pressure division is required in ☐.			
Cap type(Closed type)		With lever*1.	Without lever	With lever	Without lever
Applicable fluid		Steam, air, gases & liquids*2.		Air, gases & liquids*2.	
Fluid temperature		Max. 150℃(Max. 225℃*1.)	Max. 225℃	Max. 120℃	
Set pressure range		0.05~1.0MPa			
End connection		Screwed JIS Rc			
Materials	Body	Stainless steel(Spring case:Cast bronze)			
	Disc	Stainless steel		Stainless steel(Disc tip:Synthetic rubber)	
Valve body pressure test		Hydraulic 2.0MPa			

*1. For steam, the valve is provided with a release lever and can be used at steam temperature up to 225℃.
*2. For application in a system that deals with kerosene or solvent, please contact our agent in your area.

DIMENSIONS (mm)

Size	Seat opening dia. D	Effective area (mm^2) $\pi D\ell$	Lift ℓ	Face to Face L_1	Face to Face L_2	Height H SL-37,37V Type	Height H SL-38,38V Type	End connection d	Mass(kg) SL-37,37V Type	Mass(kg) SL-38,38V Type
15(½″)	14(13)	17.5	0.4(0.43)	30	36	94	84	½″	0.6	0.5
20(¾″)	19(18.6)	29.8	0.5(0.51)	35	40	99	89	¾″	0.7	0.6
25(1″)	23(21.9)	43.3	0.6(0.63)	40	46	102	92	1″	0.9	0.8
32(1¼″)	32(29.4)	80.3	0.8(0.87)	50	54	124	114	1¼″	1.5	1.4
40(1½″)	40(36.7)	125.6	1.0(1.09)	55	60	130	120	1½″	2	1.9
50(2″)	50(47.1)	204.1	1.3(1.38)	65	73	165	151	2″	3.6	3.4

* Figures in ( ) are for SL-37V, 38V Type.

CONSTRUCTION

SL-37 Type

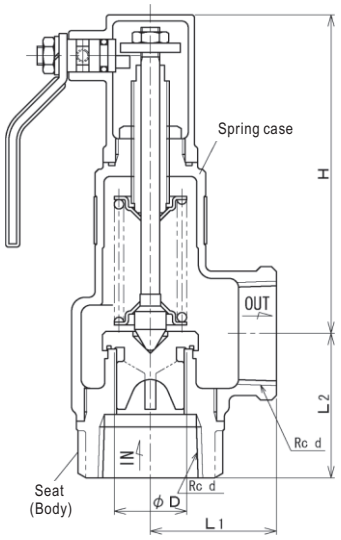

SL-38 Type

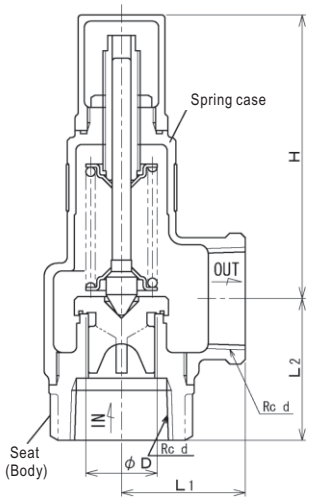

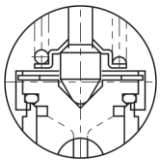

Soft-seat type

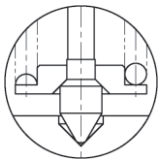

Size 50mm

Note: See Page 65 for relieving capacity.

SL-39, 40 Type Series Safety Relief Valve (Lift Type)

for Stainless Steel Lines of Pressure Vessels, Hot Water Boilers, Heat Exchangers, Secondary Side of Pressure Reducing Valves, etc.

Safety relief valve is a category of valves with functions between those of safety valves, which are mainly for steam and gases, and those of relief valves, which are mainly for liquids.

Safety relief valve has simple structure, high corrosion resistance, and is made of high-grade materials. It is widely used as safety device for pressure vessels, machines/equipments, hot water boilers, water/hot water supply systems, air conditioning systems, and pressure reducing valves.

FEATURES

- A sealed type safety relief valve with high corrosion resistant stainless steel spring case, seat and disc, and stainless steel spring.
- 1~2 sizes smaller and lighter than prior products of the same type.

SPECIFICATIONS

Type		Standard item(Metal seat type)		Soft seat type	
Model name		SL-39	SL-40	SL-39V	SL-40V
Code name		SL39-D ☐	SL40-D ☐	SL39V-D ☐	SL40V-D ☐
		※ Code No. of pressure division is required in ☐.			
Cap type(Closed type)		With lever*1.	Without lever	With lever	Without lever
Applicable fluid		Steam, air, gases & liquids*2.		Air, gases & liquids*2.	
Fluid temperature		Max. 150℃(Max. 235℃*1.)	Max. 235℃	Max. 120℃	
Set pressure range		0.05~1.0MPa			
End connection		Screwed JIS Rc			
Materials	Body	Stainless steel(Spring case:Stainless steel)			
	Disc	Stainless steel		Stainless steel(Disc tip:Synthetic rubber)	
Valve body pressure test		Hydraulic 2.0MPa			

*1. For steam, the valve is provided with a release lever and can be used at steam temperature up to 235℃.
*2. Contact our local agent for gasoline, kerosene and solvent medium use.

DIMENSIONS

(mm)

Size	Seat opening dia. D	Effective area (mm²) π Dℓ	Lift ℓ	Face to Face		Height H		End connection d	Mass(kg)	
				L_1	L_2	SL-39,39V Type	SL-40,40V Type		SL-39,39V Type	SL-40,40V Type
15(½″)	14(13)	17.5	0.4(0.43)	30	36	96	85	½″	0.6	0.5
20(¾″)	19(18.6)	29.8	0.5(0.51)	35	40	100	89	¾″	0.7	0.6
25(1″)	23(21.9)	43.3	0.6(0.63)	40	46	104	93	1″	0.9	0.8
32(1¼″)	32(29.4)	80.3	0.8(0.87)	50	54	126	115	1¼″	1.5	1.4
40(1½″)	40(36.7)	125.6	1.0(1.09)	55	60	131	120	1½″	2	1.9
50(2″)	50(47.1)	204.1	1.3(1.38)	65	73	166	152	2″	3.6	3.4

* Figures in ( ) are for SL-39V, 40V Type.



SL-39 Type Series



SL-40 Type Series

CONSTRUCTION

SL-39 Type

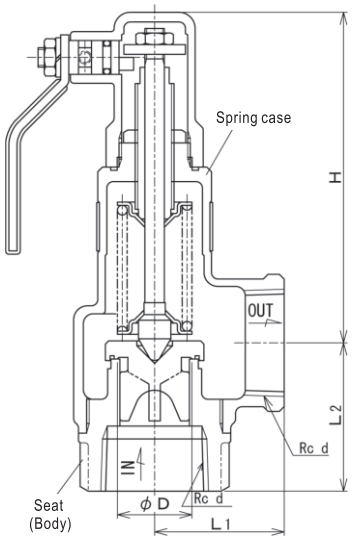

SL-40 Type

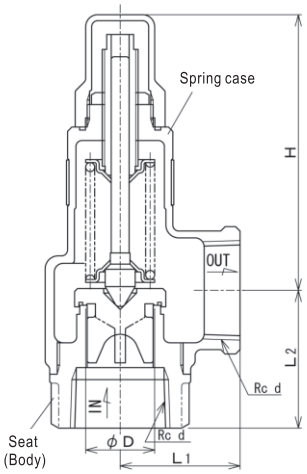

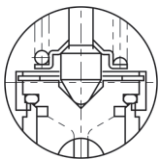

Soft-seat type

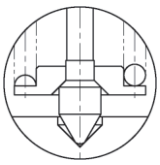

Size 50mm

PRESSURE DIVISION

(MPa)

Code No.	Pressure division
1	0.05~0.1
2	Over 0.1~0.2
3	Over 0.2~0.5
4	Over 0.5~1.0

Note: See Page 65 for relieving capacity.

SL-39F, 40F Type Series Safety Relief Valve (Lift Type)

for Stainless Steel Lines of Pressure Vessels, Hot Water Boilers, Heat Exchangers, Secondary Side of Pressure Reducing Valves, etc.

Safety relief valve is a category of valves with functions between those of safety valves, which are mainly for steam and gases, and those of relief valves, which are mainly for liquids.

Safety relief valve has simple structure, high corrosion resistance, and is made of high-grade materials. It is widely used as safety device for pressure vessels, machines/equipments, hot water boilers, water/hot water supply systems, air conditioning systems, and pressure reducing valves.



SL-39F Type Series



SL-40F Type Series

PRESSURE DIVISION (MPa)

Code No.	Pressure division
1	0.05~0.1
2	Over 0.1~0.2
3	Over 0.2~0.5
4	Over 0.5~1.0

FEATURES

- A sealed type safety relief valve with high corrosion resistant stainless steel spring case, seat and disc, and stainless steel spring.
- 1~2 sizes smaller and lighter than prior products of the same type.

SPECIFICATIONS

Type		Standard item(Metal seated type)		Soft seat type	
Model name		SL-39F	SL-40F	SL-39FV	SL-40FV
Code name		SL39F-D ☐	SL40F-D ☐	SL39FV-D ☐	SL40FV-D ☐
		※ Code No. of pressure division is required in ☐.			
Cap type(Closed type)		With lever*1.	Without lever	With lever	Without lever
Applicable fluid		Steam, air, gases & liquids*2.		Air, gases & liquids*2.	
Fluid temperature		Max. 150℃(Max. 235℃*1.)	Max. 235℃	Max. 120℃	
Set pressure range		0.05~1.0MPa			
End connection		Flanged JIS 10K(Loose type)			
Materials	Body	Stainless steel(Spring case:Stainless steel)			
	Disc	Stainless steel		Stainless steel(Disc tip:Synthetic rubber)	
Valve body pressure test		Hydraulic 2.0MPa			

*1. For steam, the valve is provided with a release lever and can be used at steam temperature up to 235℃.
*2. Contact our local agent for gasoline, kerosene and solvent medium use.

DIMENSIONS (mm)

Size	Seat opening dia. D	Effective area (mm²) π Dℓ	Lift ℓ	Face to Face L1	Face to Face L2	Height H SL-39F,39FV Type	Height H SL-40F,40FV Type	f	Mass(kg) SL-39F,39FV Type	Mass(kg) SL-40F,40FV Type
15(½″)	14(13)	17.5	0.4(0.43)	90	110	96	85	5	2.2	2.1
20(¾″)	19(18.6)	29.8	0.5(0.51)	95	115	100	89	5	2.6	2.5
25(1″)	23(21.9)	43.3	0.6(0.63)	100	124	104	93	5	4.1	4
32(1¼″)	32(29.4)	80.3	0.8(0.87)	110	138	126	115	5	5.6	5.5
40(1½″)	40(36.7)	125.6	1.0(1.09)	125	154	131	120	5	6.6	6.5
50(2″)	50(47.1)	204.1	1.3(1.38)	135	164	166	152	5	9.2	9

* Figures in ( ) are for SL-39FV, 40FV Type.

CONSTRUCTION

SL-39F Type

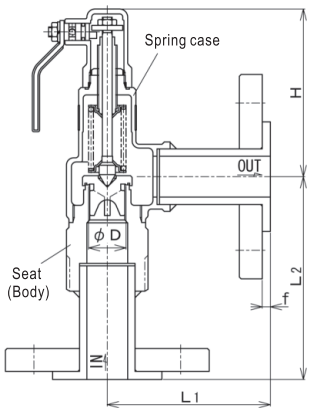

SL-40F Type

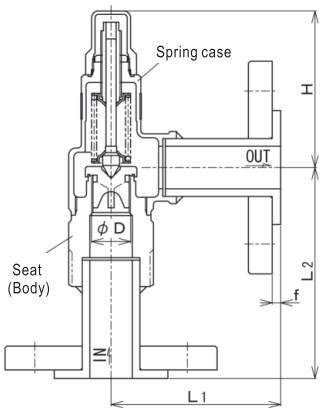

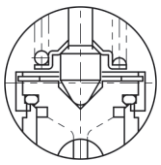

Soft-seat type

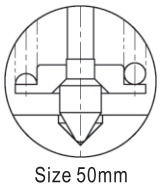

Size 50mm

Note: See Page 65 for relieving capacity.

Discharge Capacity

1. RELIEVING CAPACITY FOR STEAM
(Pressure Vessel Construction Code)

(kg/h)

Size	Set pressure(MPa)										
	0.05	0.1	0.2	0.3	0.4	0.5	0.6	0.7	0.8	0.9	1.0
15(½″)	13.5	17.5	25.4	34.2	42	50.6	59.2	67.7	76.3	84	92.4
20(¾″)	23.1	29.8	43.3	58.2	71.6	86.2	100	115	129	143	157
25(1″)	33.5	43.4	63	84.6	104	125	146	167	188	207	228
32(1¼″)	62.2	80.4	116	156	193	232	271	310	350	385	424
40(1½″)	97.4	125	182	245	302	363	424	486	547	602	663
50(2″)	158	204	297	399	490	590	690	790	890	979	1070

※ In house data

Calculating formula:

$Qm=5.25CK_{dr}'AP$

Qm: Relieving capacity kg/h
K_{dr}' : 0.864※ (Certified derated coefficient of discharge)
A : Seat opening area mm^2
P : Absolute pressure at relieving capacity (MPa・A)
(Select the larger one of set pressure × 1.1 + 0.101 or set pressure + 0.020 + 0.101.)

C': Coefficient depending on the nature of steam
(See Tab.1, Page 87.)
For saturated steam, see the following table:

Absolute pressure at relieving capacity (MPa・A)	C': Coefficient depending on the nature of steam
Max. 0.5	1
Over 0.5~1.0	0.98
Over 1.0~2.0	0.97
Over 2.0	0.96

For superheated steam, see the table 1 in Page 87.

2. RELIEVING CAPACITY FOR AIR
(Pressure Vessel Construction Code)

(kg/h)

Size	Set pressure(MPa)										
	0.05	0.1	0.2	0.3	0.4	0.5	0.6	0.7	0.8	0.9	1.0
15(½″)	21.7	28.3	41.2	55.3	69.5	83.6	97.7	111	126	140	154
20(¾″)	37	48.3	70.2	94.3	118	142	166	190	214	238	262
25(1″)	53.8	70.2	102	137	171	206	241	276	311	346	381
32(1¼″)	99.8	130	189	254	318	383	448	513	578	643	708
40(1½″)	156	203	296	397	498	600	701	803	904	1000	1100
50(2″)	253	331	481	645	810	975	1140	1300	1470	1630	1790

※ In house data

Calculating formula:

$Qm=C''K_{dr}'P_1AK_b\sqrt{\frac{M}{ZT}}$

Qm : Relieving capacity kg/h
C" : 27.03 (coefficient)
K_{dr}' : 0.864※ (Relieving coefficient)
P_1 : Absolute pressure at relieving capacity (MPa・A)
(Select the larger one of set pressure × 1.1 + 0.101 or set pressure + 0.020 + 0.101.)

A : Seat opening area mm^2
K_b: Back pressure compensation coefficient, which depends on P_2/P_1 and κ .
(See Tab.6, Page 89)
P_2: Absolute pressure of back pressure (MPa・A)
M : 28.96 (Molecular weight of air)
Z : 1※ (Compression coefficient)
T : 293 (Absolute temperature, K)
■Converting kg/h to m^3/h (standard state) (for reference only)
Density of air 1.226kg/m^3 (standard state, 15℃,1atm)

$$m^3/h(\text{standard state}) = \frac{\text{Value in the above table (kg/h)}}{1.226kg/m^3}$$

3. RELIEVING CAPACITY FOR WATER AND HOT WATER
(Pressure Vessel Construction Code)

(kg/h)

Size	Set pressure(MPa)										
	0.05	0.1	0.2	0.3	0.4	0.5	0.6	0.7	0.8	0.9	1.0
15(½″)	375	531	742	875	976	1070	1150	1230	1310	1380	1450
20(¾″)	640	905	1260	1490	1660	1820	1970	2110	2240	2360	2470
25(1″)	930	1310	1830	2160	2410	2650	2860	3060	3250	3430	3600
32(1¼″)	1720	2430	3400	4010	4480	4910	5310	5680	6030	6360	6680
40(1½″)	2690	3810	5320	6280	7000	7690	8310	8890	9440	9950	10400
50(2″)	4380	6200	8650	10200	11300	12400	13500	14400	15300	16100	16900

Calculating formula:

$W=87.7S\sqrt{(P_1+0.1)\,\kappa\,\gamma_1}$

$\left(S=\frac{W}{87.7\sqrt{(P_1+0.1)\,\kappa\,\gamma_1}}\right)$

(If $(P_1+0.1)\,\kappa > (P_1-P_2)$, replace $(P_1+0.1)\,\kappa$ with (P_1-P_2))

W: Relieving capacity kg/h
S: Seat opening area mm^2
P_1: Relieving pressure MPa
Set pressure×1.2: 0.05MPa≦set pressure<0.17MPa
Set pressure+0.034: 0.17MPa≦set pressure<0.34MPa
Set pressure×1.1: 0.34MPa≦set pressure

P_2: Outlet pressure MPa
κ : Coefficient of correction (see Fig.2 in Page 90)
Δt: difference between saturation temperature at P_1 (Relieving pressure) and the temperature of water/hot water at inlet side of valve℃
γ_1: Density of water/hot water at inlet side of valve kg/L (water(15℃)=1)
■Converting kg/h to L/min (for reference only)

Weight of 1 liter water (L)≒ 1kg,

$$L/min = \frac{\text{Value in the above table (kg/h=L/h)}}{60}$$

SL-43, 44 Type Series Safety Relief Valve (Lift Type)

for Pressure Vessels, Secondary Side of Pressure Reducing Valves, etc.

These safety relief valves are designed as intermediary products with advantages of safety valves mainly used for steam and gases and those for liquids.
Compared with conventional safety valves made of cast iron, these products are shorter in height and therefore lighter in weight (based on in-house data).



SL-43 Type



SL-44 Type

FEATURES

- Most parts (excluding main body and spring case) are made of corrosion-resistant stainless steel.
- 22~36% lighter than old models.
- Can be used in the same way as SL-37, 38 Type series. (Parts other than main body, spring case, and valve seat are the same as those of SL-37, 38 Type and have the same performance.)

SPECIFICATIONS

Type		Standard item(Metal seat type)		Soft seat type	
Model name		SL-43	SL-44	SL-43V	SL-44V
Code name		SL43-G□	SL44-G□	SL43V-G□	SL44V-G□
		※ Code No. of pressure division is required in □.			
Cap type		With lever*1.	Without lever	With lever	Without lever
Applicable fluid		Steam, gases & liquids*2.		Air, gases & liquids*2.	
Fluid temperature		Max. 150 °C (Max. 220 °C. *1)	−5~184 °C*3.	Max. 120 °C	
Set pressure range		0.05~1.0MPa			
End connection		Flanged JIS 10KFF			
Materials	Body	Cast iron			
	Disc & seat ring	Stainless steel		Stainless steel(disc tip:Synthetic rubber)	
Valve body pressure test		Hydraulic 1.5MPa			

*1. The product for steam has open lever and the applicable temperature is up to 220 °C.
*2. For application in a system that deals with kerosene or solvent, please contact our agents in your area.
*3. Products for fluid temperature up to 220°C are also available.

DIMENSIONS

(mm)

Size	Seat opening dia. D	Effective area (mm^2) $\pi D\ell$	Lift ℓ	Face to Face		Height H		Mass(kg)	
				L_1	L_2	SL-43,43V Type	SL-44,44V Type	SL-43,43V Type	SL-44,44V Type
15(½″)	14(13)	17.5	0.4(0.43)	70	70	99	89	2.5	2.4
20(¾″)	19(18.6)	29.8	0.5(0.51)	75	75	103	94	3	2.9
25(1″)	23(21.9)	43.3	0.6(0.63)	85	85	108	98	4.6	4.5
32(1 ¼″)	32(29.4)	80.3	0.8(0.87)	95	90	131	122	6.2	6.1
40(1 ½″)	40(36.7)	125.6	1.0(1.09)	100	95	137	128	7.8	7.7
50(2″)	50(47.1)	204.1	1.3(1.38)	110	105	171	158	11.7	11.5

* Figures in ( ) are for SL-43V, 44V Type.

Flange code JIS 10KFF

CONSTRUCTION

SL-43 Type

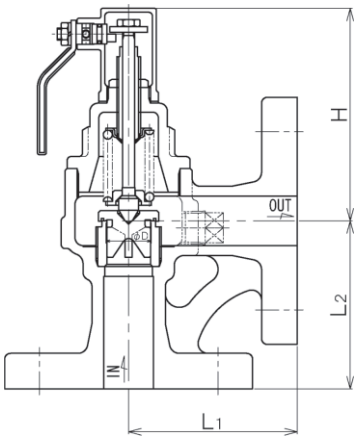

SL-44Type

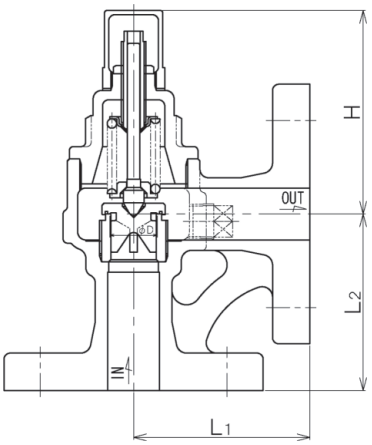

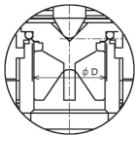

Soft-seat type

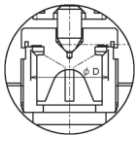

Size 32mm

Note: See Page 65 for relieving capacity.

PRESSURE DIVISION

(MPa)

Code No.	Pressure division
1	0.05~0.1
2	Over 0.1~0.2
3	Over 0.2~0.5
4	Over 0.5~1.0

SL-23H, 23, 24H, 24 Type Safety Relief Valve (Lift Type)



SL-23H Type



SL-24H Type

■ CONSTRUCTION

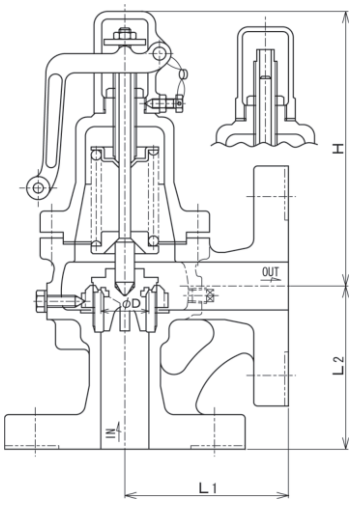

Depending on nominal diameter, the structure of the valve may be different from what is shown in the drawing.

■ SPECIFICATIONS

Model name		SL-23H	SL-23	SL-24H	SL-24
Code name		SL23H-G□	SL23-B□	SL24HB-G□*2.	SL24-B□
		※ Code No. of pressure division is required in □.			
Cap type		With lever		Without lever	
Size		65(2½″)	80~150(3″~6″)	65(2½″)	80~150(3″~6″)
Applicable fluid		Steam*1. & air		Steam, air, gases*1. & (liquids*2.)	
Fluid temperature		−5~220℃		−5~184℃*3.	
Set pressure range		0.035~1.0MPa*1.			
End connection		Flanged JIS 10KFF*4.			
Materials	Body	Cast iron			
	Disc	Stainless steel	Cast bronze*5.	Stainless steel	Cast bronze*5.
	Seat ring	Size 65~100mm:Stainless steel, Size 125~150mm:Cast bronze			
Valve body pressure test		Hydraulic 1.5MPa			

*1. When applicable standard is JIS B8210, the set pressure is limited due to the material of pressure-resistant parts. For details, please refer to Page 83.
*2. For liquids, size 65mm, use code name SL24HW-G□.
*3. Applicable temperature Max. 220℃ is available upon your request.
*4. RF flange for outlet side is available upon your request.
*5. For valve disc and seat made of stainless steel, please contact our agents in your area.

■ DIMENSIONS

(mm)

Size d	Seat opening dia. D	Effective area (mm²) π Dℓ	Lift ℓ	Face to Face		Height H		Mass(kg)	
				L_1	L_2	SL-23H,23 Type	SL-24H,24 Type	SL-23H,23 Type	SL-24H,24 Type
65(2 ½″)	65	346.9	1.7	135	115	293	291	23	22
80(3″)	78.4	492.3	2.0	145	125	375	371	33	30
100(4″)	99.4	780.2	2.5	160	150	439	435	52	46
125(5″)	130 (125)	1347.0 (1256.0)	3.3 (3.2)	182	182	672	674	120	114
150(6″)	160 (150)	2009.6 (1789.8)	4.0 (3.8)	219	208	725	727	151	145

* Figures in ( ):Size 125mm and 150mm for cast iron body with stainless steel disc and seat ring.

Flange code JIS 10KFF

■ PRESSURE DIVISION

(MPa)

Code No.	SL23H-G□,SL24HB-G□	SL24HW-G□	SL23-B□, SL24-B□	
	Size 65mm	Size 65mm	Size 80~100mm	Size125~150mm
1	0.035~0.15	0.035~0.07	0.035~0.15	0.035~0.07
2	Over 0.15~0.6	Over 0.07~0.15	Over 0.15~0.4	Over 0.07~0.1
3	Over 0.6~1.0	Over 0.15~0.3	Over 0.4~0.7	Over 0.1~0.3
4		Over 0.3~0.6	Over 0.7~1.0	Over 0.3~0.5
5		Over 0.6~1.0		Over 0.5~0.7
6				Over 0.7~0.85
7				Over 0.85~1.0

*Code No. of pressure division is required in □.

SL-45, 46 Type Safety Relief Valve (Lift Type)



SL-45 Type



SL-46 Type

■ CONSTRUCTION

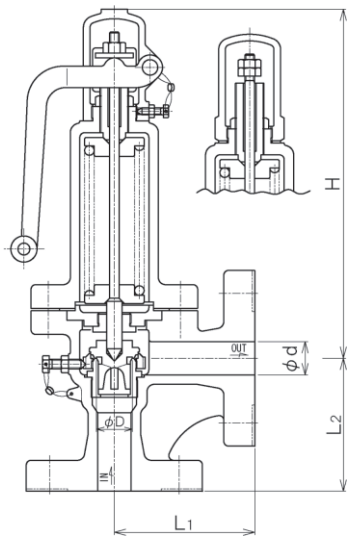

Depending on nominal diameter, the structure of the valve may be different from what is shown in the drawing.

■ SPECIFICATIONS

Model name	SL-45	SL-46
Code name	**SL45-M☐**	**SL46-M☐**
	※ Code No. of pressure division is required in ☐.	
Cap type	With lever	Without lever
Applicable fluid	Steam & air	Steam, air, gases & liquids
Size	15~100(½″~4″)	
Fluid temperature	−5~220℃	
Set pressure range	**0.035~2.0MPa**	
End connection	Flanged JIS 10, 16, 20 KFF *1.	
Materials	Body(Ductile cast iron*2.),Disc&seat ring(Stainless steel)	
Valve body pressure test	1.5 times of flange rated pressure. (Hydraulic)	

∗1. Products with RF flange at inlet/outlet are also available.
∗2. Products above 40mm in size with main body made of cast steel (SL-5,6 Type) or stainless steel (SL-5,6 Type) are also available (set pressure range may vary due to different sizes).
∗3. Products with cast steel main body (SL-5,6 Type) and ASME (ANSI) Class 150, 300 flange is also available.

■ DIMENSIONS

(mm)

Size d	Seat opening dia. D	Effective area (mm^2) π Dℓ	Lift ℓ	Face to Face		Height H		Mass(kg)	
				L_1	L_2	SL-45Type	SL-46Type	SL-45Type	SL-46Type
15(½″)	15	18.8	0.4	75	65	174	167	4.3	4.2
20(¾″)	20	31.4	0.5	80	75	198	190	4.9	4.8
25(1″)	25	54.9	0.7	95	90	245	242	9	8.7
40(1 ½″)	40	125.6	1.0	110	100	253	251	13	13
50(2″)	50	204.1	1.3	120	110	297	296	20.5	20
65(2 ½″)	65	346.9	1.7	130	120	369	365	28	28
75*(3″)	75	447.4	1.9	145	135	407	403	46	44
100(4″)	100	785.0	2.5	170	155	557	552	74	70

※The connecting flange is size 80mm JIS flange.

Flange code JIS 20K

■ PRESSURE DIVISION (Ductile cast iron)

(MPa)

Code No.	Size 15mm	Size 20mm	Size 25mm	Size 40mm
1	0.035~0.07	0.035~0.07	0.035~0.07	0.035~0.07
2	Over 0.07~0.1	Over 0.07~0.1	Over 0.07~0.1	Over 0.07~0.1
3	Over 0.1~0.35	Over 0.1~0.35	Over 0.1~0.35	Over 0.1~0.35
4	Over 0.35~0.5	Over 0.35~0.5	Over 0.35~0.5	Over 0.35~0.5
5	Over 0.5~0.7	Over 0.5~0.7	Over 0.5~0.7	Over 0.5~0.85
6	Over 0.7~0.85	Over 0.7~0.85	Over 0.7~0.85	Over 0.85~1.3
7	Over 0.85~1.0	Over 0.85~1.0	Over 0.85~1.0	Over 1.3~1.6
8	Over 1.0~1.3	Over 1.0~1.6	Over 1.0~1.3	Over 1.6~2.0
9	Over 1.3~1.6	Over 1.6~2.0	Over 1.3~1.6	
A	Over 1.6~2.0		Over 1.6~2.0	

(MPa)

Code No.	Size 50mm	Size 65mm	Size 75mm	Size 100mm
1	0.035~0.07	0.035~0.07	0.035~0.07	0.035~0.07
2	Over 0.07~0.1	Over 0.07~0.1	Over 0.07~0.1	Over 0.07~0.1
3	Over 0.1~0.35	Over 0.1~0.35	Over 0.1~0.35	Over 0.1~0.35
4	Over 0.35~0.5	Over 0.35~0.5	Over 0.35~0.5	Over 0.35~0.5
5	Over 0.5~0.7	Over 0.5~0.85	Over 0.5~0.7	Over 0.5~0.7
6	Over 0.7~1.0	Over 0.85~1.0	Over 0.7~0.85	Over 0.7~0.85
7	Over 1.0~1.3	Over 1.0~1.3	Over 0.85~1.0	Over 0.85~1.0
8	Over 1.3~1.6	Over 1.3~1.6	Over 1.0~1.6	Over 1.0~1.3
9	Over 1.6~2.0	Over 1.6~2.0	Over 1.6~2.0	Over 1.3~1.6
A				Over 1.6~2.0

SL-7, 8 Type Safety Valve (Lift Type)



SL-7 Type



SL-8 Type

■ CONSTRUCTION

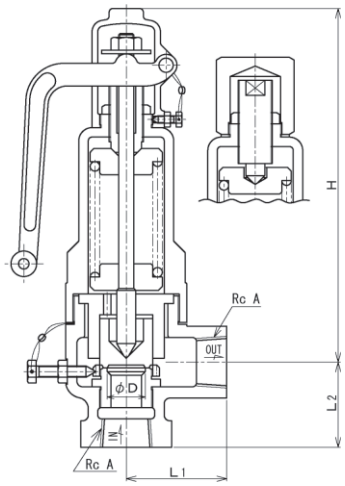

Depending on models, the structure may be different from what is shown in the above figure.

■ SPECIFICATIONS

Model name		SL-7		SL-8	
Code name		SL7-N☐	SL7-D☐	SL8-N☐	SL8-D☐
		※ Code No. of pressure division is required in ☐.			
Cap type		With lever		Without lever	
Applicable fluid		Steam & air		Steam, air, gases & liquids	
Fluid temperature		−5~235℃*1.	−5~235℃*2.	−5~235℃*1.	−5~150℃*2.
Set pressure range		0.035~3.0MPa			
End connection		Screwed JIS Rc			
Materials	Body	Forged steel	Stainless steel	Forged steel	Stainless steel
	Disc	Stainless steel*4.			
	Seat ring	Stainless steel*4.			
Valve body pressure test		Set pressure 0.035MPa~1.0MPa:Hydraulic 2.0MPa Set pressure1.0MPa~2.0MPa:Hydraulic 4.0MPa Set pressure2.0MPa~3.0MPa:Hydraulic 6.0MPa			

*1. Please contact our local agent in case of fluid temperature Max. 350°C.
*2. Please contact our local agent in case of fluid temperature Max. 300°C.
*3. NPT screw end connection is availab upon your request.
*4. For those exceeding 2.0MPa as the pressure division, the stellited deposition (welding) shall be executed on the disc and the seat ring.

■ DIMENSIONS

(mm)

Size d	Seat opening dia. D	Effective area (mm²) π Dℓ	Lift ℓ	Face to Face		Height H		End connection d	Mass(kg)	
				L_1	L_2	SL-7 Type	SL-8 Type		SL-7 Type	SL-8 Type
15(½″)	15	18.8	0.4	50	45	207	192	½″	2.7	2.5
20(¾″)	20	31.4	0.5	50	45	207	192	¾″	2.7	2.5
25(1″)	25	54.9	0.7	70	55	254	244	1″	6.5	6.2
32(1¼″)	32	80.3	0.8	70	55	254	244	1¼″	7.3	7

■ PRESSURE DIVISION (Forged steel)

(MPa)

Code No.	Size 15mm	Size 20mm	Size 25mm	Size 32mm
1	0.035~0.15	0.035~0.1	0.035~0.2	0.035~0.1
2	Over 0.15~0.4	Over 0.1~0.25	Over 0.2~0.3	Over 0.1~0.2
3	Over 0.4~0.8	Over 0.25~0.5	Over 0.3~0.7	Over 0.2~0.4
4	Over 0.8~1.5	Over 0.5~1.0	Over 0.7~1.5	Over 0.4~0.7
5	Over 1.5~2.5	Over 1.0~1.5	Over 1.5~2.0	Over 0.7~1.0
6	Over 2.5~3.0	Over 1.5~3.0	Over 2.0~3.0	Over 1.0~1.5
7				Over 1.5~2.0
8				Over 2.0~2.5
9				Over 2.5~3.0

■ PRESSURE DIVISION (Stainless steel)

(MPa)

Code No.	Size 15mm	Size 20mm	Size 25mm	Size 32mm
1	0.035~0.15	0.035~0.1	0.035~0.2	0.035~0.1
2	Over 0.15~0.4	Over 0.1~0.25	Over 0.2~0.3	Over 0.1~0.2
3	Over 0.4~0.8	Over 0.25~0.5	Over 0.3~0.7	Over 0.2~0.4
4	Over 0.8~1.5	Over 0.5~1.0	Over 0.7~1.5	Over 0.4~0.7
5	Over 1.5~2.5	Over 1.0~1.5	Over 1.5~2.0	Over 0.7~1.0
6	Over 2.5~3.0	Over 1.5~3.0	Over 2.0~3.0	Over 1.0~1.5
7				Over 1.5~2.0
8				Over 2.0~3.0

SL-9, 10 Type Safety Valve (Lift Type)



SL-9 Type



SL-10 Type

■ CONSTRUCTION

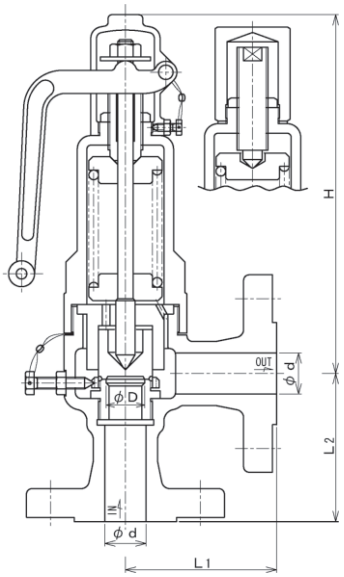

Depending on models, the structure may be different from what is shown in the above figure.

■ SPECIFICATIONS

Model name		SL-9		SL-10	
Code name		SL9-N □	SL9-D □	SL10-N □	SL10-D □
		※ Code No. of pressure division is required in □.			
Cap type		With lever		Without lever	
Applicable fluid		Steam & air		Steam, air, gases & liquids	
Fluid temperature		−5~235℃*1.	−5~235℃*2.	−5~235℃*1.	−5~150℃*2.
Set pressure range		0.035~2.0MPa*3.			
End connection		Flanged JIS 10, 20, 30KRF*4.			
Materials	Body	Forged steel	Stainless steel	Forged steel	Stainless steel
	Disc	Stainless steel*5.			
	Seat ring	Stainless steel*5.			
Valve body pressure test		2 times of flange rated pressure. (Hydraulic)			

∗1. Please contact our local agent in case of fluid temperature Max. 350°C.
∗2. Please contact our local agent in case of fluid temperature Max. 300°C.
∗3. Set pressure Max. 3.0MPa is available upon your request.
∗4. Flanged JIS 5K FF-RF, ASME (ANSI) Class 150, 300 are also available upon your request.
∗5. For those exceeding 2.0MPa as the pressure division, the stellited deposition (welding) shall be executed on the disc and the seat ring.

■ DIMENSIONS

(mm)

Size d	Seat opening dia. D	Effective area (mm^2) $\pi D\ell$	Lift ℓ	Face to Face		Height H		Mass(kg)	
				L_1	L_2	SL-9 Type	SL-10 Type	SL-9 Type	SL-10 Type
15(½″)	15	18.8	0.4	86	86	207	192	4	3.8
20(¾″)	20	31.4	0.5	88	88	207	192	4.4	4.2
25(1″)	25	54.9	0.7	96	96	254	244	9	8.7
32(1¼″)	32	80.3	0.8	102	102	254	244	9.8	9.5

Flange code JIS 20K

■ PRESSURE DIVISION (Body: Forged steel)

(MPa)

Code No.	Size 15mm	Size 20mm	Size 25mm	Size 32mm
1	0.035~0.15	0.035~0.1	0.035~0.2	0.035~0.1
2	Over 0.15~0.4	Over 0.1~0.25	Over 0.2~0.3	Over 0.1~0.2
3	Over 0.4~0.8	Over 0.25~0.5	Over 0.3~0.7	Over 0.2~0.4
4	Over 0.8~1.5	Over 0.5~1.0	Over 0.7~1.5	Over 0.4~0.7
5	Over 1.5~2.5	Over 1.0~1.5	Over 1.5~2.0	Over 0.7~1.0
6	Over 2.5~3.0	Over 1.5~3.0	Over 2.0~3.0	Over 1.0~1.5
7				Over 1.5~2.0
8				Over 2.0~2.5
9				Over 2.5~3.0

■ PRESSURE DIVISION (Body: Stainless steel)

(MPa)

Code No.	Size 15mm	Size 20mm	Size 25mm	Size 32mm
1	0.035~0.15	0.035~0.1	0.035~0.2	0.035~0.1
2	Over 0.15~0.4	Over 0.1~0.25	Over 0.2~0.3	Over 0.1~0.2
3	Over 0.4~0.8	Over 0.25~0.5	Over 0.3~0.7	Over 0.2~0.4
4	Over 0.8~1.5	Over 0.5~1.0	Over 0.7~1.5	Over 0.4~0.7
5	Over 1.5~2.5	Over 1.0~1.5	Over 1.5~2.0	Over 0.7~1.0
6	Over 2.5~3.0	Over 1.5~3.0	Over 2.0~3.0	Over 1.0~1.5
7				Over 1.5~2.0
8				Over 2.0~3.0

SL-11, 12 Type Safety Valve (Lift Type)

for Pressure Vessels, Steam Boilers, etc.



SL-11 Type



SL-12 Type

■ SPECIFICATIONS

Model name	SL-11	SL-12
Code name	SL11-C ☐	SL12-C ☐
	※ Code No. of pressure division is required in ☐.	
Cap type	With lever	Without lever
Applicable fluid	Steam & air	Steam, air, gases & liquids
Size	15~150(½″~6″)	
Fluid temperature	−5~235℃	
Set pressure range	Size 15~25mm:0.035~3.0MPa Size 40~100mm:2.0~3.0MPa*1. Size 125~150mm:0.035~3.0MPa	
End connection	Flanged JIS 10, 16, 20, 30KRF*2.	
Materials	Body (Cast steel)*3, Disc & Seat ring(Stainless steel)	
	Disc & Seat ring (Stellite deposition)	
Valve body pressure test	2 times of flange rated pressure. (Hydraulic)	

*1. For size 40~100mm products and set pressure less than 2.0 MPa, please contact our agent in your area.
*2. ASME (ANSI) Class 150 and 300 flanges (excluding size 15mm) are also available.
*3. Product with stainless steel main body is available. (Depending on size, applicable pressure may vary.)

■ DIMENSIONS

(mm)

Size d	Seat opening dia. D	Effective area (mm²) π Dℓ	Lift ℓ	Face to Face		Height H		Mass(kg)	
				L_1	L_2	SL-11 Type	SL-12 Type	SL-11 Type	SL-12 Type
15(½″)	15	18.8	0.4	85	80	195	197	6.6	6.4
20(¾″)	20	31.4	0.5	90	90	199	201	8.2	8
25(1″)	25	54.9	0.7	95	100	251	253	12	11
40(1½″)	40	125.6	1.0	130	105	304	303	22	21
50(2″)	50	204.1	1.3	135	110	368	364	31	29
65(2½″)	65	346.9	1.7	155	135	431	427	48	47
75*(3″)	75	447.4	1.9	170	140	474	470	70	69
100(4″)	100	785.0	2.5	210	165	670	664	139	137
125(5″)	125	1256.0	3.2	235	190	760	755	193	190
150(6″)	150	1789.8	3.8	265	215	863	858	280	277

*The end connection Flange of 75mm is the same as JIS Flange code of 80mm. Flange code JIS 30K

■ CONSTRUCTION

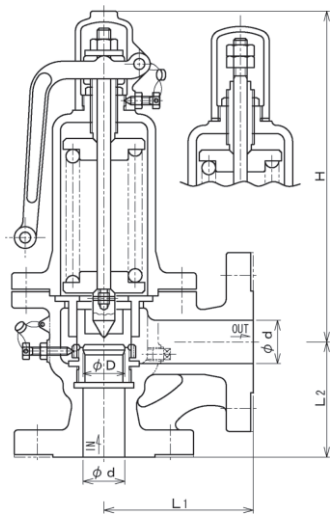

Depending on nominal diameter, the structure of the valve may be different from what is shown in the drawing.

■ PRESSURE DIVISION

(MPa)

Code No.	Size 15~25mm	Size 40~100mm	Size 125~150mm
1	0.035~0.07	2.0~2.5	0.035~0.07
2	Over 0.07~0.12	Over 2.5~3.0	Over 0.07~0.1
3	Over 0.12~0.2		Over 0.1~0.35
4	Over 0.2~0.3		Over 0.35~0.5
5	Over 0.3~0.5		Over 0.5~0.7
6	Over 0.5~0.8		Over 0.7~0.85
7	Over 0.8~1.3		Over 0.85~1.0
8	Over 1.3~2.0		Over 1.0~1.3
9	Over 2.0~3.0		Over 1.3~1.6
A			Over 1.6~2.0
B			Over 2.0~2.5
C			Over 2.5~3.0

E Type Series Relief Valve (for Pump Relief)

for Pump Only

E Type series pump relief valves are specially designed for pump. Their construction prevent hunting or water hammer even in the case of continuous relief.



SL-38E Type



SL-40E Type



SL-40EF Type

THE DASH-POT PART CONSTRUCTION

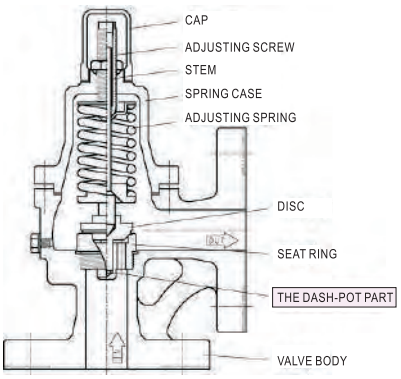

【 DASH-POT TYPE 】

FEATURES

- The dash-pot structure of the disc can inhibit drastic movement of the disc caused by pulsating pressure or fluctuating of pressure.
- It maintains the discharge pressure of pump constantly to relieve increased by change of load of the pump.

SCREWED TYPE

SPECIFICATIONS

Model name		SL-38E		SL-40E	
Code name		**SL38E-D ☐**		**SL40E-D ☐**	
		※ Code No. of pressure division is required in ☐.(Refer to Page 76)			
Cap type		Without lever			
Applicable fluid		Water, oil & liquids*1.			
Fluid temperature		5~80℃(Available up to 150℃ upon request*2.)			
Size		15~50(½″~2″)	15~25(½″~1″)	15~50(½″~2″)	15~25(½″~1″)
Set pressure range		**0.035~1.0MPa**	**1.0~1.6MPa**	**0.035~1.0MPa**	**1.0~1.6MPa**
End connection		Screwed JIS Rc			
Materials	Body	Stainless steel(Spring case:Cast bronze)		Stainless steel(Spring case:Stainless steel)	
	Disc & seat ring	Stainless steel			
Valve body pressure test		2 times of rated pressure. (Hydraulic)			

*1. Please contact our agent in your area if the applicable fluid is gasoline, kerosene, or solvents.
*2. The temperature should be Max.150°C for oil and Max.90°C for hot water.

FLANGE TYPE

SPECIFICATIONS

Model name		SL-40EF
Code name		**SL40EF-D☐**
		※ Code No. of pressure division is required in ☐. (Refer to Page 76)
Cap type		Without lever
Applicable fluid		Water, oil & liquids*1.
Fluid temperature		5~80℃(Available up to 150℃ upon request *2.)
Size		15~50(½″~2″)
Set pressure range		**0.035~1.0MPa**
End connection		Flanged JIS 10K(Loose type)
Materials	Body	Stainless steel(Spring case: Stainless steel)
	Disc & seat ring	Stainless steel
Valve body pressure test		2 times of rated pressure. (Hydraulic)

*1. Please contact our agent in your area if the applicable fluid is gasoline, kerosene, or solvents.
*2. The temperature should be Max.150°C for oil and Max.90°C for hot water.

DIMENSIONS

●SL-38E, 40E TYPE (Screwed Type) (mm)

Size	d	L_1	L_2	H	Mass(kg)
15(½″)	½″	30	36	84(85)	0.5
20(¾″)	¾″	35	40	89(89)	0.6
25(1″)	1″	40	46	92(93)	0.8
32(1¼″)	1¼″	50	54	114(115)	1.4
40(1½″)	1½″	55	60	120(120)	1.9
50(2″)	2″	65	73	151(152)	3.4

* Figures in ( ) are for SL-40E Type.

●SL-40EF TYPE (Flange Type) (mm)

Size	L_1	L_2	H	f	Mass(kg)
15(½″)	90	110	85	5	2.1
20(¾″)	95	115	89	5	2.5
25(1″)	100	124	93	5	4
32(1¼″)	110	138	115	5	5.5
40(1½″)	125	154	120	5	6.5
50(2″)	135	164	152	5	9

Flange code JIS 10K

CONSTRUCTION

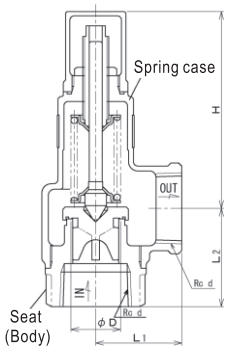

SL-38E Type

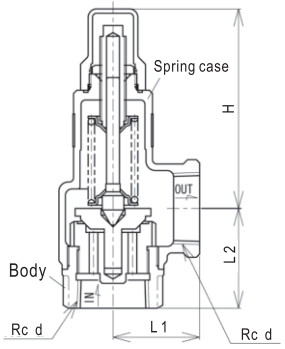

SL-40E Type

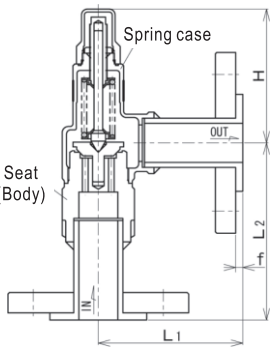

SL-40EF Type

E Type Series Relief Valve (for Pump Relief)

for Pump Only

E Type series pump relief valves are specially designed for pump. Their construction may help to prevent hunting or water hammer, even in the case of continuous relief.



SL-44E Type



SL-24E Type

THE DASH-POT PART CONSTRUCTION

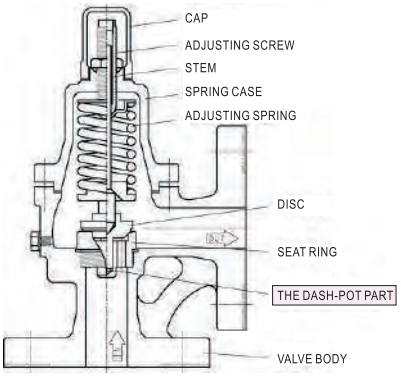

【 DASH-POT TYPE 】

FEATURES

- The dash-pot structure of the disc can inhibit drastic movement of the disc caused by fluctuating pressure or changing pressure.
- It maintains the discharge pressure of pump constantly to relieve the increased pressure caused by change of load of pump.

SPECIFICATIONS

SL-44E Type

Model name		SL-44E
Code name		**SL44E-G☐**
		※ Code No. of pressure division is required in ☐.(Refer to Page 76)
Applicable fluid		Water, oil & liquids*
Size		15~50(½″~2″)
Fluid temperature		5~80℃
Set pressure range		**0.035~1.0MPa**
End connection		Flanged JIS 10KFF
Materials	Body	Cast iron
	Trim	Stainless steel
Valve body pressure test		Hydraulic 1.5MPa

* Please contact our agent in your area If the applicable fluid is fasoline, kerosene, or solvents.

SPECIFICATIONS

SL-24E Type

Model name		SL-24E	
Code name		**SL24E-B☐**	**SL24E-G☐**
		※ Code No. of pressure division is required in ☐. (Refer to Page 76)	
Applicable fluid		Water, oil & liquids	
Size		65·80(2½″·3″)	
Fluid temperature		5~80℃(Available up to 150℃ upon request *)	
Set pressure range		**0.035~1.0MPa**	
End connection		Flanged JIS 10KFF	
Materials	Body	Cast iron	
	Trim	**Brass**	**Stainless steel**
Valve body pressure test		1.5 times of rated pressure.(Hydraulic)	

* The temperature should be less than 150°C for oil and less than 90°C for hot water.

DIMENSIONS

(mm)

Size	L_1	L_2	H	Mass(kg)
15(½″)	70	70	89	2.5
20(¾″)	75	75	94	3
25(1″)	85	85	98	4.5
32(1 ¼″)	95	90	122	6.1
40(1 ½″)	100	95	128	7.8
50(2″)	110	105	158	11.7
65(2 ½″)	135	115	291	22
80(3″)	145	125	371	30

Flange code JIS 10KFF

CONSTRUCTION

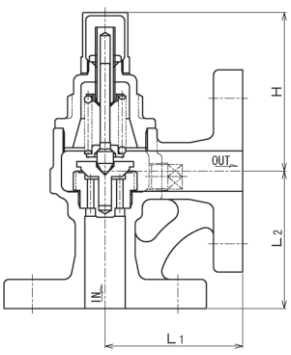

SL-44E Type

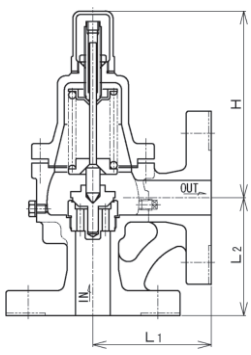

SL-24E Type

ED Type Series Relief Valve(for Pump Relief)

for Pump, Thermal Relief etc. 【 DAMPER TYPE 】

ED Type series pump relief valves are pressure regulating relief valves specially designed for pumps. With damper mechanism, they can perform pressure detection reliably, and therefore can also be used with displacement pumps such as plunger pump. Also, since these valves have a structure that can balance back pressure, they can not be affected by back pressure and are ideal products for thermal relief.



SL-8ED Type



SL-10ED Type

DAMPER CONSTRUCTION

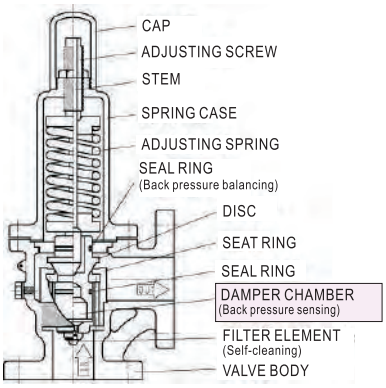

FEATURES

- Damper component ensures that valve disc remains steady even when pressure is high and changes rapidly.
- Back pressure balancing structure makes the valve free from influence of back pressure that may occur due to outlet piping of relief valve.

Max. 3.0MPa

SPECIFICATIONS

Model name		SL-8ED		SL-10ED	
Code name		SL8ED-N☐	SL8ED-D☐	SL10ED-N☐	SL10ED-D☐
		※ Code No. of pressure division is required in ☐.(Refer to Page 76)			
Applicable fluid		Water, oil & liquids			
Size		15~32 (½″~1¼″)			
Fluid temperature		5~80℃(Available up to 150℃ upon request *1)			
Set pressure range		0.035~3.0MPa			
Maximum allowed back pressure		1.0MPa			
End connection		Screwed JIS Rc		Flanged JIS 20KRF*2.	
Materials	Body	Forged steel	Stainless steel	Forged steel	Stainless steel
	Trim	Stainless steel			
Valve body pressure test		2 times of rated pressure. (Hydraulic)			

*1. The temperature should be Max.150°C for oil and Max.90°C for hot water.
*2. Flanged JIS 10, 16 and 30K are available upon your request.

DIMENSIONS

●SL-8ED TYPE (Screwed Type) (mm)

Size	d	L1	L2	H	Mass(kg)
15(½″)	½″	50	45	192	2.4
20(¾″)	¾″	50	45	192	2.4
25(1″)	1″	70	55	244	6.2
32(1¼″)	1¼″	70	55	244	7

●SL-10ED TYPE (Flange Type) (mm)

Size	L1	L2	H	Mass(kg)
15(½″)	86	86	192	4
20(¾″)	88	88	192	4.2
25(1″)	96	96	244	8.7
32(1¼″)	102	102	244	11

Flange code JIS 20KRF

CONSTRUCTION

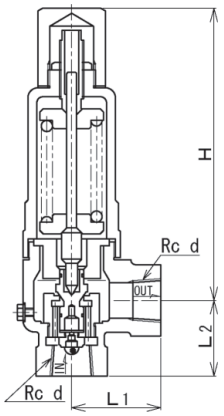

SL-8ED Type

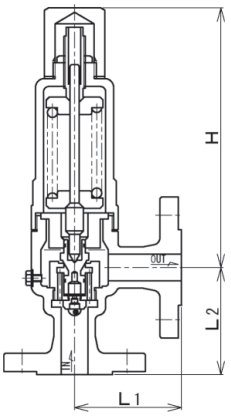

SL-10ED Type

ED Type Series Relief Valve (for Pump Relief)

for Pump, Thermal Relief etc. 【 DAMPER TYPE 】

ED Type series pump relief valves are pressure regulating relief valves specially designed for pumps. With damper mechanism, they can perform pressure detection reliably, and therefore can also be used with displacement pumps such as plunger pump. Also, since these valves have a structure that can balance back pressure, they can not be affected by back pressure and are ideal products for thermal relief.



SL-46ED Type

FEATURES

- Damper component ensures that valve disc remains steady even when pressure is high and changes rapidly.
- Back pressure balancing structure makes the valve free from influence of back pressure that may occur due to outlet piping of relief valve.

Max. 2.0MPa

SPECIFICATIONS

Model name		SL-46ED	SL-6ED
Code name		SL46ED-M☐	SL6ED-C☐
		※ Code No. of pressure division is required in ☐.(Refer to Page 76)	
Applicable fluid		Water, oil & liquids	
Size		40~75(1½″~3″)	
Fluid temperature		5~80℃(Available up to 150℃ upon request *1.)	
Set pressure range		0.035~2.0MPa	
Maximum allowed back pressure		1.0MPa	
End connection		Flanged JIS 20KFF*2.	
Materials	Body	Ductile cast iron	Cast steel*3.
	Trim	Stainless steel	
Valve body pressure test		1.5 times of rated pressure (Hydraulic)	2 times of rated pressure (Hydraulic)

*1. The temperature shoule be Max.150°C for oil and Max.90°C for hot water.
*2. Flanged JIS 10, 16K are available upon your request.
*3. Products with stainless steel main body are available.

DIMENSIONS

(mm)

Size	L_1	L_2	H	Mass(kg)
40(1½″)	110	100	251	13.3
50(2″)	120	110	296	22.5
65(2½″)	130	120	365	27.1
75(3″)※	145	135	403	36.6

Note: The weight data is for SL-6ED (with cast steel main body).
※ The nominal diameter of flange is that of JIS flange (80mm).

Flange code JIS 20KFF

CONSTRUCTION

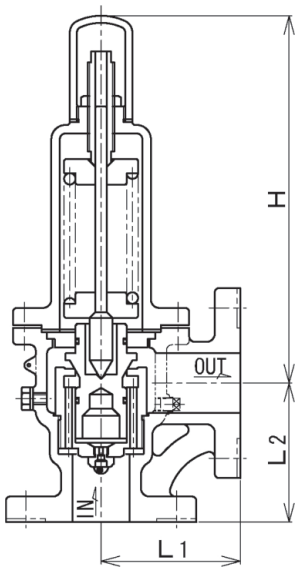

DAMPER CONSTRUCTION

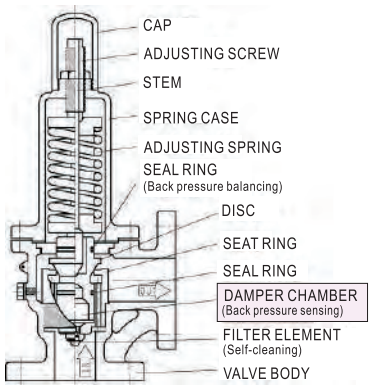

PRESSURE DIVISION TABLE

●E TYPE SERIES RELIEF VALVE

【DASH POT TYPE】 for PUMP

SL-38E, 40E TYPES (Screwed Type)

(MPa)

Code No.	SL38E-D □, SL40E-D □
1	0.035~0.2
2	Over 0.2~0.5
3	Over 0.5~1.0
4	Over 1.0~1.6

＊Code No. of pressure division is required in □.

SL-40EF TYPE (Flange Type)

(MPa)

Code No.	SL40EF-D □
1	0.035~0.2
2	Over 0.2~0.5
3	Over 0.5~1.0

＊Code No. of pressure division is required in □.

SL-44E TYPE (Flange Type)

(MPa)

Code No.	SL44E-G□
	Size 15~50mm
1	0.035~0.2
2	Over 0.2~0.5
3	Over 0.5~1.0

＊Code No. of pressure division is required in □.

SL-24E TYPE (Flange Type)

(MPa)

Code No.	SL24E-B□, SL24E-G□	
	Size 65mm	Size 80mm
1	0.035~0.2	0.035~0.2
2	Over 0.2~0.7	Over 0.2~0.5
3	Over 0.7~1.0	Over 0.5~0.8
4		Over 0.8~1.0

＊Code No. of pressure division is required in □.

●ED TYPE SERIES RELIEF VALVE

【DAMPER TYPE】 for PUMP AND THERMAL RELIEF PURPOSE

SL-8ED TYPE (Screwed Type)
SL-10ED TYPE (Flange Type) (Max. 3.0MPa)

■FORGED STEEL

(MPa)

Code No.	SL8ED-N □, SL10ED-N □		
	Size 15~20mm	Size 25mm	Size 32mm
1	0.035~0.15	0.035~0.3	0.035~0.15
2	Over 0.15~0.4	Over 0.3~0.5	Over 0.15~0.3
3	Over 0.4~0.8	Over 0.5~1.0	Over 0.3~0.6
4	Over 0.8~1.5	Over 1.0~2.0	Over 0.6~1.1
5	Over 1.5~2.5	Over 2.0~3.0	Over 1.1~1.6
6	Over 2.5~3.0		Over 1.6~2.4
7			Over 2.4~3.0

＊Code No. of pressure division is required in □.

■STAINLESS STEEL

(MPa)

Code No.	SL8ED-D □, SL10ED-D □		
	Size 15~20mm	Size 25mm	Size 32mm
1	0.035~0.15	0.035~0.3	0.035~0.15
2	Over 0.15~0.4	Over 0.3~0.45	Over 0.15~0.3
3	Over 0.4~0.8	Over 0.45~1.0	Over 0.3~0.6
4	Over 0.8~1.5	Over 1.0~2.0	Over 0.6~1.0
5	Over 1.5~2.5	Over 2.0~3.0	Over 1.0~1.5
6	Over 2.5~3.0		Over 1.5~2.0
7			Over 2.0~3.0

＊Code No. of pressure division is required in □.

SL-46ED TYPE (Flange Type)
SL-6ED TYPE (Flange Type) (Max. 2.0MPa)

(MPa)

Code No.	SL46ED-M□, SL6ED-C□
1	0.035~0.1
2	Over 0.1~0.2
3	Over 0.2~0.4
4	Over 0.4~0.6
5	Over 0.6~0.85
6	Over 0.85~1.5
7	Over 1.5~2.0

＊Code No. of pressure division is required in □.

DATA/E, ED Type Series Relief Valve (for Pump Relief)

Fig 1. FLOW CHARACTERISTICS CHART

Applicable models:

SL-38E, SL-40E, SL-40EF
SL-24E, SL-44E
SL-6ED, SL-8ED
SL-10ED,SL-46ED

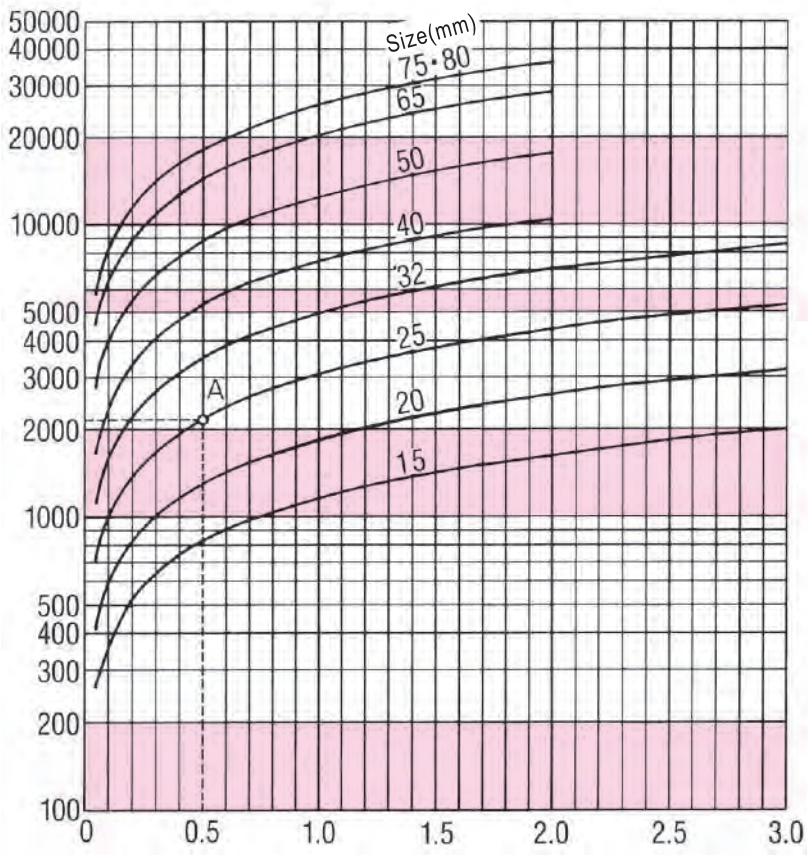

Fig 2. APPROXIMATE FLOW RATE

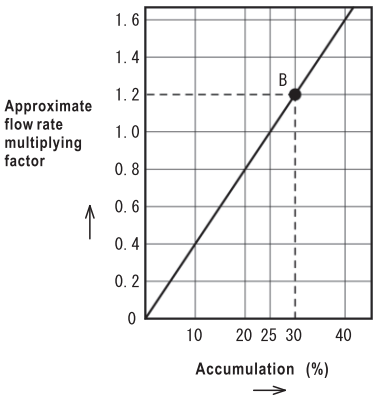

■ PIPING EXAMPLE

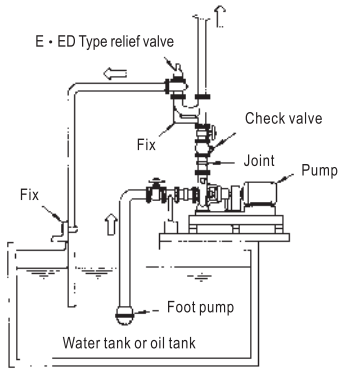

● HOW TO USE THE CHART

1. Use Fig.1 when accumulation is 25%.
2. Use Fig.1 and Fig.2 when accumulation is not 25%.

● EXAMPLE

1. Conditions: size 25mm, relieving pressure 0.5MPa, accumulation 25%. From point A (the point where 0.5MPa relieving pressure line intersects with size 25mm curve) in Fig.1, the flow will be 2,180kg/h.
2. When accumulation is 30% and other conditions are the same as above, since the approximate flow rate multiplying factor is 1.2, which can be acquired using point B in Fig.2, the flow will be 2,180kg×1.2=2,616kg/h.

● kg/h→L/min conversion (for reference only)

Since the weight of 1L water is about 1kg

$$L/min = \frac{\text{value in the above chart (kg/h=L/h)}}{60}$$

SF-1H, 2H Type Safety Valve (Full Bore Type)

for Pressure Vessels, Steam Boiler, etc. (2.0MPa)



SF-1H Type



SF-2H Type

SPECIFICATIONS

Model name	SF-1H	SF-2H
Code name	SF1H-M ☐	SF2H-M ☐
	※ Code No. of pressure division is required in ☐.	
Cap type	With lever	Without lever
Applicable fluid	Steam & air	
Fluid temperature	−5~220℃	
Set pressure range	0.1~2.0MPa	
End connection	Inlet:Screwed JIS R, outlet:Screwed JIS Rc	
Materials	Body(Ductile cast iron), Disc(Stainless steel), Seat ring(Stainless steel stellited)	
Valve body pressure test	Set pressure 0.1MPa~1.0MPa: Hydraulic 1.5MPa Set pressure 1.0MPa~2.0MPa: Hydraulic 3.0MPa	

* Size (di) and thread size of end connection are different. Thread size of end connection has to be one size bigger.

DIMENSIONS

(mm)

Size	End connection		Seat opening dia.	Throat dia.	Throat area	Lift	Face to Face		Height H		Mass(kg)	
di	A	B	D	dt	a(mm²)	ℓ	L_1	L_2	SF-1H Type	SF-2H Type	SF-1H Type	SF-2H Type
20(¾″)	1″	1″	18	15	176.6	3.8	50	75	207	198	3.3	3.2
25(1″)	1¼″	1¼″	22	19	283.3	5.0	60	85	232	228	5.2	5
40(1½″)	2″	2″	35	30	706.5	7.5	70	100	300	297	9.6	9.2
50(2″)	2½″	2½″	45	38	1133.5	9.5	85	115	329	326	16	16

CONSTRUCTION

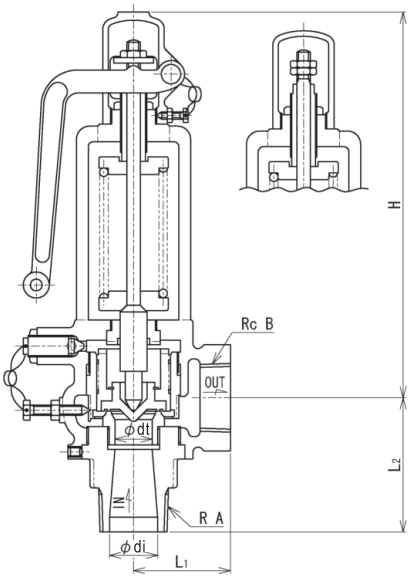

Note:
Size (di) and thread size of end connection are different.
The thread size of end connection has to be one size bigger.

PRESSURE DIVISION

(MPa)

Code No.	Pressure division
1	0.1~0.12
2	Over 0.12~0.2
3	Over 0.2~0.3
4	Over 0.3~0.5
5	Over 0.5~0.75
6	Over 0.75~1.0
7	Over 1.0~1.3
8	Over 1.3~1.6
9	Over 1.6~2.0

SF-13, 13L, 14, 14L Type Safety Valve (Full Bore Type)

for Pressure Container, Steam Boiler, etc. (1.0MPa)



SF-13 Type



SF-14 Type

PRESSURE DIVISION (MPa)

Code No.	Pressure division
1	0.1
2	Over 0.1~0.12
3	Over 0.12~0.15
4	Over 0.15~0.18
5	Over 0.18~0.21
6	Over 0.21~0.25
7	Over 0.25~0.3
8	Over 0.3~0.36
9	Over 0.36~0.43
A	Over 0.43~0.5
B	Over 0.5~0.65
C	Over 0.65~0.8
D	Over 0.8~1.0

SPECIFICATIONS

Model name	SF-13	SF -13L	SF-14	SF-14L
Code name	SF13-G☐	SF13L-G☐	SF14-G☐	SF14L-G☐
	※ Code No. of pressure division is required in ☐.			
Cap type	With lever		Without lever	
Applicable fluid	Air	Steam	Air, gases & liquids	Steam
Size	25~150(1″~6″)			
Fluid temperature	−5~220℃		−5~184℃*1.	
Set pressure range	0.1~1.0MPa			
End connection	Inlet:Flanged JIS10KFF (Thickness is based on table of DIMENSIONS)*2. Outlet:Flanged JIS10KFF			
Materials	Body(Cast iron), Disc & Seat ring(Stainless steel*3.)			
Valve body pressure test	Hydraulic 1.5MPa			

*1. Applicable temperature Max. 220℃ is available upon your request.
*2. Flange codes JIS B8210 for inlet is also available upon your request.
*3. The valve for steam has split valve disc.

DIMENSIONS (mm)

Size Inlet×Throat dia.×Outlet	Seat opening dia.	Throat dia.	Throat area	Lift	Face to Face		Height H		Thickness of flange	Mass(kg)	
							SF-13 SF-13L Type	SF-14 SF-14L Type		SF-13 SF-13L Type	SF-14 SF-14L Type
di×dt×do	D	dt	a(mm²)	ℓ	L1	L2			t		
25(1″)×19×40(1½″)	22	19	283.3	5.0	105	95	226	227	22	11	11
40(1½″)×25/30×65(2½″)	35	25	490.6	6.5	125	120	290	291	24	20	19
		30	706.5	7.5							
50(2″)×34/38×80(3″)	45	34	907.4	8.5	135	125	341	342	26	26	26
		38	1133.5	9.5							
65(2½″)×43/49×100(4″)	58	43	1451.4	11.0	155	140	396	397	28	41	40
		49	1884.7	12.5							
80(3″)×55/61×125(5″)	71	55	2374.6	14.0	175	160	480	481	30	61	58
		61	2920.9	15.5							
100(4″)×69/76×150(6″)	88	69	3737.3	17.5	205	180	553	554	32	91	91
		76	4534.1	19.0							
125(5″)×86/95×200(8″)	111	86	5805.8	21.5	225	210	686	687	34	147	145
		95	7084.6	24.0							
150(6″)×105/115×200(8″)	134	105	8654.6	26.5	255	220	813	815	36	226	220
		115	10381.6	29.0							

Flange code JIS 10K

CONSTRUCTION

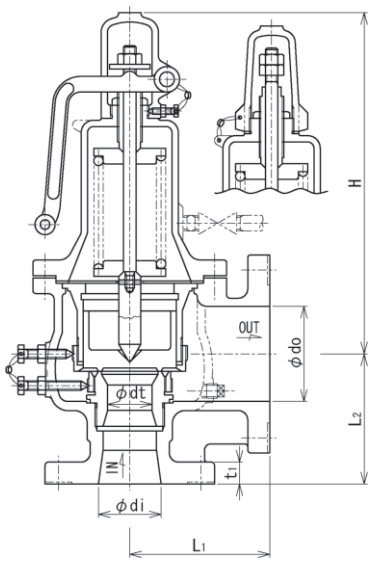

Depending on nominal diameter, the structure of the valve may be different from what is shown in the drawing.

● CONSTRUCTION OF SF-13L, 14L VALVE PART

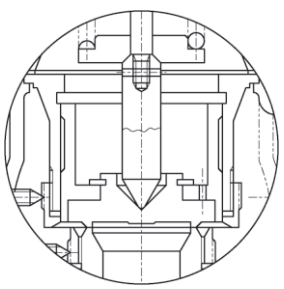

SF-15, 15L, 16, 16L Type Safety Valve (Full Bore Type)

for Pressure Vessels, Steam Boiler, etc. (1.0MPa)



SF-15 Type



SF-16 Type

■ PRESSURE DIVISION (MPa)

Code No.	Pressure division
1	0.1
2	Over 0.1~0.12
3	Over 0.12~0.15
4	Over 0.15~0.18
5	Over 0.18~0.21
6	Over 0.21~0.25
7	Over 0.25~0.3
8	Over 0.3~0.36
9	Over 0.36~0.43
A	Over 0.43~0.5
B	Over 0.5~0.65
C	Over 0.65~0.8
D	Over 0.8~1.0

■ SPECIFICATIONS

Model name	SF-15	SF-15L	SF-16	SF-16L
Code name	SF15-C☐	SF15L-C☐	SF16-C☐	SF16L-C☐
	※ Code No. of pressure division is required in ☐.			
Cap type	With lever		Without lever	
Applicable fluid	Air	Steam	Air, gases & liquids	Steam
Size	40~150(1½″~6″)			
Fluid temperature	−5~235℃			
Set pressure range	0.1~1.0MPa			
End connection	Inlet:Flanged JIS 10KRF(Thickness is based on table of DIMENSIONS)*1. Outlet:Flanged JIS 10KFF*1. *2.			
Materials	Body(Cast steel)*3, Disc & Seat ring(Stainless steel*4)			
Valve body pressure test	Hydraulic 2.0MPa			

*1. Flange codes JIS B8210 10K(Inlet)× JIS B2220 10K(Outlet) and ASME(ANSI) Class 150× 150 are also available upon your request.
*2. RF flange for outlet side is also available upon your request.
*3. Stainless steel body is available. (Applicable pressure is different for each size)
*4. The valve for steam has split valve disc.
*5. For size 15~25mm, please see Page 82.

■ DIMENSIONS (mm)

Size Inlet×Throat dia.×Outlet di×dt×do	Seat opening dia. D	Throat dia. dt	Throat area a(mm²)	Lift ℓ	Face to Face L1	Face to Face L2	Height H SF-15 SF-15L Type	Height H SF-16 SF-16L Type	Thickness of flange t	Thickness of flange f	Mass(kg) SF-15 SF-15L Type	Mass(kg) SF-16 SF-16L Type
40(1½″)× 25/30 ×65(2½″)	35	25	490.6	6.5	127	125	290	291	24	6	21	21
		30	706.5	7.5								
50(2″)× 34/38 ×80(3″)	45	34	907.4	8.5	136	135	341	342	26	6	27	26
		38	1133.5	9.5								
65(2½″)× 43/49 ×100(4″)	58	43	1451.4	11.0	156	160	396	397	28	8	45	44
		49	1884.7	12.5								
80(3″)× 55/61 ×125(5″)	71	55	2374.6	14.0	176	180	480	481	30	8	63	61
		61	2920.9	15.5								
100(4″)× 69/76 ×150(6″)	88	69	3737.3	17.5	206	205	553	554	32	10	97	95
		76	4534.1	19.0								
125(5″)× 86/95 ×200(8″)	111	86	5805.8	21.5	225	240	686	687	34	10	160	158
		95	7084.6	24.0								
150(6″)× 105/115 ×200(8″)	134	105	8654.6	26.5	255	250	813	815	36	12	242	236
		115	10381.6	29.0								

Flange code inlet JIS 10KRF
Outlet JIS 10K

■ CONSTRUCTION

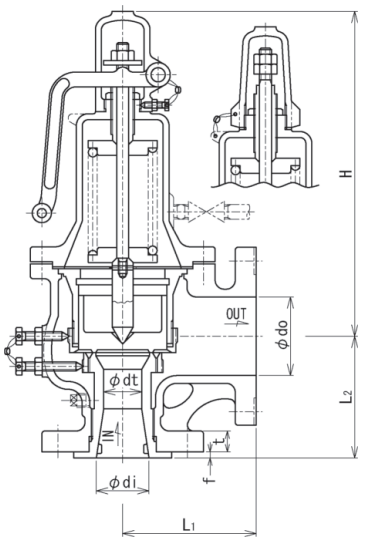

Depending on nominal diameter, the structure of the valve may be different from what is shown in the drawing.

● CONSTRUCTION OF SF-15L, 16L VALVE PART

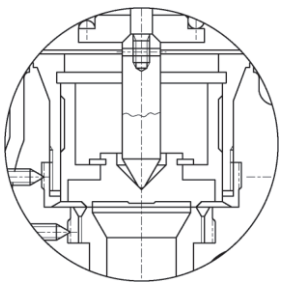

SF-17, 17L, 18, 18L Type Safety Valve (Full Bore Type)

for Pressure Vessels, Steam Boiler, etc. (2.0MPa)



SF-17 Type



SF-18 Type

PRESSURE DIVISION

(MPa)

Code No.	Pressure division
1	1.0~1.3
2	Over 1.3~1.6
3	Over 1.6~2.0

SPECIFICATIONS

Model name	SF-17	SF-17L	SF-18	SF-18L
Code name	SF17-C☐	SF17L-C☐	SF18-C☐	SF18L-C☐
	※ Code No. of pressure division is required in ☐.			
Cap type	With lever		Without lever	
Applicable fluid	Air	Steam	Air, gases & liquids	Steam
Size	40~150(1½″~6″)			
Fluid temperature	−5~235℃			
Set pressure range	1.0~2.0MPa			
End connection	Inlet:Flanged JIS 16K, 20KRF(Thickness is based on table of DIMENSIONS)*1. Outlet:Flanged JIS 10KFF*1. *2.			
Materials	Body(Cast steel)*3, Disc & Seat ring(Stainless steel)			
	Disc & Seat ring:Stellited*4.			
Valve body pressure test	2 times of flange rated pressure. (Hydraulic)			

*1. Flange codes JIS B8210 10K(inlet)×JIS B2220 10K(outlet) and ASME(ANSI) Class 150×150 are also available upon your request.
*2. RF flange for outlet side is also available upon your request.
*3. For valve main body made of stainless steel, please contact our agent in your area.
*4. The valve for steam has split valve disc and only valve seat is stellite welded.
*5. For size 15~25mm, please see Page 82.

DIMENSIONS

(mm)

Size Inlet×Throat dia.×Outlet	Seat opening dia.	Throat dia.	Throat area	Lift	Face to Face		Height H		Thickness of flange		Mass(kg)	
							SF-17 SF-17L Type	SF-18 SF-18L Type			SF-17 SF-17L Type	SF-18 SF-18L Type
di×dt×do	D	dt	a(mm²)	ℓ	L1	L2			t	f		
40(1½″)× 25/30 ×65(2½″)	35	25	490.6	6.5	127	125	290	291	24	6	22	22
		30	706.5	7.5								
50(2″)× 34/38 ×80(3″)	45	34	907.4	8.5	136	135	374	375	26	6	30	29
		38	1133.5	9.5								
65(2½″)× 43/49 ×100(4″)	58	43	1451.4	11.0	156	160	470	471	28	8	52	51
		49	1884.7	12.5								
80(3″)× 55/61 ×125(5″)	71	55	2374.6	14.0	176	180	528	529	30	8	80	79
		61	2920.9	15.5								
100(4″)× 69/76 ×150(6″)	88	69	3737.3	17.5	206	205	656	657	32	10	140	138
		76	4534.1	19.0								
125(5″)× 86/95 ×200(8″)	111	86	5805.8	21.5	225	240	809	811	34	10	197	194
		95	7084.6	24.0								
150(6″)× 105/115 ×200(8″)	134	105	8654.6	26.5	255	250	900	902	36	12	281	278
		115	10381.6	29.0								

Note: The weight is that of JIS 20K inlet flange.

Flange code inlet JIS 16,20KRF
Outlet JIS 10K

CONSTRUCTION

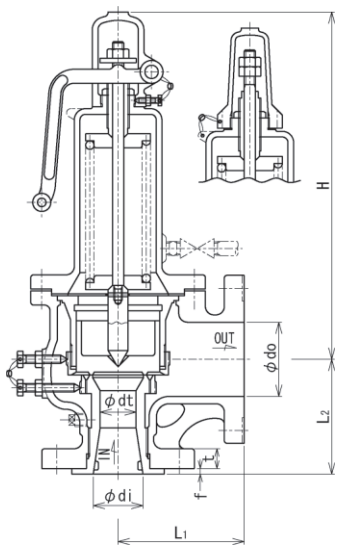

Depending on nominal diameter, the structure of the valve may be different from what is shown in the drawing.

● CONSTRUCTION OF SF-17L, 18L VALVE PART

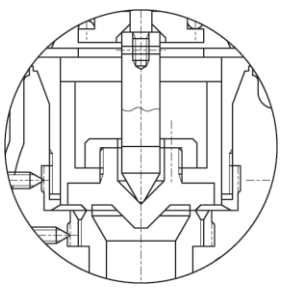

SF-19, 19L, 20, 20L Type Safety Valve (Full Bore Type)

for Pressure Vessels, Steam Boiler, etc. (3.0MPa)



SF-19 Type



SF-20 Type

PRESSURE DIVISION

(MPa)

Code No.	Size 15~25mm	Size 40~150mm
1	0.1	Over 2.0~2.5
2	Over 0.1~0.12	Over 2.5~3.0
3	Over 0.12~0.15	
4	Over 0.15~0.18	
5	Over 0.18~0.21	
6	Over 0.21~0.25	
7	Over 0.25~0.3	
8	Over 0.3~0.36	
9	Over 0.36~0.43	
A	Over 0.43~0.5	
B	Over 0.5~0.65	
C	Over 0.65~0.8	
D	Over 0.8~1.0	
E	Over 1.0~1.3	
F	Over 1.3~1.6	
G	Over 1.6~2.0	
H	Over 2.0~2.5	
J	Over 2.5~3.0	

SPECIFICATIONS

Model name	SF-19	SF-19L	SF-20	SF-20L
Code name	SF19-C ☐	SF19L-C ☐	SF20-C ☐	SF20L-C ☐
	※ Code No. of pressure division is required in ☐.			
Cap type	With lever		Without lever	
Applicable fluid	Air	Steam	Air, gases & liquids	Steam
Size	15~150(½″~6″)			
Fluid temperature	−5~235℃			
Set pressure range	Size 15~25mm:0.1~3.0MPa Size 40~150mm:2.0~3.0MPa			
End connection	Inlet:Flanged JIS (10*1), 20, 30KRF(Thickness is based on table of DIMENSIONS)*1. Outlet:Flanged JIS 10KFF*1. *2.			
Materials	Body(Cast steel)*3, Disc & Seat ring(Stainless steel)			
	Disc & Seat ring:Stellited*4.			
Valve body pressure test	2 times of flange rated pressure. (Hydraulic)			

*1. Flange codes JIS B8210 20K or 30K(inlet) × JIS B2220(outlet) are available except size 40mm.
*2. RF flange for outlet side is also available upon your request.
*3. Stainless steel body is available. (Applicable pressure is different for each size)
*4. The valve for steam has split valve disc and only valve seat is stellite welded.

DIMENSIONS

(mm)

Size Inlet×Throat dia.×Outlet di×dt×do	Seat opening dia. D	Throat dia. dt	Throat area a(mm²)	Lift ℓ	Face to Face L1	 L2	Height H SF-19 SF-19L Type	 SF-20 SF-20L Type	Thickness of flange t	 f	Mass(kg) SF-19 SF-19L Type	 SF-20 SF-20L Type
15(½″)×11×25(1″)	13	11	94.9	2.8	100	80	203	204	18	1	8.2	8
20(¾″)×15×40(1½″)	18	15	176.6	3.8	105	95	209	210	18	1	9.7	9.5
25(1″)×19×40(1½″)	22	19	283.3	5.0	115	110	257	258	20	1	13	12
40(1½″)× 25 30 ×65(2½″)	35	25	490.6	6.5	125	125	332	333	28	6	24	24
		30	706.5	7.5								
50(2″)× 34 38 ×80(3″)	45	34	907.4	8.5	135	135	376	377	30	6	34	33
		38	1133.5	9.5								
65(2½″)× 43 49 ×100(4″)	58	43	1451.4	11.0	155	160	472	473	34	8	57	56
		49	1884.7	12.5								
80(3″)× 55 61 ×125(5″)	71	55	2374.6	14.0	175	180	528	529	36	8	77	76
		61	2920.9	15.5								
100(4″)× 69 76 ×150(6″)	88	69	3737.3	17.5	205	205	658	659	40	10	131	129
		76	4534.1	19.0								
125(5″)× 86 95 ×200(8″)	111	86	5805.8	21.5	225	240	811	813	44	10	270	267
		95	7084.6	24.0								
150(6″)× 105 115 ×200(8″)	134	105	8654.6	26.5	255	250	902	904	48	12	316	310
		115	10381.6	29.0								

Note: The weight is that of JIS 30K inlet flange.

Flange code inlet JIS (10), 20, 30KRF
Outlet JIS 10K

CONSTRUCTION

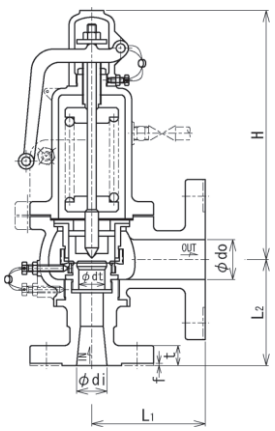

Size 15~25mm

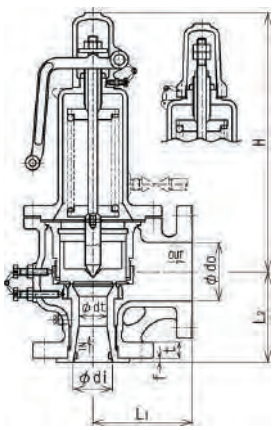

Size 40~150mm

● CONSTRUCTION OF SF-19L, 20L VALVE PART

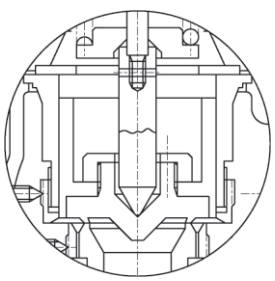

Depending on nominal diameter, the structure of the valve may be different from what is shown in the drawing.

Extract from JIS B8210-2009 Spring Safety Valve for Steam and Gases

■ Allowed deviation of discharge-starting pressure

(1) For steam

There is no provision on the relief pressure of safety valve for steam.

(2) For gases

For valve for gases, the allowed deviation of start to discharge pressure is set pressure ±5% (minimum pressure: ±0.025MPa). In case of allowed deviation, which is not allowed to exceed set pressure,add the "+" side to "−" side.

Note: For valves for gases, the set pressure is generally the start to discharge pressure.

■ Allowed deviation of opening pressure (popping pressure)

(1) For steam

See Table 1 for the deviation of opening pressure. In case of allowed deviation, which is not allowed to exceed set pressure, add the "+" side to "−" side.

(2) For gases

For safety valves for gases, the allowed deviation of discharge-starting pressure is less then1.1 times of star to discharge pressure. However, in the case of setting opening pressure, the deviation should be ±3% set pressure (minimum±0.015MPa).

In case of allowed deviation, which is not allowed to exceed set pressure, add the "+" side to "−" side.

■ BLOWDOWN

(1) For steam

See Table 2 for the blowdown pressure of safety valves for steam. For valves for steam used with through flow boilers, re-heater, and piping, which opening pressure exceeds 0.3MPa, the blowdown pressure can be less than 10% of set pressure.

(2) For gases

See Table 3 for blowdown pressure of safety valves for gases.

Note: Unless otherwise specified in JIS B8210, Blowdown Standard of VENN shall apply.

■ Restriction of material use (pressure parts of safety valve) (Source: JIS B8210-2009)

(1) For steam

Material of pressure parts	Allowed range
Cast iron	Set pressure: Max.1.6 MPa. Fluid temperature: Max.230°C
Ductile iron casting	Set pressure: Max.2.4 MPa. Fluid temperature: Max.350°C

(2) For gases

Gas type / Material of pressure parts	Toxic,flammable gases	Gases other than toxic,flammable gases	Toxic,flammable gases, other gases
	Allowed range		
Cast iron	Not allowed	Set pressure: Max.0.2 MPa	Not allowed
Ductile cast iron	Set pressure: Max.0.2 MPa	Set pressure: Max.1.6 MPa	Not allowed
Ductile iron casting	A: Application in system for highly toxic gases such as phosgene and hydrogen cyanide,etc is not allowed. B: For gases other than those mentioned in A, the set pressure should be Max.2.4 MPa. C: Fluid temperature should be higher than -5°C and lower than 350°C.		

TABLE1. TOLERANCE OF OPENING PRESSURE OF SAFETY VALVES FOR STEAM

(MPa)

Set pressure	Tolerance
Below 0.5	±0.015
0.5 or more and less than 2.3	±(3% of set pressure)
2.3 or more and less than 7.0	±0.07
7.0 or more	±(1% of set pressure)

∗1. For steam, generally the set pressure is assumed to be the opening pressure.

∗2. The tolerance of the opening pressure of the safety valves for steam used other than in boilers can be ±3% of the set pressure (minimum value ±0.015MPa).

TABLE2. BLOWDOWN PRESSURE OF SAFETY VALVES FOR STEAM

(MPa)

Set pressure	Blowdown
0.4 or less	0.03
Over 0.4	7%(4%) or less of set pressure

∗1. Generally, the blowdown pressure for steam shall be the difference between the opening pressure and the reseating pressure.

∗2. The figures in ( ) can be determinated in accordance with the agreement between the parties concerned.

TABLE3. BLOWDOWN PRESSURE OF SAFETY VALVES FOR GASES

(MPa)

Set pressure	Blowdown	
	Metal seat type	Soft seat type
0.2 or less	0.03 or less	0.05 or less
Over 0.2	15% or less of set pressure	25% or less of set pressure

∗1. Generally, the blowdown pressure for gases shall be the difference between the start to discharge pressure and the reseating pressure.
However, when set by the opening pressure, it shall be the difference between the opening pressure and the reseating pressure.

∗2. The definition of the soft seated and metal seated types shall be in accordance with JIS B0100.

Note. Unless otherwise specified in JIS B8210, Blowdown Standard of VENN shall apply.

Applicable Laws & Regulations and Formulas for Calculating Relieving Capacity

Coefficients assigned to equations may be those specified in applicable laws/regulations or in-house data(※).

※In-house data

1. PRESSURE VESSEL CONSTRUCTION CODE (from JIS B8210-2009)

(1) For Steam

$Qm=5.25C'K_{dr}'AP$

Qm: Relieving capacity (kg/h)

A : Seat opening area (mm^2)

Lift type: $A=\pi D\ell$

Full bore type: $A=\frac{\pi d^2}{4}$

D: Seat opening diameter (mm)

ℓ: Lift (mm)

d: Throat diameter (mm)

P: Absolute relieving pressure (MPa·A)

(Select the larger one of set pressure × 1.1 + 0.101 or set pressure + 0.020 + 0.101).

C': Coefficient determined according to the property of steam (See Tab.1 in Page 87.)

For saturated steam, see the following table:

Absolute relieving pressure (MPa·A)	C': Coefficient determined according the property of steam
Max.0.5	1※
over 0.5~1.0	0.98※
over 1.0~2.0	0.97※
over 2.0	0.96※

For superheated steam, See Tab1. in Page 87.

K_{dr}': Relieving coefficient

Lift type:0.864※

Full bore type:0.777

(2) For Gases

$Qm=C''K_{dr}'P_1AK_b\sqrt{\frac{M}{ZT}}$

Qm: Relieving capacity (kg/h)

A : Seat opening area (mm^2)

Lift type: $A=\pi D\ell$

Full bore type: $A=\frac{\pi d^2}{4}$

D: Seat opening diameter (mm)

ℓ: Lift (mm)

d: Throat diameter (mm)

Z: Compression coefficient: 1※ (See Fig.1 in Page 90)

T: Absolute temperature (K) of gases at relieving pressure

P_1: Relieving pressure (MPa·A)

(Select the larger one of set pressure × 1.1 + 0.101 or set pressure + 0.020 + 0.101.)

P_2: Back pressure (MPa·A)

C'': Coefficient determined according to κ (See Tab.5 in Page 88)

κ : Adiabatic exponent (Isentropic, See Tab.4 in Page 88).

The value will be 1.001 if it is not specified, in which case C''=23.95

K_{dr}': Relieving coefficient

Lift type:0.864※

Full bore type:0.777

K_b: Back pressure compensation coefficient (Depending on P_2/P_1 and κ . See Tab.6 in Page 89)

M: Molecular weight of gas (See Tab.4 in Page 88)

■ Calculating maximum flow-in gas using the following formula:

$G=0.0028\,\upsilon\rho d^2$

G: Flow in gas (kg/h)

υ : Velocity of gas (m/sec)

(More than 20 for saturated steam, or more than 30 for super-heated steam, or more than 10 for common gas)

ρ : Density of gas (kg/m^3)

d : Internal diameter of pipe (mm)

(3) For water/hot water (also applicable for hot water with temperature higher than 120°C)

(1) In case of searching from relieving capacity:

$$S=\frac{W}{87.7\sqrt{(P_1+0.1)\,\kappa\,\gamma_1}}$$

(2) In case of searching from thermal input of pressure vessel or thermal output of hot water boiler:

$$S=\frac{Q\varepsilon}{87.7C\sqrt{(P_1+0.1)\,\kappa\,\gamma_1}}$$

(If $(P_1+0.1)^\kappa > (P_1-P_2)$ in formula (1) and (2), replace (P_1-P_2) with $(P_1+0.1)^\kappa$)

S : Seat opening area (mm^2)

W: Relieving capacity of valve (kg/h)

P_1: Relieving pressure (MPa) (See Note)

Lift type: set pressure ×1.1

For SL-37~40, 43,44 type,see Page 65.

Full bore type: select the larger one of set pressure×1.15 or set pressure +0.034

Relief valve (type E・ED): select the larger one of set pressure×1.25 or set pressure +0.034

P_2: Outlet pressure (MPa)

κ : Coefficient correction (See Fig.2 in Page 90)

Δt: Difference between the saturated temperature of relieving pressure P_1 and the temperature of hot water at inlet. (°C)

γ_1: Density of the hot water at inlet (kg/L) (See Tab.2 in Page 87)

Q : Thermal input of pressure vessel or thermal output of hot water boiler (kJ/h)

ε : Coefficient of volumetrical expansion for water(1/°C) (See Tab.3 in Page 87)

C: Specific heat of water at constant pressure (kJ/kg°C) (See Tab.3 in Page 87)

Note: In the case of full-bore valve and relief valve, make sure the relieving pressure (P_1) does not exceed "maximum working pressure of pressure vessel or hot water boiler X 1.1" or "maximum working pressure + 0.034".

Applicable Laws & Regulations and Formulas for Calculating Relieving Capacity

Coefficients assigned to equations may be those specified in applicable laws/regulations or in-house data (※).

※In-house data

2. BOILER CONSTRUCTION CODE (from JIS B8210-2009)

(1) For Steam

$Qm=5.25C'K_{dr}'AP$

Qm: Relieving capacity (kg/h)

A : Seat opening area (mm^2)

Lift type: $A=\pi D\ell$

Full bore type: $A=\frac{\pi d^2}{4}$

D: Seat opening diameter (mm)

ℓ: Lift (mm)

d: Throat diameter (mm)

P: Absolute relieving pressure (MPa·A)

(Select the larger one of set pressure × 1.03 + 0.101 or set pressure + 0.015 + 0.101)

C': Coefficient determined according the property of steam (See Tab.1 in Page 87)

For saturated steam, see the following table:

Absolute relieving pressure (MPa·A)	C': Coefficient determined according the property of steam
Max.0.5	1※
over 0.5~1.0	0.98※
over 1.0~2.0	0.97※
over 2.0	0.96※

For superheated steam, see Tab.1 in Page 87.

K_{dr}': Relieving coefficient

Lift type:0.864※

Full bore type:0.777

(2) For hot water (applicable when temperature is less than 120°C. If temperature is higher than 120 °C, then use the formula described in (1))

(1) In case of searching from relieving capacity:

$$S=\frac{W}{87.7\sqrt{(P_1+0.1)\,\kappa\,\gamma_1}}$$

(2) In case of searching from thermal input of pressure vessel thermal output of hot water boiler:

$$S=\frac{Q\varepsilon}{87.7C\sqrt{(P_1+0.1)\,\kappa\,\gamma_1}}$$

In formula (i) and (ii), if $(P_1+0.1)\,\kappa > (P_1-P_2)$, then $(P_1+0.1)\kappa$ should be replaced by (P_1-P_2).

S: Seat opening area (mm^2)

W: Required relieving capacity of valve (kg/h)

Note: In the case of full-bore valve and relief valve, make sure the relieving pressure (P_1) does not exceed "maximum working pressure of pressure vessel or hot water boiler X 1.1" or "maximum working pressure + 0.034".

P_1: Relieving pressure (MPa) (see Note)

Lift type: set pressure ×1.1

For SL-37~40,43,44 type see Page 65.

Full bore type: select the larger one of set pressure×1.15 or set pressure +0.034

Relief valve (type E・ED): select the larger one of set pressure×1.25 or set pressure +0.034

P_2: Outlet pressure (MPa)

κ : Coefficient correction (See Fig.2 in Page 90)

Δt: Difference between the saturated temperature of relieving pressure P_1 and the temperature of hot water at inlet. (°C)

γ_1: Density of the hot water at inlet (kg/L) (See Tab.2 in Page 87)

Q : Thermal input of pressure vessel or thermal output of hot water boiler (kJ/h)

ε : Coefficient of volumetrical expansion for water(1/°C) (See Tab.3 in Page 87)

C: Specific heat of water at constant pressure (kJ/kg°C) (See Tab.3 in Page 87)

■ NOTE

It is necessary installing safety valve when water temperature exceeds 120°C. The fomula is as the following:

$Qm=5.25C'K_{dr}'AP$

In this case, the required relieving capacity (kg/h) of safety valve can be calculated using the following fomula:

$$W=\frac{Q}{h_1-h_2}$$

W: Required relieving capacity of safety valve (kg/h)

Q: Thermal output of hot water boiler (kJ/h)

h_1: Enthalpy of saturated steam that is equivalent to the maximum working pressure of boiler (kJ/kg).

h_2: Enthalpy of water supply (kJ/kg)

$$W=\frac{Q\varepsilon}{C}$$

ε : Coefficient of volumetrical expansion of water (1/°C) (See Tab.3 in Page 87)

C: Specific heat of water at constant pressure (kJ/kg°C) (See Tab.3 in Page 87)

(3) For dowtherm boiler

$$Qm=C''K_{dr}'P_1AK_b\sqrt{\frac{M}{ZT}}$$

Qm: Relieving capacity (kg/h)

A : Seat opening area (mm^2)

Lift type: $A=\pi D\ell$

Full bore type: $A=\frac{\pi d^2}{4}$

D: Seat opening diameter (mm)

ℓ: Lift (mm)

d: Throat diameter (mm)

Z: Compression coefficient: 1※ (See Fig.1 in Page 90)

T: Absolute temperature (K) of gases at absolute relieving pressure

P_1: Absolute relieving pressure (MPa·A)

(Select the larger one of set pressure × 1.1 + 0.101 or set pressure + 0.020 + 0.101)

P_2: Absolute back pressure (MPa·A)

C': Coefficient determined according to κ (See Tab.5, Page 88)

κ : Adiabatic exponent (Isentropic, See Tab.4 in Page 88)

The value will be 1.001 if it is not specified, in which case C"=23.95

K_{dr}': Relieving coefficient

Lift type:0.864※

Full bore type:0.777

K_b: Back pressure compensation coefficient (Depending on P_2/P_1 and κ . See Tab.6 in Page 89)

M: Molecular weight of air (See Tab.4 in Page 88)

Applicable Laws & Regulations and Formulas for Calculating Relieving Capacity

Coefficients assigned to equations may be those specified in applicable laws/regulations or in-house data (※).

※In-house data

3. JIS B8210-2009: SPRING SAFETY VALVE FOR STEAM AND GAS

(1) For Steam

$Qm=5.25C'K_{dr}'AP$

Qm: Relieving capacity (kg/h)

A : Seat opening area (mm^2)

Lift type: $A=\pi D\ell$

Full bore type: $A=\frac{\pi d^2}{4}$

D: Seat opening diameter (mm)

ℓ: Lift (mm)

d: Throat diameter (mm)

P: Absolute relieving pressure (MPa·A)

Products for boiler: (Select the larger one of set pressure × 1.03 + 0.101 or set pressure + 0.015 + 0.101)

Products for pressure vessels: (Select the larger one of set pressure × 1.1 + 0.101 or set pressure + 0.020 + 0.101)

C': Coefficient determined according to the property of steam (See Tab.1 in Page 87.)

For saturated steam, see the following table:

Absolute flow rating pressure (MPa·A)	C': Coefficient depending on the nature of steam
Max.0.5	1※
Over 0.5~1.0	0.98※
Over 1.0~2.0	0.97※
Over 2.0	0.96※

For superheated steam, See the table in Page 87.

K_{dr}': Relieving coefficient

Lift type:0.864※

Full bore type:0.777

(2) For Gases

$Qm=C''K_{dr}'P_1AK_b\sqrt{\frac{M}{ZT}}$

Qm: Relieving capacity (kg/h)

A : Seat opening area (mm^2)

Lift type: $A=\pi D\ell$

Full bore type: $A=\frac{\pi d^2}{4}$

D: Seat opening diameter (mm)

ℓ: Lift (mm)

d: Throat diameter (mm)

Z: Compression coefficient: 1※ (See Fig.1 in Page 90)

T: Absolute temperature (K) of gases at relieving pressure

P_1: Absolute relieving pressure (MPa·A)
(Select the larger one of set pressure × 1.1 + 0.101 or set pressure + 0.020 + 0.101)

P_2: Absolute back pressure (MPa·A)

C'': Coefficient determined according to κ (See Tab.5 in Page 88)

κ : adiabatic exponent (See Tab.4, Page 88)
The value will be 1.001 if it is not specified, in which case C"=23.95

K_{dr}': Relieving coefficient

Lift type:0.864※

Full bore type:0.777

K_b: Back pressure compensation coefficient (Depending on P_2/P_1 and κ . See Tab.6 in Page 89)

M: Molecular weight of air (See Tab.4 in Page 88)

4. ELECTRICITY BUSINESS ACT (Technical Standard for Thermal Equipments for Power Generation) (Formula source: JIS B8210-1994)

■ **Applicable for boilers and supporting equipments**

(1) For Steam

$Qm=5.246CK_d'A(P+0.1)\times 0.9$

Qm: Relieving capacity (kg/h)

A : Seat opening area (mm^2)

Lift type: $A=\pi D\ell$

Full bore type: $A=\frac{\pi d^2}{4}$

D: Seat opening diameter (mm)

ℓ: Lift (mm)

d: Throat diameter (mm)

P: Relieving pressure (MPa)

Set pressure≦0.1 MPa: Set pressure + 0.02

Set pressure >0.1 MPa: Set pressure × 1.03

C: Coefficient determined according to the property of steam (See Tab.1 in Page 87)

Set pressure is<0.5MPa·A, at saturated pressure:1

Set pressure is≧0.5MPa·A, at saturated pressure:0.98

Superheated steam: Please contact our agent in your area.

K_d': Rated discharge coefficient

Lift type:0.96※

Full bore type:0.864

(2) For Gases

$Qm=C'Kd'AP_1\sqrt{\frac{M}{ZT}}\times 0.9$

Qm: Relieving capacity (kg/h)

A : Seat opening area (mm^2)

Lift type: $A=\pi D\ell$

Full bore type: $A=\frac{\pi d^2}{4}$

D: Seat opening diameter (mm)

ℓ: lift (mm)

d: throat diameter (mm)

Z: Compression coefficient: 1※ (See Fig.1 in Page 90)

T: Absolute temperature (K) of gases at absolute relieving pressure

C': Coefficient determined according to κ and P_2/P_1 (See Fig.3 in Page 90)

κ : Adiabatic exponent (C_ρ/C_υ) (See Tab.4 in Page 88)
The value is considered as 1 if it is not clear.

P_2: Absolute back pressure (MPa·A)

K_d': Relieving coefficient

Lift type:0.96※

Full bore type:0.864

P_1: Absolute relieving pressure (MPa·A)
(Absolute value of "set pressure×1.1")

M: Molecular weight of gas (See Tab.4 in Page 88)

Applicable Laws & Regulations and Formulas for Calculating Relieving Capacity

Coefficients assigned to equations may be those specified in applicable laws/regulations or in-house data (※).

※In-house data

5. IN-HOUSE STANDARDS (for liquids other than water and hot water)

$$W=161\times AK\sqrt{PG}$$

W: Relieving capacity (kg/h)
A: Seat opening area (mm^2)
Lift type: $A=\pi D\ell$
Full bore type: $A=0.785d^2$
D: Seat opening diameter (mm)
ℓ: Lift (mm)
d: Throat diameter (mm)

G: Specific gravity upon the inlet side temperature
P: Relieving pressure (MPa)
K: Flow coefficient
Lift type: 0.55 for upper guide type
0.45 for blade type [The value may be different depending on type and accumulation]
Full bore type: 0.60

TABLE1. COEFFICIENT ACCORDING TO PROPERTY OF STEAM C' (JIS B8210-2009)

Absolute pressure (MPa) \ Temp. (℃)	Saturated temperature	200	220	240	260	280	300	320	340	360	380	400	420	440	460
0.5	1.004	0.994	0.971	0.950	0.931	0.912	0.895	0.879	0.863	0.848	0.834	0.821	0.808	0.796	0.784
1.0	0.986	0.980	0.982	0.960	0.938	0.919	0.900	0.883	0.867	0.852	0.837	0.824	0.810	0.798	0.786
1.5	0.976	0.975	0.969	0.969	0.946	0.925	0.906	0.888	0.871	0.855	0.843	0.826	0.813	0.800	0.788
2.0	0.971		0.966	0.963	0.955	0.932	0.912	0.893	0.875	0.859	0.844	0.829	0.815	0.802	0.790
2.5	0.968			0.960	0.965	0.940	0.918	0.898	0.880	0.863	0.847	0.832	0.818	0.805	0.792
3.0	0.966			0.961	0.956	0.948	0.925	0.904	0.884	0.867	0.850	0.835	0.821	0.807	0.794
4.0	0.964				0.957	0.953	0.939	0.915	0.895	0.875	0.857	0.841	0.826	0.811	0.798
5.0	0.965					0.955	0.952	0.929	0.905	0.884	0.865	0.847	0.831	0.816	0.802
6.0	0.968					0.962	0.953	0.943	0.917	0.893	0.873	0.854	0.837	0.821	0.807
7.0	0.971						0.959	0.954	0.930	0.904	0.881	0.861	0.843	0.826	0.811
8.0	0.975						0.968	0.956	0.944	0.915	0.890	0.869	0.849	0.832	0.816
9.0	0.980							0.963	0.960	0.927	0.900	0.877	0.856	0.837	0.820
10.0	0.987							0.972	0.962	0.941	0.911	0.885	0.863	0.843	0.825
12.0	1.000								0.977	0.973	0.935	0.904	0.878	0.856	0.836
14.0	1.019								1.005	0.982	0.964	0.926	0.896	0.870	0.848
16.0	1.039									1.005	1.001	0.952	0.916	0.886	0.861
18.0	1.068									1.044	1.007	0.977	0.933	0.903	0.875
20.0	1.100										1.036	1.011	0.958	0.917	0.890

* When pressure/temperature is an intermediate value, it is necessary to take the minimum value of absolute pressure/temperature division and do not apply the proportional method. When absolute pressure is below 0.5 MPa·A, then 0.5 MPa·A should be used as absolute pressure. For example, when relieving pressure (absolute pressure) is 1.6 MPa·A and temperature is 245°C, C' = 0.946.

TABLE2. HOT WATER SPECIFIC GRAVITY γ_1(kg/L)

(Source: Interpretation of Boiler Structure Standard)

Temp.℃ \ Pressure MPa・A	0.1	0.2	0.4	0.6	0.8	1.0	1.2	1.4	1.6	1.8	2.0	2.2	2.5
40	0.992	0.992	0.992	0.993	0.993	0.993	0.993	0.993	0.993	0.993	0.993	0.993	0.993
50	0.998	0.988	0.988	0.988	0.988	0.988	0.989	0.989	0.989	0.989	0.989	0.989	0.989
60	0.983	0.983	0.983	0.983	0.983	0.984	0.984	0.984	0.984	0.984	0.984	0.984	0.984
70	0.978	0.978	0.978	0.978	0.978	0.978	0.978	0.978	0.978	0.978	0.979	0.979	0.979
80	0.972	0.972	0.972	0.972	0.972	0.972	0.972	0.972	0.972	0.972	0.973	0.973	0.973
90	0.965	0.965	0.965	0.965	0.965	0.966	0.966	0.966	0.966	0.966	0.966	0.966	0.966
100		0.958	0.958	0.958	0.958	0.959	0.959	0.959	0.959	0.959	0.959	0.959	0.959
110		0.951	0.951	0.951	0.951	0.951	0.951	0.951	0.951	0.951	0.952	0.952	0.952
120		0.943	0.943	0.943	0.943	0.943	0.943	0.943	0.944	0.944	0.944	0.944	0.944
130			0.935	0.935	0.935	0.935	0.935	0.935	0.935	0.935	0.935	0.936	0.936
140			0.926	0.926	0.926	0.926	0.926	0.926	0.927	0.927	0.927	0.927	0.927
150				0.917	0.917	0.917	0.917	0.917	0.917	0.918	0.918	0.918	0.918
160					0.907	0.908	0.908	0.908	0.908	0.908	0.908	0.908	0.908
170					0.897	0.897	0.898	0.898	0.898	0.898	0.898	0.898	0.898
180							0.887	0.887	0.887	0.887	0.888	0.888	0.888
190								0.876	0.876	0.876	0.877	0.877	0.877
200									0.865	0.865	0.865	0.865	0.865
210											0.853	0.853	0.853
220													0.841

Note: Intermediate value should be calculated using the proportional method.
* Water density should be "1" when temperature is lower than 40°C.

TABLE3. SPECIFIC HEAT AND EXPANSION COEFFICIENT OF HOT WATER

(Source: Interpretation of Boiler Structure Standard)

Temp.℃	Specific heat of water at constant pressureC kJ/kg℃	Expansion coefficient ε 1/℃
Below 40℃	4.150	0.00039
40	4.179	0.00039
50	4.181	0.00046
60	4.185	0.00053
70	4.190	0.00060
80	4.197	0.00066
90	4.205	0.00072
100	4.216	0.00079
110	4.229	0.00085
120	4.245	0.00090
130	4.263	0.00097
140	4.285	0.00103
150	4.310	0.00110
160	4.339	0.00118
170	4.371	0.00126
180	4.408	0.00134
190	4.449	0.00145
200	4.497	0.00155
210	4.551	0.00165
220	4.613	0.00179

Note: Intermediate value should be calculated using the proportional method.

Applicable Laws & Regulations and Formulas for Calculating Relieving Capacity

TABLE4. GAS PROPERTY

(JIS B8210-2009)

Gas names	Chemical symbol	Molecular weight *M* (kg/kmol)	Adiabatic (isentropic) index κ (1.013bar a,15℃)	Critical pressure *Pc* (bar a.)	Critical temp. *Tc* (K)	Critical pressure ratio
Acetylene	C_2H_2	26.02	1.26	62.82	309.15	0.553
Air	—	28.96	1.40	37.69	132.45	0.528
Ammonia	NH_3	17.03	1.31	112.98	405.55	0.544
Argon	Ar	39.91	1.66	48.64	151.15	0.488
Normal butane	C_4H_{10}	58.08	1.11	36.48	426.15	0.583
Carbon dioxide	CO_2	44.00	1.30	73.97	304.25	0.546
Carbon monoxide	CO	28.00	1.40	35.46	134.15	0.528
Chlorine	Cl_2	70.91	1.35	77.11	417.15	0.537
Chlorofluoromethane	$CHClF_2$	86.47	1.18	49.14	370.15	0.568
Ethane	C_2H_6	30.05	1.22	49.45	305.25	0.561
Ethylene	C_2H_4	28.03	1.25	51.57	282.85	0.555
Hydrogen	H_2	2.015	1.41	12.97	33.25	0.527
Hydrogen chloride	HCl	36.46	1.41	82.68	324.55	0.527
Hydrogen sulfide	H_2S	34.08	1.32	90.08	373.55	0.542
Isobutane	$CH(CH_3)_3$	58.08	1.11	37.49	407.15	0.583
Methane	CH_4	16.03	1.31	46.41	190.65	0.544
Methyl chloride	CH_3Cl	50.48	1.28	66.47	416.25	0.549
Nitrogen	N_2	28.02	1.40	33.94	126.05	0.528
Nitrogen suboxide	N_2O	44.02	1.30	72.65	309.65	0.546
Oxygen	O_2	32.00	1.40	50.36	154.35	0.528
Propane	C_3H_3	44.06	1.13	43.57	368.75	0.579
Propylene	C_3H_6	42.05	1.15	46.60	365.45	0.574
Sulfur dioxide	SO_2	64.07	1.29	78.73	430.35	0.548

TABLE5. COEFFICIENT DEPENDING ON ADIABATIC (ISENTROPIC) EXPONENT (κ) (C") (JIS B8210-2009)

κ	C"	κ	C"	κ	C"	κ	C"	κ	C"	κ	C"
0.41	16.65	0.71	20.96	1.01	24.04	1.31	26.41	1.61	28.34	1.91	29.96
0.42	16.82	0,72	21.08	1.02	24.12	1.32	26.49	1.62	28.40	1.92	30.01
0.43	17.00	0.73	21.20	1.03	24.21	1.33	26.56	1.63	28.46	1.93	30.06
0.44	17.17	0.74	21.31	1.04	24.30	1.34	26.63	1.64	28.52	1.94	30.10
0.45	17.33	0.75	21.43	1.05	24.39	1.35	26.69	1.65	28.58	1.95	30.15
0.46	17.50	0.76	21.54	1.06	24.47	1.36	26.76	1.66	28.63	1.96	30.20
0.47	17.66	0.77	21.65	1.07	24.56	1.37	26.83	1.67	28.69	1.97	30.25
0.48	17.82	0.78	21.76	1.08	24.64	1.38	26.90	1.68	28.74	1.98	30.30
0.49	17.98	0.79	21.87	1.09	24.72	1.39	26.97	1.69	28.80	1.99	30.34
0.50	18.13	0.80	21.98	1.10	24.81	1.40	27.03	1.70	28.86	2.00	30.39
0.51	18.29	0.81	22.09	1.11	24.89	1.41	27.10	1.71	28.91	2.01	30.44
0.52	18.44	0.82	22.19	1.12	24.97	1.42	27.17	1.72	28.97	2.02	30.49
0.53	18.58	0.83	22.30	1.13	25.05	1.43	27.23	1.73	29.02	2.03	30.53
0.54	18.73	0.84	22.40	1,14	25.13	1.44	27.30	1.74	29.08	2.04	30.58
0.55	18.88	0.85	22.51	1.15	25.21	1.45	27.36	1.75	29.13	2.05	30.63
0.56	19.02	0.86	22.61	1.16	25.29	1.46	27.43	1.76	29.18	2.06	30.67
0.57	19.16	0.87	22.71	1.17	25.37	1.47	27.49	1.77	29.24	2.07	30,72
0.58	19.30	0.88	22.81	1.18	25.45	1.48	27.55	1.78	29.29	2.08	30.76
0.59	19.44	0.89	22.91	1.19	25.53	1.49	27.62	1.79	29.34	2.09	30.81
0.60	19.57	0.90	23.01	1.20	25.60	1.50	27.68	1.80	29.40	2.10	30.85
0.61	19.71	0.91	23.11	1.21	25.68	1.51	27.74	1.81	29.45	2.11	30.90
0.62	19.84	0.92	23.20	1.22	25.76	1.52	27.80	1.82	29.50	2.12	30.94
0.63	19.97	0.93	23.30	1.23	25.83	1.53	27.86	1.83	29.55	2.13	30.99
0.64	20.10	0.94	23.39	1.24	25.91	1.54	27.93	1.84	29.60	2.14	31.03
0.65	20.23	0.95	23.49	1.25	25.98	1.55	27.99	1.85	29.65	2.15	31.07
0.66	20.35	0.96	23.58	1.26	26.05	1.56	28.05	1.86	29.71	2.16	31.12
0.67	20.48	0.97	23.67	1.27	26.13	1.57	28.11	1.87	29.76	2.17	31.16
0.68	20.60	0,98	23.76	1.28	26.20	1.58	28.17	1.88	29.81	2.18	31.21
0,69	20.72	0.99	23.86	1.29	26.27	1.59	28.23	1.89	29.86	2.19	31.25
0.70	20.84	1.001	23.95	1.30	26.34	1.60	28.29	1.90	29.91	2.20	31.29

Note: Intermediate value should be calculated using the interpolational method.

Calculation formula

$$C=39.48\sqrt{\kappa\left(\frac{2}{\kappa+1}\right)^{\frac{\kappa+1}{\kappa-1}}}$$

Applicable Laws & Regulations and Formulas for Calculating Relieving Capacity

TABLE 6. Back Pressure Compensation Coefficient (K_b)

P_1: Absolute relieving pressure (MPa·A)
P_2: Absolute back pressure (MPa·A)

(JIS B8210-2009)

P_2/P_1	Adiabatic (Isentropic) exponent (κ)												
	1.001	1.1	1.2	1.3	1.4	1.5	1.6	1.7	1.8	1.9	2	2.1	2.2
0.50									1.00	1.00	0.99	0.99	0.99
0.52								1.00	0.99	0.99	0.99	0.99	0.98
0.54							1.00	0.99	0.99	0.99	0.98	0.98	0.98
0.56					1.00	1.00	0.99	0.99	0.98	0.98	0.98	0.97	0.97
0.58				1.00	0.99	0.99	0.99	0.98	0.98	0.97	0.97	0.96	0.96
0.60			1.00	0.99	0.99	0.98	0.98	0.97	0.97	0.96	0.96	0.95	0.94
0.62		1.00	0.99	0.99	0.98	0.97	0.97	0.96	0.96	0.95	0.94	0.94	0.93
0.64	1.00	0.99	0.99	0.98	0.97	0.96	0.96	0.95	0.94	0.94	0.93	0.92	0.92
0.66	0.99	0.98	0.98	0.97	0.96	0.95	0.94	0.94	0.93	0.92	0.91	0.91	0.90
0.68	0.98	0.98	0.97	0.96	0.95	0.94	0.93	0.92	0.91	0.90	0.90	0.89	0.88
0.70	0.97	0.96	0.95	0.94	0.93	0.92	0.91	0.90	0.89	0.89	0.88	0.87	0.86
0.72	0.96	0.95	0.94	0.93	0.91	0.90	0.89	0.88	0.87	0.87	0.86	0.85	0.84
0.74	0.95	0.93	0.92	0.91	0.89	0.88	0.87	0.86	0.85	0.84	0.84	0.83	0.82
0.76	0.93	0.91	0.90	0.88	0.87	0.86	0.85	0.84	0.83	0.82	0.81	0.80	0.80
0.78	0.91	0.89	0.87	0.86	0.85	0.83	0.82	0.81	0.80	0.79	0.78	0.78	0.77
0.80	0.88	0.86	0.85	0.83	0.82	0.81	0.79	0.78	0.77	0.76	0.76	0.75	0.74
0.82	0.85	0.83	0.82	0.80	0.79	0.77	0.76	0.75	0.74	0.73	0.72	0.71	0.71
0.84	0.82	0.80	0.78	0.77	0.75	0.74	0.73	0.72	0.71	0.70	0.69	0.68	0.67
0.86	0.78	0.76	0.74	0.73	0.71	0.70	0.69	0.68	0.67	0.66	0.65	0.64	0.63
0.88	0.73	0.71	0.70	0.68	0.67	0.66	0.64	0.63	0.62	0.61	0.61	0.60	0.59
0.90	0.68	0.66	0.65	0.63	0.62	0.60	0.59	0.58	0.57	0.57	0.56	0.55	0.54

Note: The intermediate values in this table are calculated using interpolation method.

Calculation formula

In the case of : $\frac{P_2}{P_1} > \left(\frac{2}{\kappa+1}\right)^{\frac{\kappa}{\kappa-1}}$: $K_b = \frac{55.83}{C''}\sqrt{\frac{\kappa}{(\kappa-1)}\left[\left(\frac{P_2}{P_1}\right)^{\frac{2}{\kappa}} - \left(\frac{P_2}{P_1}\right)^{\frac{\kappa+1}{\kappa}}\right]}$

In the case of : $\frac{P_2}{P_1} \leq \left(\frac{2}{\kappa+1}\right)^{\frac{\kappa}{\kappa-1}}$: $K_b = 1$

TABLE 7. Value C against κ

(For compliance with High Pressure Gas Safety Act)

κ	C	P_2/P_1	κ	C	P_2/P_1	κ	C	P_2/P_1	κ	C	P_2/P_1
1.00	2380	0.606	1.20	2550	0.563	1.40	2700	0.528	1.60	2820	0.496
1.02	2410	0.602	1.22	2570	0.559	1.42	2710	0.525	1.62	2830	0.493
1.04	2420	0.597	1.24	2590	0.556	1.44	2720	0.522	1.64	2850	0.490
1.06	2440	0.593	1.26	2600	0.552	1.46	2730	0.518	1.66	2860	0.488
1.08	2460	0.588	1.28	2620	0.549	1.48	2750	0.515	1.68	2870	0.485
1.10	2480	0.584	1.30	2630	0.545	1.50	2760	0.512	1.70	2880	0.482
1.12	2490	0.580	1.32	2650	0.542	1.52	2770	0.509	1.80	2940	0.468
1.14	2500	0.576	1.34	2660	0.538	1.54	2790	0.505	1.90	2980	0.456
1.16	2520	0.571	1.36	2680	0.535	1.56	2800	0.502	2.00	3030	0.444
1.18	2540	0.567	1.38	2690	0.531	1.58	2810	0.499	2.20	3130	0.422

Note: The C and P_2/P_1 values are calculated using intermediate values of κ and in interpolation method.
The C values are rounded to integer values and the P_2/P_1 values are rounded to the third digit after decimal point.

Fig.1 Coefficient of compressibility Z (JIS B8210-2009)

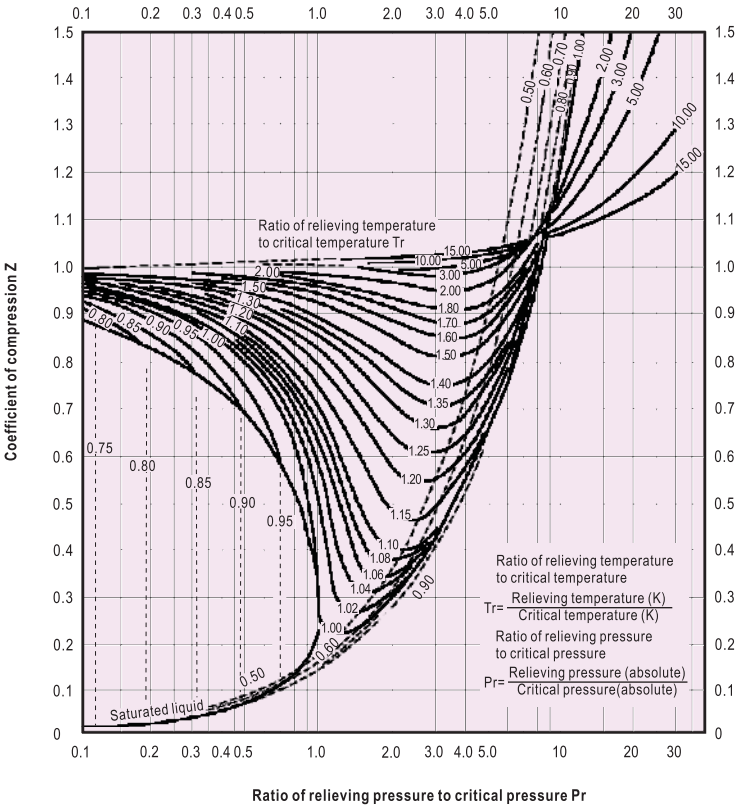

Fig.2 Δt°C correction coefficient κ

(Source: Interpretation of Boiler Structure Standard)

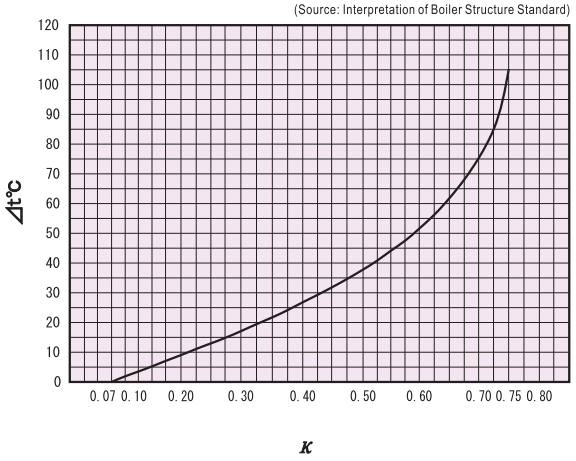

Fig.3 Coefficient (C') based on κ and P_2/P_1 (JIS B8210-2009)

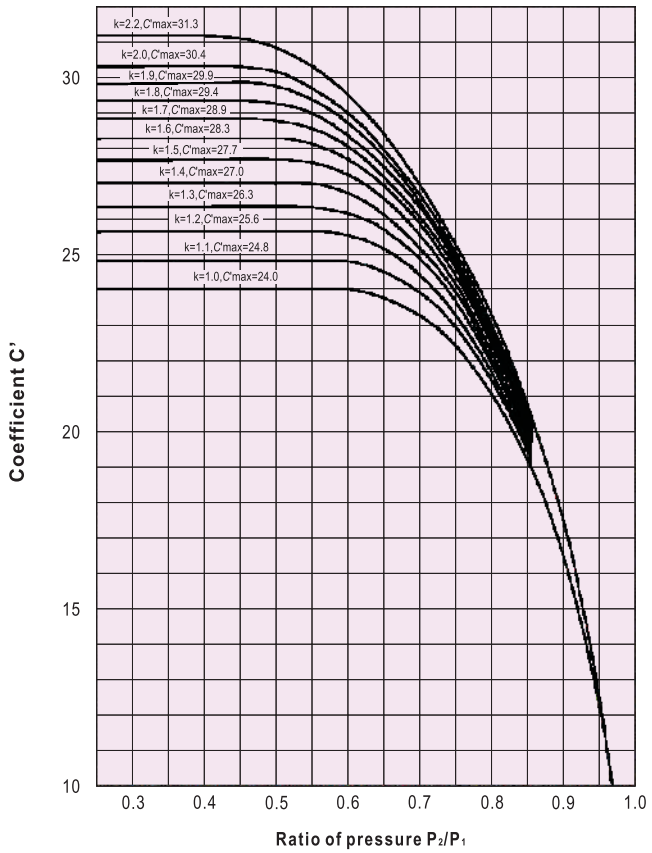

Key Points for Installation of Safety Valves and Relief Valves

1. Installation

❶ Safety valve should be vertical to pipe. Before installation, remove scale and dust and clean the surfaces that contact with gasket.

❷ The diameter of the installation pipe should be larger than the diameter of valve. To reduce pressure loss to minimum degree, the stand pipe should be as short as possible.

❸ The stand pipe should be rigid and hard enough to bear the compression force, shearing force, bending stress or other counterforce caused by relieving of safety valve.

❹ Compared with the diameter of the outlet of safety valve, the diameter of the discharge pipe should be as large as possible. The discharge pipe should be as short as possible, without any bending, lead to outside of the door or other safe place, and be properly supported to avoid the occurrence of undesired stress (including thermal stress).

When deciding the place that the outlet of the discharge pipe faces, pay attention to the following issues.

- To avoid installation place where is influenced by explosive sound and blast.
- Avoid damage to electrical equipments, machines, tools etc. in the case the fluid is steam or water.
- Avoid corrosion, poisoning, anoxia etc. in the case the fluid is harmful gas.
- In the case of screwed type safety valve or relief valve, install union joint at the discharge pipe of the outlet side to allow easy dismounting (see Fig.1 in next page).

❺ At parts of the discharge pipe where drain or rain may accumulate, install the drain outlet, which is possible to discharge drain completely,and connect to dike.

❻ In the case of full bore type safety valve for liquids or harmful gases and have faucet for adjusting back pressure, install the valve on the outlet discharge pipe (see Fig.3 in next page).

❼ To avoid adverse impact on safety valve that is caused by thermal expansion of devices or discharge pipe, install proper expansion joint at the outlet of valve and install a discharge pipe at the end (see the figure below). To limit counterforce, the distance between the axes of the valve and the center of discharge pipe should be as short as possible, and the radius of the elbow pipe should be at least 2D (D: the internal diameter of the elbow). below figure also shows the standard dimensions of the discharge pipe of safety valve.

❽ Cares should be paid on installation of valves with lever (open type). It may effuse fluid from upper cap when such valves are operating (see Fig.5 in the next page).

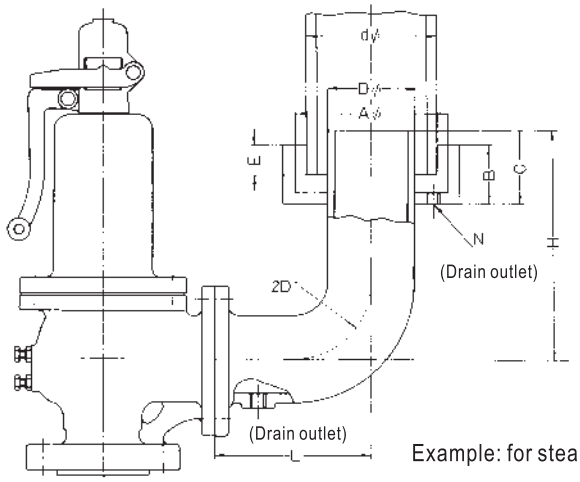

Example: for steam

■ REFERENCE DIMENSION FOR EXHAUST PIPE

(mm)

Outlet size	D	d	(A)	B	C	E	L	H	N
40(1½″)	40	65	130	60	80	30	130	220	Rc⅜″
50(2″)	50	80	150	60	90	40	150	230	Rc½″
65(2½″)	65	100	200	60	100	40	180	270	Rc½″
80(3″)	80	125	200	70	120	50	200	310	Rc½″
100(4″)	100	150	250	70	140	60	250	370	Rc¾″
125(5″)	125	200	300	80	160	70	300	430	Rc1″
150(6″)	150	200	300	80	180	70	350	500	Rc1″
200(8″)	200	250	380	100	220	80	450	610	Rc1″

2. Maintenance and operating instructions

❶ At the installation of safety valves avoid the place where there is possibility to obstruct their functions by vibration or corrosion and do not give impact from outside.

❷ After installation, make sure the pressure of the device has reached at least 75% discharge pressure of the valve before using the test lever to start the valve.

❸ Normal working pressure of the equipment shall not exceed 90% of the blowdown pressure of the valve and 80 to 85% when pulsation is expected.

❹ If possible, remove safety valve before making water pressure test. To make water pressure test without removing safety valve, pay attention to the following below (see Fig.4 in the next page).

ⓐ To prevent valve from being damaged due to improper load, when the pressure of the device reaches 80~90% of discharge pressure, install test gag* and press lightly on the end of valve shaft. The test gag must be rotated using hand. If you rotate it using spanner or other tools, there may have excessively large pressing force, the seat may be damaged, the shaft may be bended, and the valve may not function normally.

ⓑ After water pressure test and the pressure reduces to 80~90% relieving pressure,remove test gag immediately.

※ The test gag is optional item.

Key Points for Installation of Safety Valves and Relief Valves

■ PIPING EXAMPLE

Fig.1 Example: Pressure tank installation

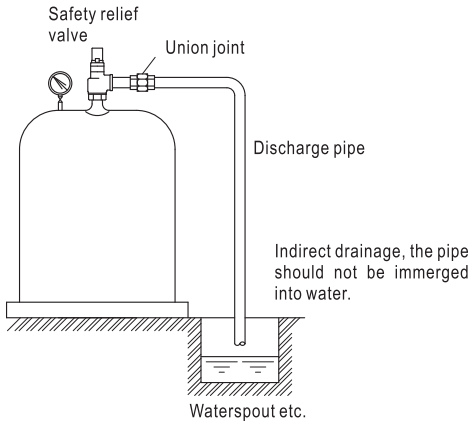

Fig.2 Example: Installation of the secondary side of pressure reducing valve

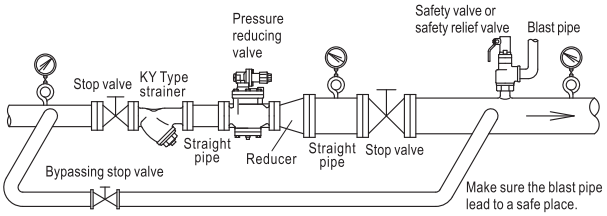

Fig.3 Example connection of back pressure adjusting cock

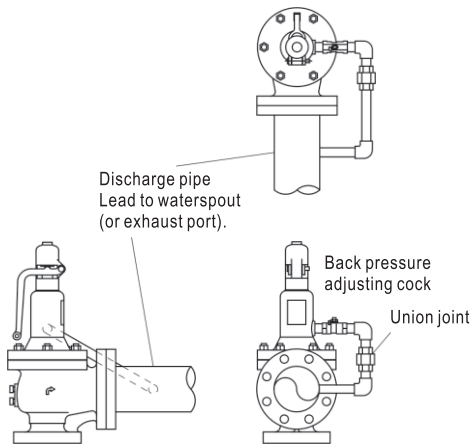

Fig.4 Installation of test gag

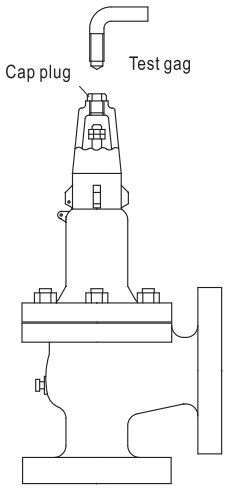

Fig.5 Lever structure

Lever structure of SL-37, 39, 39F,43 Type
For air, gas, or liquid

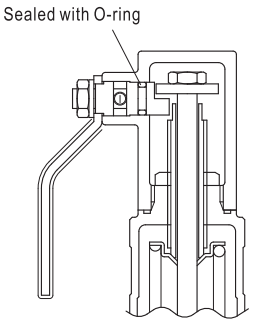

For steam

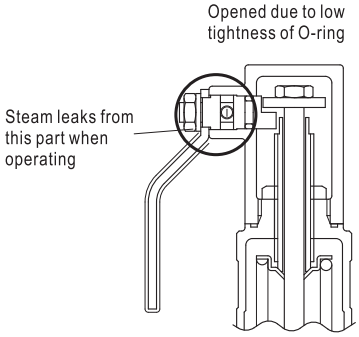

Open type lever structure

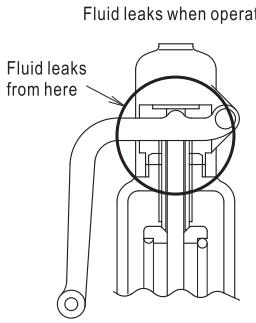

■ FULL BORE TYPE

Qm=5.25C'K$_{dr}$'AP ..... { C'=1 (when P≦0.5MPa･A) or 0.98 (when P is over 0.5~1.0 MPa･A) or 0.97 (when P is over 1.0~2.0 MPa･A) or 0.96 (when P>2.0 MPa･A)
K$_{dr}$'=0.777, P (MPa･A): the larger one of (set pressure × 1.1 + 0.101) or (set pressure + 0.02 + 0.101).) }

(kg/h)

Model name	Size (mm)	dt	A	Set pressure MPa 0.1	0.2	0.3	0.4	0.5	0.6	0.7	0.8	0.9	1.0	1.1	1.2	1.3	1.4	1.5	1.6	1.7	1.8	1.9	2.0	2.1	2.2	2.3	2.4	2.5	2.6	2.7	2.8	2.9	3.0
SF-1H, 2H	20	15	176.6	159	231	310	381	459	537	614	692	762	839	916	992	1060	1140	1220	1300	1370	1430	1510	1590										
	25	19	283.3	255	370	498	612	737	861	986	1110	1220	1340	1460	1590	1710	1830	1960	2080	2200	2300	2430	2550										
	40	30	706.5	636	925	1240	1520	1830	2140	2460	2770	3040	3350	3660	3970	4270	4580	4890	5200	5500	5750	6060	6360										
	50	38	1133.5	1020	1480	1990	2450	2940	3440	3940	4440	4890	5380	5870	6370	6860	7360	7850	8340	8840	9230	9720	10200										
SF-19L, 20L	15	11	94.9	85.5	124	166	205	246	288	330	372	409	450	492	533	574	616	657	698	740	773	814	855	896	936	977	1010	1050	1100	1140	1180	1220	1260
	20	15	176.6	159	231	310	381	459	537	614	692	762	839	916	992	1060	1140	1220	1300	1370	1430	1510	1590	1660	1740	1810	1890	1970	2040	2120	2190	2270	2350
	25	19	283.3	255	370	498	612	737	861	986	1110	1220	1340	1460	1590	1710	1830	1960	2080	2200	2300	2430	2550	2670	2790	2910	3040	3160	3280	3400	3520	3650	3770
SF-13L, 14L	25	19	283.3	255	370	498	612	737	861	986	1110	1220	1340																				
SF-13L SF-16L (0.1~1MPa)	40	25	490.6	442	642	862	1060	1270	1490	1700	1920	2110	2330	2540	2750	2970	3180	3390	3610	3820	3990	4200	4420	4630	4840	5050	5260	5470	5680	5900	6110	6320	6530
		30	706.5	636	925	1240	1520	1830	2140	2460	2770	3040	3350	3660	3970	4270	4580	4890	5200	5500	5750	6060	6360	6670	6970	7270	7580	7880	8190	8490	8800	9100	9400
	50	34	907.4	818	1180	1590	1960	2360	2760	3150	3550	3910	4310	4700	5100	5490	5890	6280	6680	7070	7390	7780	8170	8560	8950	9340	9740	10100	10500	10900	11300	11600	12000
		38	1133.5	1020	1480	1990	2450	2940	3440	3940	4440	4890	5380	5870	6370	6860	7360	7850	8340	8840	9230	9720	10200	10700	11100	11600	12100	12600	13100	13600	14100	14600	15000
	65	43	1451.4	1300	1900	2550	3130	3770	4410	5050	5690	6260	6890	7520	8160	8790	9420	10000	10600	11300	11800	12400	13000	13700	14300	14900	15500	16200	16800	17400	18000	18700	19300
		49	1884.7	1690	2460	3310	4070	4900	5730	6560	7390	8130	8950	9770	10500	11400	12200	13000	13800	14600	15300	16100	16900	17700	18600	19400	20200	21000	21800	22600	23400	24200	25100
SF-17L SF-18L (1~2MPa)	80	55	2374.6	2140	3100	4170	5130	6170	7220	8260	9310	10200	11200	12300	13300	14300	15400	16400	17400	18500	19300	20300	21300	22400	23400	24400	25400	26500	27500	28500	29500	30600	31600
		61	2920.9	2630	3820	5130	6310	7600	8880	10100	11400	12600	13800	15100	16400	17600	18900	20200	21500	22700	23800	25000	26300	27500	28800	30000	31300	32600	33800	35100	36300	37600	38900
	100	69	3737.3	3360	4890	6570	8080	9720	11300	13000	14600	16100	17700	19300	21000	22600	24200	25800	27500	29100	30400	32000	33600	35200	36800	38500	40100	41700	43300	44900	46500	48100	49700
		76	4534.1	4080	5930	7970	9800	11700	13700	15700	17700	19500	21500	23500	25400	27400	29400	31400	33300	35300	36900	38900	40800	42800	44700	46700	48600	50600	52500	54500	56400	58400	60300
SF-19L SF-20L (2~3MPa)	125	86	5805.8	5230	7600	10200	12500	15100	17600	20200	22700	25000	27500	30100	32600	35100	37600	40200	42700	45200	47300	49800	52300	54800	57300	59800	62300	64800	67300	69800	72300	74800	77300
		95	7084.6	6380	9270	12400	15300	18400	21500	24600	27700	30500	33600	36700	39800	42900	46000	49000	52100	55200	57700	60700	63800	66800	69900	72900	76000	79000	82100	85200	88200	91300	94300
	150	105	8654.6	7800	11300	15200	18700	22500	26300	30100	33900	37300	41100	44800	48600	52400	56100	59900	63700	67400	70500	74200	77900	81700	85400	89100	92800	96600	100000	104000	107000	111000	115000
		115	10381.6	9350	13500	18200	22400	27000	31500	36100	40700	44800	49300	53800	58300	62800	67400	71900	76400	80900	84600	89000	93500	98000	102000	106000	111000	115000	120000	124000	129000	133000	138000

dt:Throat dia.(mm), A:Seat opening area(mm^2)

■ LIFT TYPE

Qm=5.25C'Kdr'AP ..... { C'=1 (when P≦0.5MPa･A) or 0.98 (when P is over 0.5~1.0 MPa･A) or 0.97 (when P is over 1.0~2.0 MPa･A) or 0.96 (when P>2.0 MPa･A)
Kdr'=0.864, P (MPa･A): the larger one of (set pressure ×1.1 + 0.101) or (set pressure + 0.02 + 0.101).) }

(kg/h)

Size (mm)	D	A	Set pressure MPa 0.05	0.1	0.2	0.3	0.4	0.5	0.6	0.7	0.8	0.9	1.0	1.1	1.2	1.3	1.4	1.5	1.6	1.7	1.8	1.9	2.0	2.1	2.2	2.3	2.4	2.5	2.6	2.7	2.8	2.9	3.0
15	15	18.8	14.5	18.8	27.3	36.7	45.2	54.4	63.5	72.7	81.9	90.2	99.3	108	117	126	135	144	153	163	170	179	188	197	206	215	224	233	242	251	260	269	278
20	20	31.4	24.3	31.4	45.7	61.3	75.5	90.8	106	121	136	150	165	181	196	211	226	241	257	272	284	299	314	329	344	359	374	389	404	419	434	449	465
25	25	54.9	42.5	55	79.9	107	132	158	185	212	239	263	290	316	343	369	396	422	449	476	497	523	550	576	602	628	655	681	707	734	760	786	813
32	32	80.3	62.2	80.4	116	156	193	232	271	310	350	385	424	463	502	540	579	618	657	696	727	766	804	843	881	919	958	996	1030	1070	1110	1150	1180
40	40	125.6	97.4	125	182	245	302	363	424	486	547	602	663	724	785	846	906	967	1020	1080	1130	1190	1250	1310	1370	1430	1490	1550	1610	1670	1730	1790	1860
50	50	204.1	158	204	297	399	490	590	690	790	890	979	1070	1170	1270	1370	1470	1570	1670	1770	1840	1940	2040	2140	2240	2330	2430	2530	2630	2720	2820	2920	3020
65	65	346.9	269	347	505	678	834	1000	1170	1340	1510	1660	1830	2000	2160	2330	2500	2670	2840	3000	3140	3300	3470	3640	3800	3970	4140	4300	4470	4630	4800	4970	5130
75	75	447.4	347	448	651	874	1070	1290	1510	1730	1950	2140	2360	2580	2790	3010	3230	3440	3660	3870	4050	4260	4480	4690	4910	5120	5340	5550	5760	5980	6190	6410	6620
80	78.4	492.3	381	493	716	962	1180	1420	1660	1900	2140	2360	2600																				
100	100	785.0	608	786	1140	1530	1880	2270	2650	3030	3420	3760	4140	4520	4900	5280	5660	6040	6420	6800	7110	7480	7860	8240	8610	8990	9360	9740	10100	10400	10800	11200	11600
	99.4	780.2	605	782	1130	1520	1870	2250	2630	3020	3400	3740	4120																				
125	125	1256.0	974	1250	1820	2450	3020	3630	4240	4860	5470	6020	6630	7240	7850	8460	9060	9670	10200	10800	11300	11900	12500	13100	13700	14300	14900	15500	16100	16700	17300	17900	18600
	130	1347.0	1040	1350	1960	2630	3230	3890	4550	5210	5870	6460	7110																				
150	150	1789.8	1380	1790	2600	3490	4300	5170	6050	6920	7800	8590	9450	10300	11100	12000	12900	13700	14600	15500	16200	17000	17900	18700	19600	20500	21300	22200	23000	23900	24700	25600	26500
	160	2009.6	1550	2010	2920	3920	4830	5810	6790	7780	8760	9640	10600																				

D:Seat opening dia.(mm), A:Seat opening area(mm^2) * Refer to Page 65 for safety relief valves (SL-37~40, 39F, 40F, 43, 44 Type).

■ FULL BORE TYPE

$$Qm = C'' K_{dr}' P_1 A K_b \sqrt{\frac{M}{ZT}}$$ ..... { C''=27.03, K_{dr}'=0.777, M=28.96, Z=1, T=293; P_1 = the larger one of (set pressure ×1.1+0.101) or (set pressure +0.02+0.101) }

(kg/h)

Model name	Size (mm)	dt	A	Set pressure MPa 0.1	0.2	0.3	0.4	0.5	0.6	0.7	0.8	0.9	1.0	1.1	1.2	1.3	1.4	1.5	1.6	1.7	1.8	1.9	2.0	2.1	2.2	2.3	2.4	2.5	2.6	2.7	2.8	2.9	3.0
SF-1H, 2H	20	15	176.6	257	374	502	630	759	887	1010	1140	1270	1400	1520	1650	1780	1910	2040	2170	2290	2420	2550	2680										
	25	19	283.3	413	600	806	1010	1210	1420	1620	1830	2040	2240	2450	2650	2860	3060	3270	3480	3680	3890	4090	4300										
	40	30	706.5	1030	1490	2010	2520	3030	3550	4060	4570	5080	5600	6110	6620	7140	7650	8160	8680	9190	9700	10200	10700										
	50	38	1133.5	1650	2400	3220	4040	4870	5690	6510	7340	8160	8980	9810	10600	11400	12200	13100	13900	14700	15500	16300	17200										
SF-19L, 20L	15	11	94.9	138	201	270	338	407	476	545	614	683	752	821	890	959	1020	1090	1160	1230	1300	1370	1440	1510	1570	1640	1710	1780	1850	1920	1990	2060	2130
	20	15	176.6	257	374	502	630	759	887	1010	1140	1270	1400	1520	1650	1780	1910	2040	2170	2290	2420	2550	2680	2810	2930	3060	3190	3320	3450	3580	3700	3830	3960
	25	19	283.3	413	600	806	1010	1210	1420	1620	1830	2040	2240	2450	2650	2860	3060	3270	3480	3680	3890	4090	4300	4500	4710	4920	5120	5330	5530	5740	5950	6150	6360
SF-13L, 14L	25	19	283.3	413	600	806	1010	1210	1420	1620	1830	2040	2240																				
SF-13L SF-16L (0.1~1MPa) SF-17L SF-18L (1~2MPa) SF-19L SF-20L (2~3MPa)	40	25	490.6	715	1030	1390	1750	2100	2460	2820	3170	3530	3890	4240	4600	4950	5310	5670	6020	6380	6740	7090	7450	7810	8160	8520	8870	9230	9590	9940	10300	10600	11000
		30	706.5	1030	1490	2010	2520	3030	3550	4060	4570	5080	5600	6110	6620	7140	7650	8160	8680	9190	9700	10200	10700	11200	11700	12200	12700	13200	13800	14300	14800	15300	15800
	50	34	907.4	1320	1920	2580	3240	3900	4550	5210	5870	6530	7190	7850	8510	9170	9830	10400	11100	11800	12400	13100	13700	14400	15100	15700	16400	17000	17700	18300	19000	19700	20300
		38	1133.5	1650	2400	3220	4040	4870	5690	6510	7340	8160	8980	9810	10600	11400	12200	13100	13900	14700	15500	16300	17200	18000	18800	19600	20500	21300	22100	22900	23800	24600	25400
	65	43	1451.4	2110	3070	4130	5180	6230	7290	8340	9400	10400	11500	12500	13600	14600	15700	16700	17800	18800	19900	20900	22000	23100	24100	25200	26200	27300	28300	29400	30400	31500	32500
		49	1884.7	2750	3990	5360	6730	8100	9470	10800	12200	13500	14900	16300	17600	19000	20400	21700	23100	24500	25800	27200	28600	30000	31300	32700	34100	35400	36800	38200	39500	40900	42300
	80	55	2374.6	3460	5030	6750	8480	10200	11900	13600	15300	17100	18800	20500	22200	24000	25700	27400	29100	30900	32600	34300	36000	37800	39500	41200	42900	44700	46400	48100	49800	51600	53300
		61	2920.9	4260	6190	8310	10400	12500	14600	16700	18900	21000	23100	25200	27400	29500	31600	33700	35800	38000	40100	42200	44300	46400	48600	50700	52800	54900	57100	59200	61300	63400	65500
	100	69	3737.3	5450	7920	10600	13300	16000	18700	21400	24200	26900	29600	32300	35000	37700	40400	43200	45900	48600	51300	54000	56700	59400	62200	64900	67600	70300	73000	75700	78400	81200	83900
		76	4534.1	6610	9610	12900	16100	19400	22700	26000	29300	32600	35900	39200	42500	45800	49100	52400	55700	59000	62300	65500	68800	72100	75400	78700	82000	85300	88600	91900	95200	98500	101000
	125	86	5805.8	8470	12300	16500	20700	24900	29100	33300	37600	41800	46000	50200	54400	58600	62900	67100	71300	75500	79700	83900	88200	92400	96600	100000	105000	109000	113000	117000	121000	126000	130000
		95	7084.6	10300	15000	20100	25300	30400	35500	40700	45800	51000	56100	61300	66400	71600	76700	81900	87000	92200	97300	102000	107000	112000	117000	123000	128000	133000	138000	143000	148000	153000	159000
	150	105	8654.6	12600	18300	24600	30900	37200	43400	49700	56000	62300	68600	74900	81200	87400	93700	100000	106000	112000	118000	125000	131000	137000	144000	150000	156000	162000	169000	175000	181000	188000	194000
		115	10381.6	15100	22000	29500	37000	44600	52100	59700	67200	74700	82300	89800	97400	104000	112000	120000	127000	135000	142000	150000	157000	165000	172000	180000	187000	195000	202000	210000	218000	225000	233000

dt:Throat dia.(mm), A:Seat opening area(mm^2)

■ LIFT TYPE

$$Qm = C'' K_{dr}' P_1 A K_b \sqrt{\frac{M}{ZT}}$$ ..... { C''=27.03, K_{dr}'=0.864, M=28.96, Z=1, T=293; P_1 = the larger one of (set pressure ×1.1+0.101) or (set pressure +0.02+0.101) }

(kg/h)

Size (mm)	D	A	Set pressure MPa 0.05	0.1	0.2	0.3	0.4	0.5	0.6	0.7	0.8	0.9	1.0	1.1	1.2	1.3	1.4	1.5	1.6	1.7	1.8	1.9	2.0	2.1	2.2	2.3	2.4	2.5	2.6	2.7	2.8	2.9	3.0
15	15	18.8	23.3	30.5	44.3	59.4	74.6	89.8	105	120	135	150	165	180	196	211	226	241	256	272	287	302	317	332	347	363	378	393	408	423	439	454	469
20	20	31.4	39	50.9	74	99.3	124	150	175	200	226	251	276	302	327	352	378	403	429	454	479	505	530	555	581	606	631	657	682	708	733	758	784
25	25	54.9	68.2	89	129	173	218	262	306	351	395	439	484	528	572	617	661	705	750	794	838	883	927	971	1010	1060	1100	1140	1190	1230	1280	1320	1370
32	32	80.3	99.8	130	189	254	318	383	448	513	578	643	708	772	837	902	967	1030	1090	1160	1220	1290	1350	1420	1480	1550	1610	1680	1740	1810	1870	1940	2000
40	40	125.6	156	203	296	397	498	600	701	803	904	1000	1100	1200	1310	1410	1510	1610	1710	1810	1910	2020	2120	2220	2320	2420	2520	2620	2730	2830	2930	3030	3130
50	50	204.1	253	331	481	645	810	975	1140	1300	1470	1630	1790	1960	2120	2290	2450	2620	2780	2950	3110	3280	3440	3610	3770	3940	4100	4270	4430	4600	4760	4930	5090
65	65	346.9	431	562	817	1090	1370	1650	1930	2210	2490	2770	3050	3330	3610	3890	4170	4450	4730	5020	5300	5580	5860	6140	6420	6700	6980	7260	7540	7820	8100	8380	8660
75	75	447.4	556	725	1050	1410	1770	2130	2490	2860	3220	3580	3940	4300	4660	5020	5390	5750	6110	6470	6830	7190	7550	7910	8280	8640	9000	9360	9720	10000	10400	10800	11100
80	78.4	492.3	611	798	1160	1550	1950	2350	2750	3140	3540	3940	4340																				
100	100	785.0	975	1270	1850	2480	3110	3750	4380	5020	5650	6280	6920	7550	8190	8820	9450	10000	10700	11300	11900	12600	13200	13800	14500	15100	15700	16400	17000	17700	18300	18900	19600
	99.4	780.2	969	1260	1830	2460	3090	3720	4350	4980	5610	6240	6870																				
125	125	1256.0	1560	2030	2960	3970	4980	6000	7010	8030	9040	10000	11000	12000	13100	14100	15100	16100	17100	18100	19100	20200	21200	22200	23200	24200	25200	26200	27300	28300	29300	30300	31300
	130	1347.0	1670	2180	3170	4260	5350	6430	7520	8610	9700	10700	11800																				
150	150	1789.8	2220	2900	4210	5660	7100	8550	10000	11400	12800	14300	15700	17200	18600	20100	21500	23000	24400	25900	27300	28700	30200	31600	33100	34500	36000	37400	38900	40300	41800	43200	44600
	160	2009.6	2490	3260	4730	6350	7980	9600	11200	12800	14400	16000	17700																				

D:Seat opening dia.(mm), A:Seat opening area(mm^2) * Refer to Page 65 for safety relief valves (SL-37~40, 39F, 40F, 43, 44 Type).

■ FULL BORE TYPE

Qm=5.25C'Kdr'AP ..... { C'=1 (when P≦0.5MPa·A), or 0.98 (when P is over 0.5~1.0 MPa·A), or 0.97 (when P is over 1.0~2.0 MPa·A), or 0.96 (when P>2.0 MPa·A)
Kdr'=0.777, P (MPa·A): the larger one of (set pressure ×1.1 + 0.101) or (set pressure + 0.02 + 0.101).)

(kg/h)

Model name	Size (mm)	dt	A	Set pressure MPa 0.1	0.2	0.3	0.4	0.5	0.6	0.7	0.8	0.9	1.0	1.1	1.2	1.3	1.4	1.5	1.6	1.7	1.8	1.9	2.0	2.1	2.2	2.3	2.4	2.5	2.6	2.7	2.8	2.9	3.0
SF-1H, 2H	20	15	176.6	155	227	299	364	434	507	580	653	725	798	871	943	1010	1080	1160	1230	1300	1380	1450	1520										
	25	19	283.3	249	365	480	584	697	814	930	1040	1160	1280	1390	1510	1630	1740	1860	1980	2090	2210	2330	2440										
	40	30	706.5	622	910	1190	1450	1730	2030	2320	2610	2900	3190	3480	3770	4060	4350	4640	4930	5230	5520	5810	6100										
	50	38	1133.5	998	1460	1920	2330	2790	3250	3720	4190	4650	5120	5590	6050	6520	6990	7450	7920	8390	8850	9320	9790										
SF-19L, 20L	15	11	94.9	83.6	122	161	195	233	272	311	350	390	429	468	507	546	585	624	663	702	741	780	819	858	897	937	976	1010	1050	1090	1130	1170	1210
	20	15	176.6	155	227	299	364	434	507	580	653	725	798	871	943	1010	1080	1160	1230	1300	1380	1450	1520	1590	1670	1740	1810	1880	1960	2030	2100	2180	2250
	25	19	283.3	249	365	480	584	697	814	930	1040	1160	1280	1390	1510	1630	1740	1860	1980	2090	2210	2330	2440	2560	2680	2790	2910	3030	3140	3260	3380	3490	3610
SF-13L, 14L	25	19	283.3	249	365	480	584	697	814	930	1040	1160	1280																				
SF-13L	40	25	490.6	432	632	832	1010	1200	1410	1610	1810	2010	2210	2420	2620	2820	3020	3220	3430	3630	3830	4030	4230	4440	4640	4840	5040	5240	5450	5650	5850	6050	6250
		30	706.5	622	910	1190	1450	1730	2030	2320	2610	2900	3190	3480	3770	4060	4350	4640	4930	5230	5520	5810	6100	6390	6680	6970	7260	7550	7840	8130	8430	8720	9010
SF-16L (0.1~1MPa)	50	34	907.4	799	1160	1530	1870	2230	2600	2980	3350	3720	4100	4470	4840	5220	5590	5970	6340	6710	7090	7460	7830	8210	8580	8950	9330	9700	10000	10400	10800	11200	11500
		38	1133.5	998	1460	1920	2330	2790	3250	3720	4190	4650	5120	5590	6050	6520	6990	7450	7920	8390	8850	9320	9790	10200	10700	11100	11600	12100	12500	13000	13500	13900	14400
	65	43	1451.4	1270	1870	2460	2990	3570	4170	4760	5360	5960	6560	7150	7750	8350	8950	9550	10100	10700	11300	11900	12500	13100	13700	14300	14900	15500	16100	16700	17300	17900	18500
		49	1884.7	1660	2420	3190	3880	4640	5410	6190	6960	7740	8520	9290	10000	10800	11600	12400	13100	13900	14700	15500	16200	17000	17800	18600	19300	20100	20900	21700	22400	23200	24000
SF-17L SF-18L (1~2MPa)	80	55	2374.6	2090	3060	4020	4890	5840	6820	7800	8780	9750	10700	11700	12600	13600	14600	15600	16600	17500	18500	19500	20500	21400	22400	23400	24400	25400	26300	27300	28300	29300	30200
		61	2920.9	2570	3760	4950	6020	7190	8390	9590	10800	12000	13200	14400	15600	16800	18000	19200	20400	21600	22800	24000	25200	26400	27600	28800	30000	31200	32400	33600	34800	36000	37200
	100	69	3737.3	3290	4810	6340	7700	9200	10700	12200	13800	15300	16800	18400	19900	21500	23000	24500	26100	27600	29200	30700	32200	33800	35300	36900	38400	39900	41500	43000	44500	46100	47600
		76	4534.1	3990	5840	7690	9350	11100	13000	14800	16700	18600	20500	22300	24200	26100	27900	29800	31700	33500	35400	37300	39100	41000	42900	44700	46600	48500	50300	52200	54100	55900	57800
SF-19L SF-20L (2~3MPa)	125	86	5805.8	5110	7480	9850	11900	14200	16600	19000	21400	23800	26200	28600	31000	33400	35800	38200	40500	42900	45300	47700	50100	52500	54900	57300	59700	62100	64400	66800	69200	71600	74000
		95	7084.6	6240	9130	12000	14600	17400	20300	23200	26100	29100	32000	34900	37800	40700	43700	46600	49500	52400	55300	58200	61200	64100	67000	69900	72800	75700	78700	81600	84500	87400	90300
	150	105	8654.6	7620	11100	14600	17800	21300	24800	28400	32000	35500	39100	42600	46200	49800	53300	56900	60500	64000	67600	71200	74700	78300	81800	85400	89000	92500	96100	99700	103000	106000	110000
		115	10381.6	9140	13300	17600	21400	25500	29800	34100	38300	42600	46900	51200	55400	59700	64000	68300	72500	76800	81100	85400	89600	93900	98200	102000	106000	111000	115000	119000	123000	128000	132000

dt:Throat dia.(mm), A:Seat opening area(mm^2)

■ LIFT TYPE

Qm=5.25C'K_{dr}'AP ..... { C'=1 (when P≦0.5MPa·A), or 0.98 (when P is over 0.5~1.0 MPa·A), or 0.97 (when P is over 1.0~2.0 MPa·A), or 0.96 (when P>2.0 MPa·A)
K_{dr}'=0.864, P (MPa·A): the larger one of (set pressure × 1.1 + 0.101) or (set pressure + 0.02 + 0.101).)

(kg/h)

Size (mm)	D	A	Set pressure MPa 0.05	0.1	0.2	0.3	0.4	0.5	0.6	0.7	0.8	0.9	1.0	1.1	1.2	1.3	1.4	1.5	1.6	1.7	1.8	1.9	2.0	2.1	2.2	2.3	2.4	2.5	2.6	2.7	2.8	2.9	3.0
15	15	18.8*	14.1	18.4	26.9	35.4	43.1	51.4	60	68.6	77.3	85.9	94.5	103	111	120	128	137	146	154	163	171	180	189	197	206	215	223	232	240	249	258	266
20	20	31.4*	23.6	30.7	45	59.2	72	85.9	100	114	129	143	157	172	186	200	215	229	244	258	272	287	301	316	330	344	359	373	387	402	416	431	445
25	25	54.9*	41.3	53.7	78.6	103	125	150	175	200	225	250	276	301	326	351	376	401	426	451	477	502	527	552	577	602	627	653	678	703	728	753	778
32	32	80.3	60.4	78.6	115	151	184	219	256	293	330	366	403	440	477	514	550	587	624	661	697	734	771	808	844	881	918	955	991	1020	1060	1100	1130
40	40	125.6	94.5	123	180	237	288	343	401	458	516	573	631	688	746	803	861	919	976	1030	1090	1140	1200	1260	1320	1370	1430	1490	1550	1600	1660	1720	1780
50	50	204.1	153	199	292	385	468	558	652	745	839	932	1020	1110	1210	1300	1390	1490	1580	1680	1770	1860	1960	2050	2140	2240	2330	2420	2520	2610	2700	2800	2890
65	65	346.9	261	339	497	654	795	949	1100	1260	1420	1580	1740	1900	2060	2220	2370	2530	2690	2850	3010	3170	3330	3490	3650	3800	3960	4120	4280	4440	4600	4760	4920
75	75	447.4	336	438	641	844	1020	1220	1420	1630	1830	2040	2240	2450	2650	2860	3060	3270	3470	3680	3880	4090	4290	4500	4700	4910	5110	5320	5520	5730	5930	6140	6340
80	78.4	492.3	370	482	705	928	1120	1340	1570	1790	2020	2240	2470																				
100	100	785.0	591	769	1120	1480	1800	2140	2500	2860	3220	3580	3940	4300	4660	5020	5380	5740	6100	6460	6820	7180	7540	7900	8250	8610	8970	9330	9690	10000	10400	10700	11100
	99.4	780.2	587	764	1110	1470	1780	2130	2490	2850	3200	3560	3920																				
125	125	1256.0	945	1230	1800	2370	2880	3430	4010	4580	5160	5730	6310	6880	7460	8030	8610	9190	9760	10300	10900	11400	12000	12600	13200	13700	14300	14900	15500	16000	16600	17200	17800
	130	1347.0	1010	1310	1930	2540	3080	3680	4300	4920	5530	6150	6770																				
150	150	1789.8	1340	1750	2560	3370	4100	4900	5720	6530	7350	8170	8990	9810	10600	11400	12200	13000	13900	14700	15500	16300	17100	18000	18800	19600	20400	21200	22100	22900	23700	24500	25300
	160	2009.6	1510	1960	2880	3790	4600	5500	6420	7340	8260	9180	10100																				

D:Seat opening dia.(mm), A:Seat opening area(mm^2)

※ The seat opening area and relieving capacity of safety relief vales (SL-37~40, 39F, 40F Type (Page 62~64) and SL-43, 44 Type (Page 66)) are different from the values in this table.

E141242A

RELIEVING CAPACITY (VENN STANDARD)

■ FULL BORE TYPE

W=161×AK$\sqrt{PG}$ (K=0.6, G=1, Accumulation 15% A=0.785dt²)

(10^3kg/h)

Size mm	Set pressure MPa	0.1	0.2	0.3	0.4	0.5	0.6	0.7	0.8	0.9	1.0	1.1	1.2	1.3	1.4	1.5	1.6	1.7	1.8	1.9	2.0	2.1	2.2	2.3	2.4	2.5	2.6	2.7	2.8	2.9	3.0
SF-20 15	11	3.10	4.39	5.38	6.21	6.95	7.61	8.22	8.79	9.32	9.83	10.3	10.7	11.2	11.6	12.0	12.4	12.8	13.1	13.5	13.9	14.2	14.5	14.9	15.2	15.5	15.8	16.1	16.4	16.7	17.0
SF-20 20	15	5.78	8.18	10.0	11.5	12.9	14.1	15.3	16.3	17.3	18.2	19.1	20.0	20.8	21.6	22.4	23.1	23.8	24.5	25.2	25.8	26.5	27.1	27.7	28.3	28.9	29.4	30.3	30.6	31.1	31.6
SF-20 25	19	9.28	13.1	16.0	18.5	20.7	22.7	24.5	26.2	27.8	29.3	30.7	32.1	33.4	34.7	35.9	37.1	38.2	39.3	40.4	41.5	42.5	43.5	44.5	45.4	46.4	47.3	48.2	49.1	49.9	50.8
SF-14 25	19	9.28	13.1	16.0	18.5	20.7	22.7	24.5	26.2	27.8	29.3																				
SF-14 SF-16 (0.1~1MPa) 40	25	16.0	22.7	27.8	32.1	35.9	39.3	42.5	45.4	48.2	50.8	53.3	55.6	57.9	60.1	62.2	64.2	66.2	68.1	70.0	71.8	73.6	75.3	77.0	78.7	80.3	81.9	83.5	85.0	86.5	88.0
SF-14 SF-16 (0.1~1MPa) 40	30	23.1	32.7	40.0	46.2	51.7	56.6	61.2	65.4	69.4	73.1	76.7	80.1	83.4	86.5	89.6	92.5	95.4	98.1	100	103	106	108	110	113	115	118	120	122	124	126
SF-14 SF-16 (0.1~1MPa) 50	34	29.7	42.0	51.4	59.4	66.4	72.8	78.6	84.0	89.1	93.9	98.5	102	107	111	115	118	122	126	129	132	136	139	142	145	148	151	154	157	160	162
SF-14 SF-16 (0.1~1MPa) 50	38	37.1	52.5	64.3	74.2	83.0	90.9	98.2	105	111	117	123	128	133	138	143	148	153	157	161	166	170	174	178	181	185	189	192	196	199	203
SF-14 SF-16 (0.1~1MPa) 65	43	47.5	67.2	82.3	95.0	106	116	125	134	142	150	157	164	171	177	184	190	196	201	207	212	217	223	228	232	237	242	247	251	256	260
SF-14 SF-16 (0.1~1MPa) 65	49	61.7	87.3	107	123	138	151	163	174	185	195	204	213	222	231	239	246	254	261	269	276	282	289	296	302	308	314	320	326	332	338
SF-18 (1~2MPa) 80	55	77.7	110	135	156	174	190	205	220	233	245	257	269	280	291	301	311	320	330	339	347	356	364	373	381	388	396	404	411	418	426
SF-18 (1~2MPa) 80	61	95.6	135	166	191	214	234	253	270	287	302	317	331	344	358	370	382	394	405	417	427	438	448	458	468	478	487	497	506	515	524
SF-20 (2~3MPa) 100	69	122	173	212	245	274	299	323	346	367	387	406	424	441	458	474	489	504	519	533	547	561	574	587	599	612	624	636	647	659	670
SF-20 (2~3MPa) 100	76	149	210	257	297	332	363	392	420	445	469	492	514	535	555	575	594	612	630	647	664	680	696	712	727	742	757	771	785	799	813
SF-20 (2~3MPa) 125	86	190	269	329	380	425	465	503	537	570	601	630	658	685	711	736	760	784	806	829	850	871	892	912	931	950	969	988	1000	1020	1040
SF-20 (2~3MPa) 125	95	232	328	402	464	519	568	614	656	696	733	769	803	836	868	898	928	956	984	1010	1030	1060	1080	1110	1130	1160	1180	1200	1220	1240	1270
SF-20 (2~3MPa) 150	105	284	401	491	567	634	694	750	801	850	896	940	982	1020	1060	1090	1130	1160	1200	1230	1260	1290	1320	1350	1380	1410	1440	1470	1500	1520	1550
SF-20 (2~3MPa) 150	115	340	481	589	680	760	833	899	961	1020	1070	1120	1170	1220	1270	1310	1360	1400	1440	1480	1520	1550	1590	1630	1660	1700	1730	1760	1790	1830	1860

P:Relieving pressure(MPa), dt:Throat dia.(mm)

∗1. Coefficient K and Accumulation are different according to types.
∗2. P (MPa), which is for actual calculation to decide discharge amount, is (P)+(Accumulation)−(Back pressure)

■ LIFT TYPE

W=161×AK$\sqrt{PG}$ (K=0.55, G=1, Accumulation 10% A=π Dℓ)

(10^3kg/h)

Size mm	D	Set pressure MPa 0.1	0.2	0.3	0.4	0.5	0.6	0.7	0.8	0.9	1.0	1.1	1.2	1.3	1.4	1.5	1.6	1.7	1.8	1.9	2.0	2.1	2.2	2.3	2.4	2.5	2.6	2.7	2.8	2.9	3.0
15	15	0.552	0.780	0.956	1.10	1.23	1.35	1.46	1.56	1.65	1.74	1.83	1.91	1.99	2.06	2.13	2.20	2.27	2.34	2.40	2.46	2.53	2.58	2.64	2.70	2.76	2.81	2.86	2.92	2.97	3.02
20	20	0.922	1.30	1.59	1.84	2.06	2.25	2.43	2.60	2.76	2.91	3.05	3.19	3.32	3.45	3.57	3.68	3.80	3.91	4.01	4.12	4.22	4.32	4.42	4.51	4.61	4.70	4.79	4.87	4.96	5.05
25	25	1.61	2.28	2.79	3.22	3.60	3.94	4.26	4.56	4.83	5.09	5.34	5.58	5.18	6.03	6.24	6.44	6.64	6.84	7.02	7.21	7.38	7.56	7.73	7.89	8.06	8.22	8.37	8.53	8.68	8.83
32	32	2.35	3.33	4.08	4.71	5.27	5.77	6.23	6.67	7.07	7.45	7.82	8.16	8.50	8.82	9.13	9.43	9.72	10.0	10.2	10.5	10.8	11.0	11.3	11.5	11.7	12.0	12.2	12.4	12.6	12.9
40	40	3.68	5.21	6.38	7.37	8.24	9.03	9.75	10.4	11.0	11.6	12.5	12.7	13.2	13.8	14.2	14.7	15.2	15.6	16.0	16.4	16.9	17.3	17.6	18.0	18.4	18.8	19.1	19.5	19.8	20.2
50	50	5.99	8.47	10.3	11.9	13.4	14.6	15.8	16.9	17.9	18.9	19.8	20.7	21.6	22.4	23.2	23.9	24.7	25.4	26.1	26.8	27.4	28.1	28.7	29.3	29.9	30.5	31.1	31.7	32.2	32.8
65	65	10.1	14.4	17.6	20.3	22.7	24.9	26.9	28.8	30.5	32.2	33.7	35.2	36.7	38.1	39.4	40.7	42.0	43.2	44.4	45.5	46.6	47.7	48.8	49.9	50.9	51.9	52.9	53.9	54.8	55.8
75	75	13.1	18.5	22.7	26.2	29.3	32.1	34.7	37.1	39.4	41.5	43.5	45.5	47.3	49.1	50.8	52.5	54.1	55.7	57.2	58.7	60.2	61.6	63.0	64.3	65.6	66.9	68.2	69.5	70.7	71.9
80	78.4	14.4	20.4	25.0	28.9	32.3	35.4	38.2	40.8	43.3	45.7	47.9	50.0	52.1	54.0	55.9	57.8	59.6	61.3	63.0	64.6	66.2	67.8	69.3	70.8	72.2	73.7	75.1	76.5	77.8	79.1
100	100	22.9	32.4	39.6	45.8	51.2	56.1	60.6	64.8	68.7	72.4	75.9	79.3	82.6	85.7	88.7	91.6	94.4	97.2	99.8	102	105	107	109	112	114	116	119	121	123	125
100	99.4	23.0	32.6	39.9	46.1	51.5	56.4	60.9	65.2	69.1	72.9	76.4	79.8	83.1	86.2	89.2	92.2	95.0	97.8	100	103	105	108	110	112	115	117	119	121	124	126
125	125	36.8	52.1	63.8	73.7	82.4	90.3	97.5	104	110	116	122	127	132	138	142	147	152	156	160	164	169	173	176	180	184	188	191	195	198	202
125	130	39.5	55.9	68.5	79.1	88.4	96.9	104	111	118	125	131	137	142	148	153	158	163	167	172	176	181	185	189	193	197	201	205	209	213	216
150	150	52.5	74.3	91.0	105	117	128	139	148	157	166	174	182	189	196	203	210	216	223	229	235	240	246	252	257	262	268	273	278	283	287
150	160	59.0	83.4	102	118	131	144	156	166	177	186	195	204	212	220	228	236	243	250	257	263	270	276	283	289	295	300	306	312	317	323

P:Relieving pressure (MPa), D:Seat opening dia.(mm), R:Lift(A)

∗1. Coefficient K, Accumulation and Lift are different according to types.
∗2. Refer to Page 65 for safety relief valves (SL-37~40,39F ,40F, 43, 44 Type).
∗3. P (MPA), which is for actual calculation to decide discharge amount, is (P)+(Accumulation)−(Back pressure)
∗4. The relieving capacity of safety relief vales (SL-37~40, 39F, 40F Type (Page 62~64) and SL-43, 44 Type (Page 66)) are different from the values in this table.

<Liquids>
(Except hot water and water)

CIRCUIT VALVES PRIMARY PRESSURE REGULATING VALVES

4

Circuit valve is one of pressure regulating valves used for air conditioning system in high/ medium height buildings.
Primary pressure regulating valve is used as pump relief that can maintain the discharge pressure of pump at a constant level.
Pressure sustaining valve can prevent water from falling in return pipe in open circuit.
Differential pressure regulating valve can be used as pump bypass valve (pump relief) in closed circuit.

■ PRIMARY PRESSURE REGULATING VALVES

Model name	End connection	Size	Applicable pressure(MPa)	Applicable fluid	Materials		Page
					Body	Trim	
MD-14W,14H	Flanged	15~80(½″~3″)	0.05~0.7	Water,hot water or oils	Cast iron	Cast bronze & Stainless steel & Synthetic rubber	98
		100~150(4″~6″)	0.05~0.5				
MD-14CN		20~80(¾″~3″)	0.05~0.7				
		100~150(4″~6″)	0.05~0.5				
WVM-02	Flanged	40~50(1½″~2″)	0.5~1.0	Water or hot water	Cast iron or ductile cast iron	Cast bronze & Synthetic rubber	99
		65~200(2½″~8″)	0.05~1.0				
		250~400(10″~16″)	0.05~0.7		Cast iron		
WVM-02CN		80~200(3″~8″)	0.05~1.0		Cast iron		
MD-35F	Flanged	25~50(1″~2″)	0.05~0.8	Water, hot water, air or oil	Stainless steel	Stainless steel & Synthetic rubber	102
		65~100(2½″~4″)	0.05~0.6				
MD-37F	Flanged	25~50(1″~2″)					
MD-1A	Flanged	15~50(½″~2″)	0.5~3.0	Oils or liquids	Carbon steel or Stainless steel	Stainless steel	112
MD-2P	Flanged	20~150(¾″~6″)	0.05~0.7	Oils or liquids	Cast iron	Cast bronze	113
					Cast steel	Stainless steel	
MD-22	Flanged	20~50(¾″~2″)	0.05~0.7	Fuel oils or oils	Ductile cast iron	Synthetic rubber	115

■ PRESSURE SUSTAINING VALVES

Model name	End connection	Size	Applicable pressure(MPa)	Applicable fluid	Materials		Page
					Body	Trim	
MD-20W, 20H	Flanged	15~80(½″~3″)	0.05~0.7	Water or hot water	Cast iron	Cast bronze & Stainless steel & Synthetic rubber	104
		100~150(4″~6″)	0.05~0.5				

■ DIFFERENTIAL PRESSURE REGULATING VALVES

Model name	End connection	Size	Applicable pressure(MPa)	Applicable fluid	Materials		Page
					Body	Trim	
FD-2W, 2H	Flanged	15~80(½″~3″)	0.05~0.7	Water or hot water	Cast iron	Cast bronze & Stainless steel & Synthetic rubber	105
		100~150(4″~6″)	0.05~0.5				

MD-14 Type Series Primary Pressure Regulating Valve (for Water Air or Oil)

Pump Relief, Pressure Tank/Piping, etc.

High-performance relief valve that can respond to load change, relieve excessive pressure, and maintain the pressure of machines or piping at a constant level. For example, in the case of continuously operating pump, the discharge pressure will change when load changes, but by installing MD-14 type primary pressure regulating valve in bypass circuit, the valve can relieve excessive pressure and regulate discharge pressure at a certain level. It can also be used as the relief valve for pressure tank or piping.



MD-14W,14H Type



Special order item
(with pressure gauge)

FEATURES

- Can be used as pump relief valve. The structure is designed with considerations paid on hunting and vibration, thus allows for stable operation.
- Suitable for being used as the relief valve for pressure tank or piping.
- Piston-type balancing structure, with little change of discharge pressure when outlet pressure changes.
- The valve can be dismantled from upper side, thus allows easy maintenance.
- MD-14CN Type with nylon coating is highly rust resistant.

SPECIFICATIONS

Type	Standard	Hot water & oil	Nylon coating
Model name	MD-14W	MD-14H	MD-14CN
Code name	MD14W-B☐	MD14H-B☐	MD14CN-B☐
	※ L, M or H for adjustable primary pressure is required in ☐.		
Size	15~150(½″~6″)		20~150(¾″~6″)
Applicable fluid	Water & air*1.	Oils not corrosive, kerosene, lubricant, heavy oil A & B, & hot water	Water & Hot water
Fluid temperature	5~60℃	5~90℃	5~60℃
Adjustable primary pressure*2.	Size 15~80mm L:0.05~0.35MPa, M(H for MD-14CN):0.3~0.7MPa Size 100~150mm L:0.05~0.35MPa, M(H for MD-14CN):0.3~0.5MPa		
Fluid viscosity	—	Max. 800cSt	—
End connection	Flanged JIS 10KRF		
Materials	Body(Cast iron), Trim(Cast bronze and Stainless steel), Disc & diaphragm(Synthetic rubber)		
Painting or coating for Body	Interior:Epoxy resin	Interior:Rust proof oil	Nylon 11 coating
Valve body pressure test	Hydraulic 1.5MPa		Hydraulic 1.75MPa

*1. The rubber parts of the product may deteriorate within relatively short time if the product is used in dry air compression system consisting of oil-free compressor(turbo compressor or displacement compressor(oil-free rotary type)). Please contact our agent in your area if you need to use the product in such system.
*2. The valve with a primary pressure regulating range of 0.65~1.0MPa for available size of 80mm or smaller or a primary pressure regulating range of 0.45~0.8MPa for a valve size of 100mm or bigger is also available upon your request.
*3. The valve with a pressure gauge connection hole (screwed JIS Rc¼″) drilled in the valve body or with a pressure gauge installed in this hole is available upon your request.

DIMENSIONS

(mm)

Size	L	A	G	H	Cv value	Mass(kg)
15(½″)	156	142	65	256	1	10
20(¾″)	160	142	65	256	2	10
25(1″)	160	142	65	257	3.5	10.5
32(1¼″)	180	174	76	332	5.5	17
40(1½″)	180	174	76	333	8	17.5
50(2″)	190	174	81	341	14	19
65(2½″)	230	218	95	434	22	37
80(3″)	250	218	100	439	32	40
100(4″)	300	250	125	490	48	67
125(5″)	370	340	150	640	75	112
150(6″)	400	340	165	655	108	150

Flange code JIS 10KRF

CONSTRUCTION

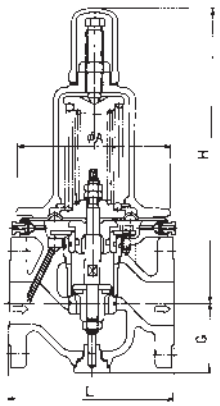

Size 15~80mm

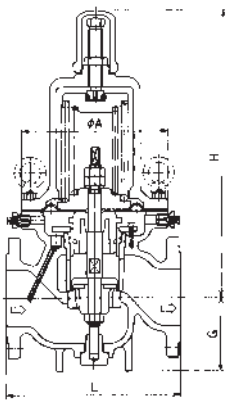

Size 100~150mm

Construction is a bit different according to sizes.

WVM-02 Type Series Primary Pressure Regulating Valve (for Water)

for Pump Relief, Pressure Tank/Piping, etc. Pilot Type (large capacity)

Large capacity primary pressure regulating valve that can respond to change of load and relieve excessive pressure in air-conditioner, hygiene equipment, fire protection devices, and maintain primary pressure at a certain level.



FEATURES

- Needle valve opening (sensing adjustment) can respond to state of operation and allow for easy, stable operation.
- Disc, seat, and pilot operating part can be easily dismantled, thus allows easy adjustment, repair, and replacement of parts.
- Lift limitation device limits overflow.
- Disc, seat, and pilot operating part can be installed vertically or horizontally onto piping (see Note), thus allow for piping according to available space.

  Note: In the case of horizontal piping, the pilot piping should be at the upper side.

SPECIFICATIONS

Type		Standard		Nylon coating
Model name		WVM-02		WVM-02CN
Code name		**WVM02-B☐**	**WVM02-L☐**	**WVM02CN-B☐**
		※ L(low press.) or M (high press.) for adjustable primary pressure is required in ☐.		
Size		50~400(2″~16″)	40~200(1½″~8″)	80~200(3″~8″)
Applicable fluid		Water & hot water		
Fluid temperature		5~60℃		
Adjustable primary pressure		Max.1.0MPa*1.		Max.1.0MPa
Adjustable primary pressure		**Size 40~200mm L:0.05~0.35MPa, M:0.3~1.0MPa*2. Size 250~400mm L:0.05~0.35MPa, M:0.3~0.7MPa**		
Blowdown pressure		Set pressure adjustable range 0.05~0.35MPa:Set pressure×20% or less(min. within 0.03MPa) Set pressure adjustable range 0.3~0.7, 0.3~1.0, 0.3~1.6MPa:Set pressure×15% or less		
Accumulation		Set pressure×10% or less(min. within 0.03MPa)		
End connection		Flanged JIS 10KRF*1		Flanged JIS 10KRF
Materials	**Body**	**Cast iron**	**Ductile cast iron**	Cast iron
	Trim	Disc & diaphragm(Synthetic rubber), Seat ring(Cast bronze)		
Painting or coating for Body		Interior:Epoxy resin		Nylon 11 coating
Valve body pressure test		Hydraulic 1.5MPa		Hydraulic 1.75MPa
Installation		Vertical and horizontal(For size 250mm and bigger:Install valve vertically on the horizontal piping)		

∗1. Adjustable primary pressure Max. 1.6MPa(0.5~1.6MPa) with Flanged JIS 16KRF for sizes 200mm or smaller are available upon your request.
∗2. For size 40 and 50mm, adjustable primary pressure range is 0.5~1.0MPa. Code name:WVM02-B(Cast iron body), WVM02-L(Ductile cast iron body)
∗3.The valve model WVM-02PN Type with epoxy resin painted inside and outside of the valve body(Cast iron body material, sizes 80~200mm)is available upon your reguest.
∗4. Valve with pressure gauge is also available upon your request.
∗5. Refer to Page 101 for valve sizing and Page 111 for example of installation in a pipe line.

DIMENSIONS (Body: Cast iron)

(mm)

Size	L	G	H	H_1	E	E_1	F	Cv value	Mass(kg)
40(1½″)	260	80	345	230	93	115	216	18	23.5
50(2″)	270	85	345	230	93	115	216	32	26.5
65(2½″)	340	100	346	261	117	136	145	38	43
80(3″)	350	110	346	261	117	136	145	54	43
100(4″)	400	130	372	300	130	136	145	96	60
125(5″)	440	140	403	371	145	136	145	150	70
150(6″)	500	165	436	416	173	136	145	216	125
200(8″)	600	200	487	522	218	136	145	384	200
250(10″)	720	240	490	560	295	420	—	600	470
300(12″)	820	280	540	620	328	430	—	864	524
400(16″)	1040	370	690	800	440	520	—	1536	1400

∗1. JIS10K:Flanged code JIS 10KRF
∗2. Please contact our local agent for the dimensions of the main valve of Ductile cast iron or Flanged JIS 16K.
∗3. Valve body material of size 40mm is Ductile cast iron only.

CONSTRUCTION

Size 80~200mm

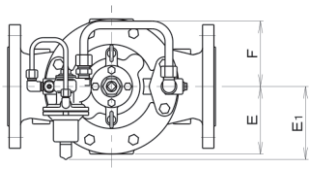

Note: The direction of size 40・50mm pilot valve is different from the direction shown in the figure.

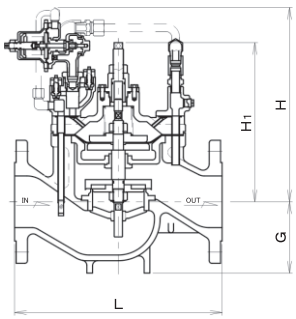

Size 250~400mm

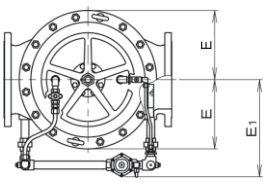

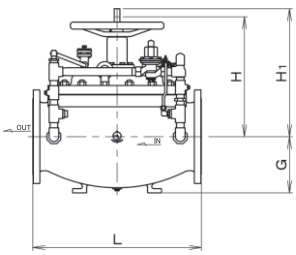

Construction is a bit different for applicable primary pressure 1.6MPa. Size 40・50mm.

SIZE SELECTION CHART (for Liquids)

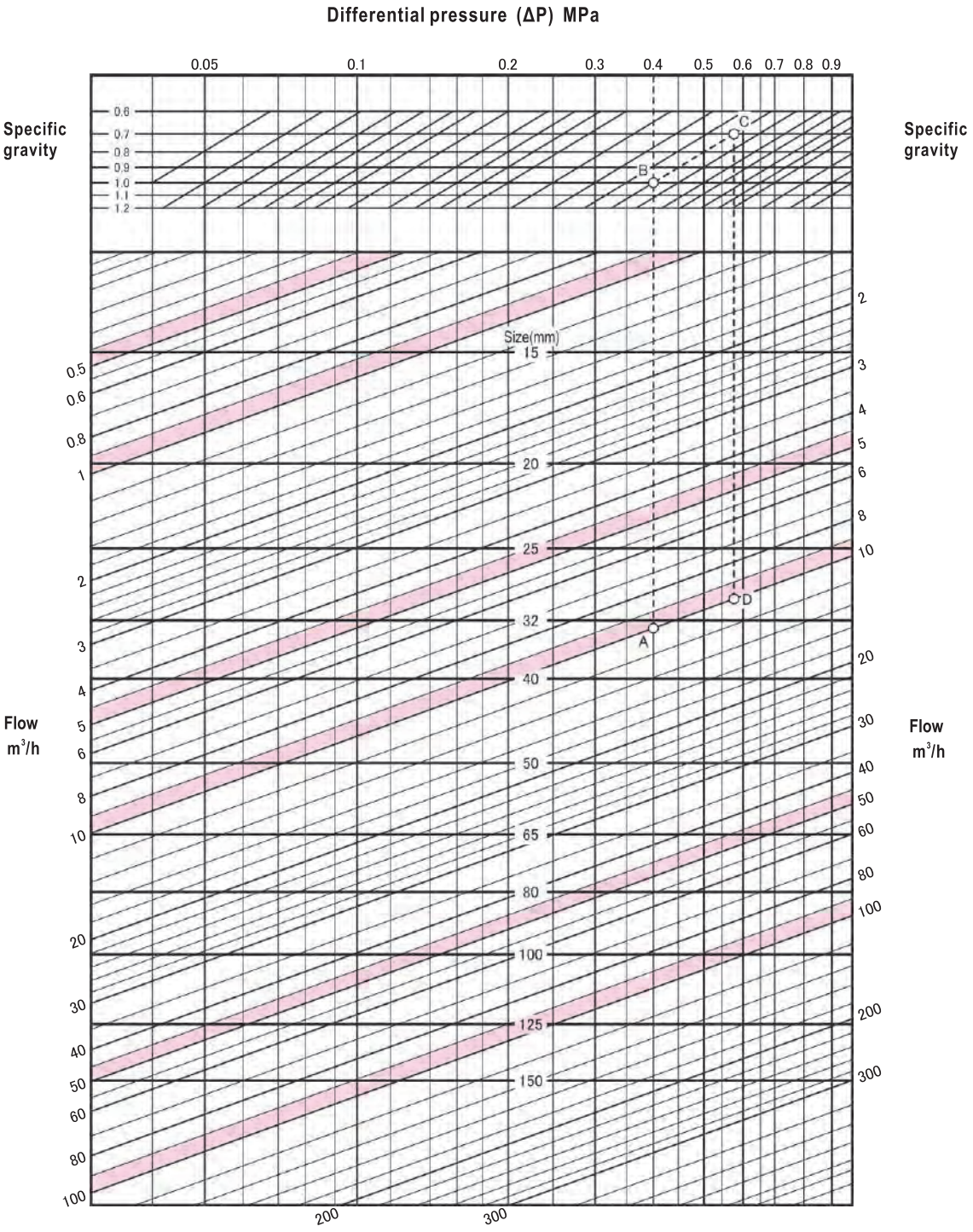

● HOW TO USE THE CHART

Where,
Primary set pressure: 0.5MPa
Back pressure: 0.1MPa
Specific gravity: 1 (water)
Flow rate: 10m³/h.
The differential pressure (ΔP) is 0.5−0.1=0.4MPa

Find out the intersection point A between the 0.4MPa differential pressure (ΔP) line and the 10m³/h flow line.

Since point A is between the lines nominal diameter size 32mm and 40mm select, choose the larger one, 40mm.

And here by the same conditions except the specific gravity is 0.7, find out the intersection point B between the 0.4MPa differential pressure (ΔP) line and the 1.0 specific gravity line.

Move from point B on the 0.7 specific gravity line parallelly to reach point C. Now draw a vertical line from point C until it intersects with the 10m³/h flow line. The intersection point is named D. Since point D is located between the lines nominal diameter size 25mm and 32mm select, choose the larger one,32mm.

DATA/WV Type Regulating Valve (for Water or Hot Water)

SIZE SELECTION CHART (for Water)

■ VELOCITY RATE LINE CHART ■ SIZE SELECTION CHART

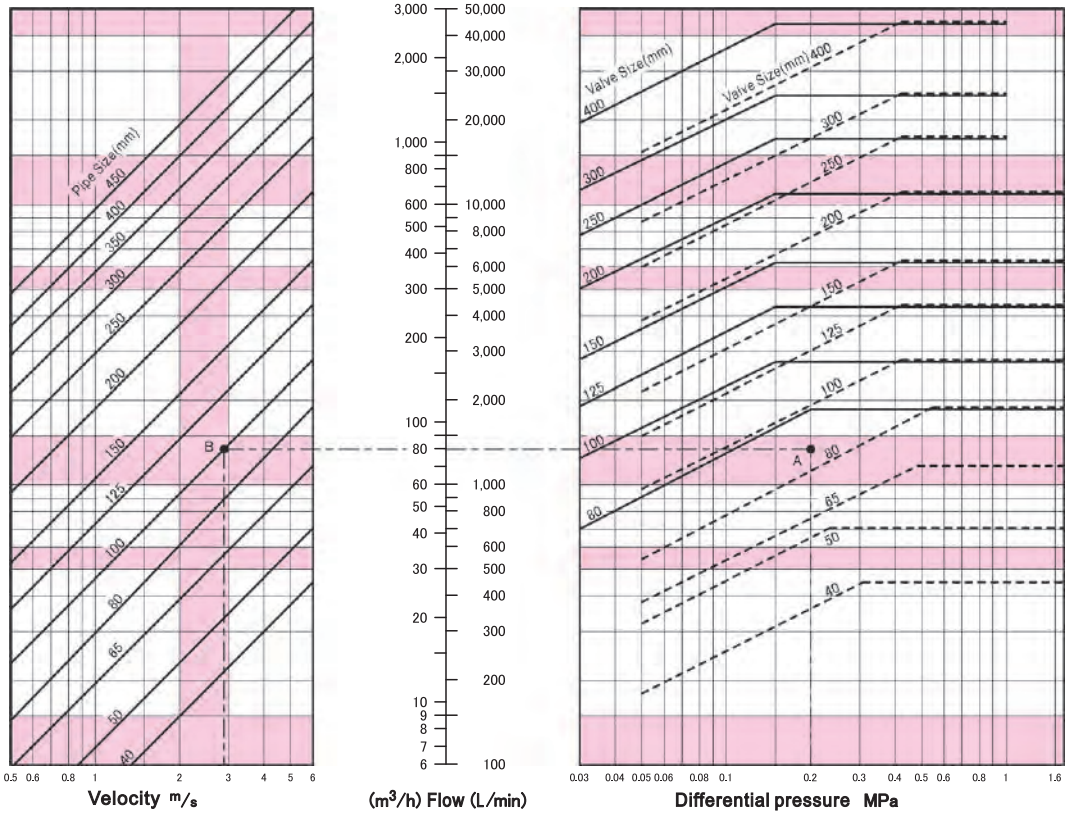

● **PRODUCTS WHOSE SIZES CAN BE DETERMINED**
------- (dashed line) in the size selection chart
Pressure reducing valve WVR-02 Type, Primary pressure regulating valve WVM-02 Type.

● **VALVES APPLICABLE TO**
——— (solid line) in size selection chart
Solenoid valve WVE-02 Type, Level control valve WVL-02 Type.

Note 1: In the size selection chart, the horizontal position of the valve size line represents the maximum flow.
Note 2: Use velocity line of less than 3m/s in velocity line chart with obtained pipe size, if not any special case.
Note 3: Size 40~65mm are for WVR and WVM types only.
Note 4: For sizes 40,50mm, in case of the larger differential pressure,please contact our local agent in your area.

● HOW TO USE THE CHART

Example: Select the size of valve for the following conditions:
Primary pressure: 0.5MPa; Secondary pressure: 0.3MPa; Flow: 80m³/h
1.Calculate differential pressure between inlet and outlet of valve: 0.5−0.3=0.2MPa
2.Follow the 80m³/h flow line horizontally until it intersects with the 0.2MPa differential pressure line. The intersection point is named A.
3.Since point A is between the lines representing size 80mm and 100mm, select the larger size, which is size 100mm.

● CONFIRMING PIPE FLOW RATE

1. Assume the pipe and valve are of the same diameter. Follow the 80m³/h flow line horizontally until it intersects with the 100mm size line to obtain cross point B.
2. Draw a vertical line from point B and find out the pipe flow rate 2.8m/s.
3. Since the flow rate is less than 3m/s, the pipe size should be size 100mm. If flow rate is larger than 3m/s, select a larger size to make the flow rate less than 3m/s.

● REFERENCE

■To select the size for pressure reducing valve or primary pressure regulating valve with considering dynamic water pressure:
For pressure reducing valve, add the largest offset pressure to the secondary pressure. For primary pressure regulating valve, deduct the minimum accumulation from the primary pressure. The size can be determined using the differential pressure between primary and secondary of valve.

●Pressure reducing valve
Find out the maximum offset pressure 0.1MPa from the specifications. The differential pressure is 0.5−(0.3+0.1)=0.1MPa. Use the method described in the example in “HOW TO USE THE CHART” to select the size.

●Primary pressure regulating valve
Find out the minimum accumulation 0.03MPa from specifications. The differential pressure is (0.5−0.03)−0.3=0.17MPa. Use the method described in the example in “HOW TO USE THE CHART” to select the size.

MD-35F, 37F Type Primary Pressure Regulating Valve (for Water, Hot water, Air or Oil)

Multi-purpose, Stainless Steel

Durable products for a variety of applications such as drug solution and clean fluid or gas. Sealed structure ensures no leakage of fluid



MD-35F Type



MD-37F Type

FEATURES

- Highly precise adjustment of pressure of large volume fluid.
- Pressure balancing structure eliminates influence on discharge pressure due to change of outlet pressure.
- The product can be dismantled from top to bottom, thus allows easy maintenance.
- Mounting in all orientations.
- Inlet side pressure gauge can be installed on the main body.
- 50% lighter than conventional cast iron products (based on VENN data).

SPECIFICATIONS

Type		Liquid-contacting parts made of stainless steel		Liquid-contacting parts and spring case made of stainless steel
Model name		MD-35F		MD-37F
Code name		**MD35F-D□**		**MD37F-D□**
		※ L (low press.) M(middle press.) or H (high press.) for adjustable primary pressure is required in □.		
Size		25~50(1″~2″)	65~100(2 ½″~4″)	25~50(1″~2″)
Applicable fluid		Water, hot water, oils, non-corrosive liquids, air*1, and inert gases		
Fluid temperature		5~90°C		
Fluid viscosity		Max. 700 cSt		
Adjustable primary pressure		**L:0.05~0.35MPa M:0.3~0.6MPa H:0.6~0.8MPa**	**L:0.05~0.35MPa M:0.3~0.6MPa**	**L:0.05~0.35MPa M:0.3~0.6MPa**
Blowdown pressure		Set pressure × 10% or less (min. within 0.02 MPa)		
Minimum pressure differential across the disc		0.05 MPa		
Leakage allowance		Nil (Confirm at pressure gauge)		
End connection		Flanged JIS 10K FF		
Materials	Body	Stainless steel		
	Trim	Disc&seat(Stainless steel), Diaphragm&disc(Synthetic rubber)		
	Spring case	Cast zinc	Cast iron	Stainless steel
Valve body pressure test		Hydraulic 1.5 MPa		

* 1. The rubber parts of the product may deteriorate within relatively short time if the product is used in dry air compression system consisting of oil-free compressor (turbo compressor or displacement compressor (oil-free rotary type)). Please contact our agent in your area if you need to use the product in such system.
* 2. To leave sufficient space for maintenance, please select a product with nominal diameter less than 80mm if the product is to be mounted on vertical pipe. (Product with nominal diameter 100mm should be mounted on horizontal pipe uprightly.)
* 3. Products with pressure gauge at the primary side only are also available. (The maximum scale of pressure meter is set pressure adjustment range L (0.6 MPa), M and H (1.6 MPa).)

CONSTRUCTION

MD-35F Type

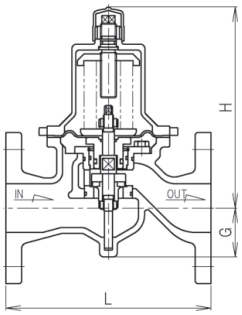

MD-37F Type

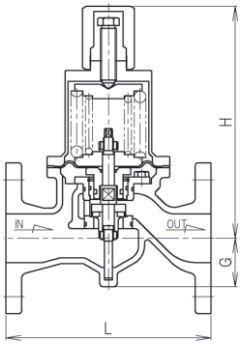

DIMENSIONS

MD-35F Type

(mm)

Size	L	G	H	Mass(kg)
25(1″)	160	41	141	5.1
32(1 ¼″)	160	50	187	7.2
40(1 ½″)	160	50	187	7.8
50(2″)	210	50	206	12
65(2 ½″)	215	70	280	20
80(3″)	260	70	285	23
100(4″)	300	78	345	36

Flange code JIS 10KFF

MD-37F Type

(mm)

Size	L	G	H	Mass(kg)
25(1″)	160	41	195	6.1
32(1 ¼″)	160	50	245	9.2
40(1 ½″)	160	50	245	9.4
50(2″)	210	50	320	15

Flange code JIS 10KFF

DATA/MD-35F, 37F Type Primary Pressure Regulating Valve (for Water, Hot water, Air or Oil)

■ FLOW CHARACTERISTICS

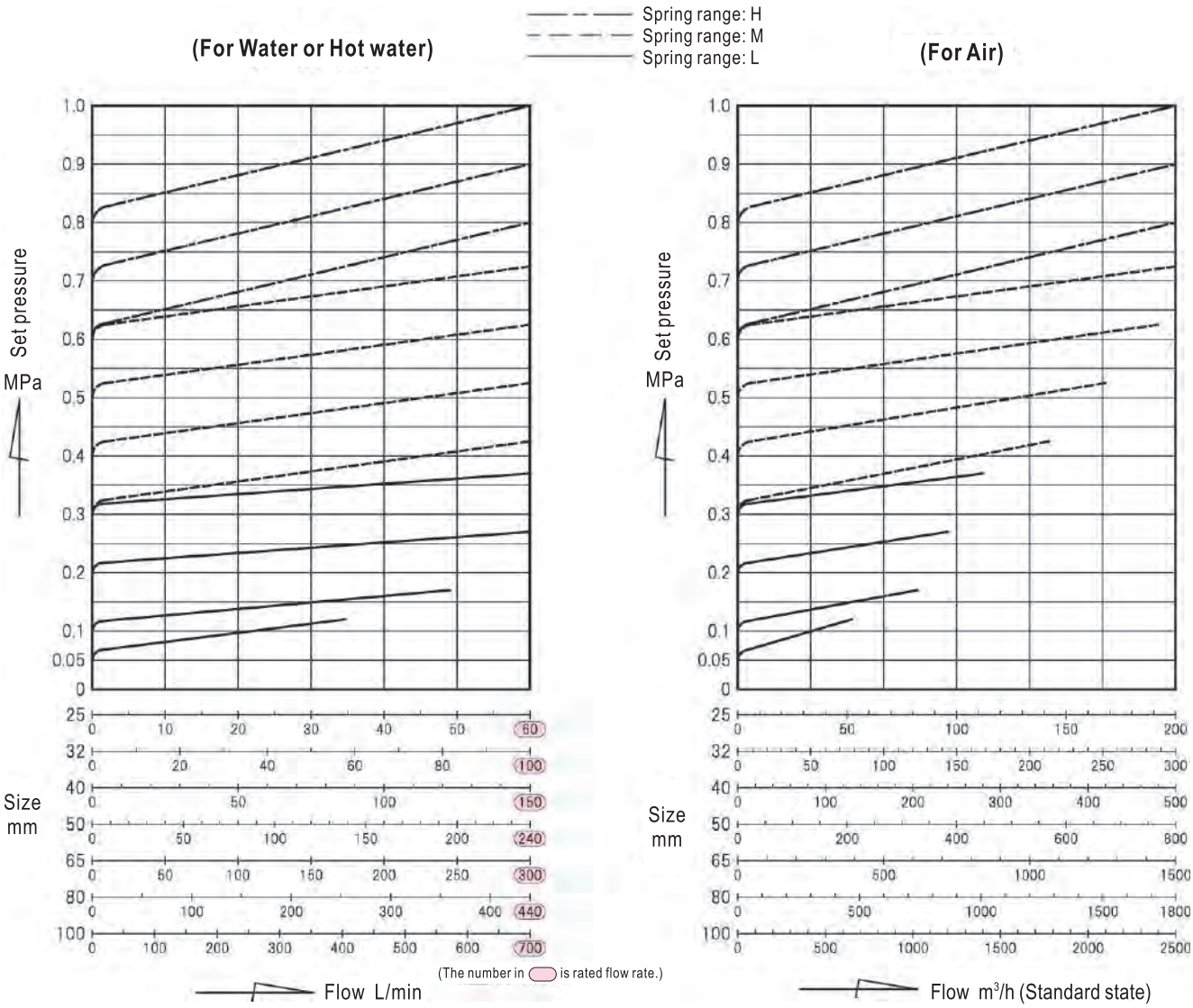

The flow rate of liquid with specific gravity that is different from water should be converted into water flow rate.

$$\text{Converted water flow rate} = \text{Liquid flow rate} \times \sqrt{G}$$

G is the specific gravity of the liquid. (See Page 279.)

The flow rate of gas with specific gravity that is different from air should be converted into air flow rate.

$$\text{Converted air flow rate} = \text{Gas flow rate} \times \sqrt{G}$$

$$= \text{Gas flow rate} \times \sqrt{\frac{M}{28.96}}$$

G is the specific gravity of gas.
M is the molecular weight of gas.
(See Page 279.)

MD-20W, 20H Type Pressure Sustaining Valve (for Water or Hot water)

for Air Conditioner, Air Conditioning Equipment, etc.

Use the valve to prevent water from falling in return pipe in open circuit for air conditioner or air conditioning equipments in high buildings.

When pump stops

The valve disc closes rapidly to prevent water level in from falling return pipe.

When pump starts

With no accumulation of air. Prevent the occurrence of noise and vibration.

When pump is working

Maintain proper pressure in pipe.



FEATURES

- Good response to change of pressure. The valve closes rapidly when pump stops.

SPECIFICATIONS

Model name	MD-20W	MD-20H
Code name	**MD20W-B ☐**	**MD20H-B ☐**
	※ L(low press.) or H (high press.) for adjustable primary pressure is required in ☐.	
Applicable fluid	Water	Hot water
Fluid temperature	5~60℃	5~90℃
Adjustable primary pressure	**Size 15~80mm L:0.05~0.35MPa, H:0.3~0.7MPa Size 100~150mm L:0.05~0.35MPa, H:0.3~0.5MPa**	
End connection	Flanged JIS 10KRF	
Materials	Body(Cast iron), Trim(Cast bronze and Stainless steel), Diaphragm & disc(Synthetic rubber)	
Painting	Interior:Epoxy resin	Interior:Rust proof oil
Valve body pressure test	Hydraulic 1.5MPa	

* Refer to Page 109 for size selection for pressure sustaining valve and Page 100 for valve sizing.

DIMENSIONS

(mm)

Size	L	A	G	H	Cv value	Mass(kg)
15(½″)	156	142	65	256	1	10
20(¾″)	160	142	65	256	2	10
25(1″)	160	142	65	257	3.5	10.5
32(1¼″)	180	174	76	333	5.5	17
40(1½″)	180	174	76	332	8	17.5
50(2″)	190	174	81	341	14	19
65(2½″)	230	218	95	434	22	37
80(3″)	250	218	100	439	32	40
100(4″)	300	250	125	490	48	67
125(5″)	370	340	150	640	75	112
150(6″)	400	340	165	655	108	150

Flange code JIS 10KRF

CONSTRUCTION

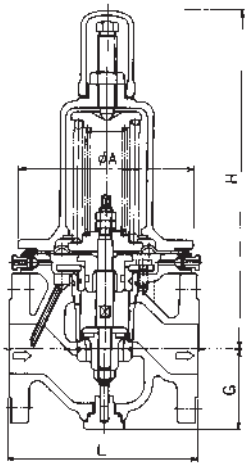

Size 15~80mm

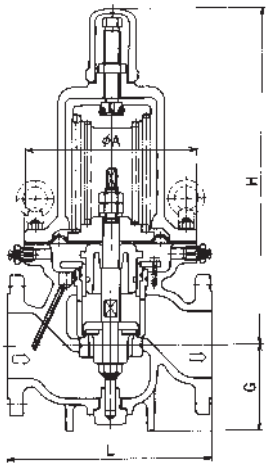

Size 100~150mm

Construction is a bit different depending on sizes.

FD-2W, 2H Type Differential Pressure Regulating Valve (for Water or Hot water)

for Air Conditioner, Air Conditioning Equipment, etc.

These products can be used as pump relief valve in closed circuit of air conditioning equipments in high buildings.
In open circuit, primary pressure regulating valve is used for the relief valve of pump. In closed circuit, however, since it is required to maintain operating at a constant flow for the pump, no matter how load changes, differential pressure regulating valve should be used.



FEATURES

- Can be used as pump relief valve in closed circuit.

SPECIFICATIONS

Model name	FD-2W	FD-2H
Code name	**FD2W-B ☐**	**FD2H-B ☐**
	※ L(low press.) or H (high press.) for adjustable primary pressure is required in ☐.	
Applicable fluid	Water	Hot water
Fluid temperature	5~60℃	5~90℃
Adjustable primary pressure	**Size 15~80mm L:0.05~0.35MPa, H:0.3~0.7MPa Size 100~150mm L:0.05~0.35MPa, H:0.3~0.5MPa**	
End connection	Flanged JIS 10KRF	
Materials	Body(Cast iron), Trim(Cast bronze and Stainless steel), Diaphragm & disc(Synthetic rubber)	
Painting	Interior:Epoxy resin	Interior:Rust proof oil
Valve body pressure test	Hydraulic 1.5MPa	

* Refer to Page 108 for size selection of differential pressure regulating valve and Page 100 for valve sizing.

DIMENSIONS

(mm)

Size	L	A	G	H	a	b	Cv value	Mass(kg)
15(½″)	156	142	65	256	137	40	1	10
20(¾″)	160	142	65	256	137	40	2	10
25(1″)	160	142	65	257	137	40	3.5	10.5
32(1¼″)	180	174	76	332	170	50	5.5	17
40(1½″)	180	174	76	333	170	50	8	17.5
50(2″)	190	174	81	341	177	50	14	19
65(2½″)	230	218	95	434	214	64	22	37
80(3″)	250	218	100	439	219	64	32	40
100(4″)	300	250	125	490	281	78	48	67
125(5″)	370	340	150	640	356	104	75	112
150(6″)	400	340	165	655	371	104	108	150

Flange code JIS 10KRF

CONSTRUCTION

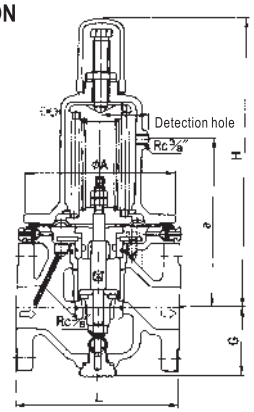

Size 15~80mm

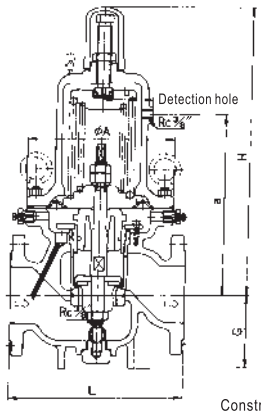

Size 100~150mm

Construction is a bit different depending on sizes.

Note: The detection hole (JIS Rc⅜″) should be pipe connected to the detection part of the outlet side.

PIPING EXAMPLE

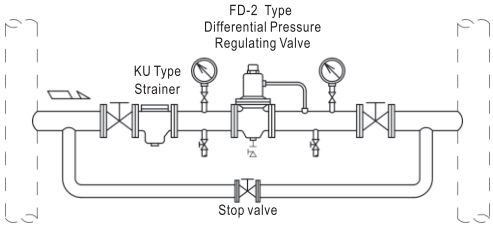

Note: It is recommended to use a 40-mesh strainer.

Types of Circuit Valve

■ OVERVIEW

Circuit valves can be divided into three types: Primary pressure regulating valve, Pressure sustaining valve and Differential pressure regulating valve. These valves are used as pressure regulating valves in air conditioning equipments in high buildings.



Primary pressure regulating valve (Direct operated type MD-14 Type)

Used as bypass valve for pump (pump relief valve), Primary pressure regulating valve can respond to change of pump load and discharge excessive pressure and maintain a constant discharge pressure.
Large capacity type WVM-02 Type is also available.



Pressure sustaining valve (Direct operated type MD-20 Type)

This valve can prevent water from falling in return pipe of open circuit for air conditioning system in high buildings that may occur when pump stops.

By installing pressure sustaining valve in return pipe, the valve closes immediately after pump stops. This can prevent decrease of water level and accumulation of air, thus can prevent the occurrence of noise and vibration. In addition, the valve can maintain the primary pressure at a constant level and provide stable pressure condition for normal operation of equipments.



Differential pressure regulating valve (Direct operated type FD-2 Type)

This valve can be used as pump relief valve in closed circuit of air conditioning system in high buildings.

In open circuit, primary pressure regulating valve is used as the relief valve of pump. In closed circuit, however, since it is required to maintain operating at a constant flow, no matter how load changes, differential pressure regulating valve should be used.

Open circuit

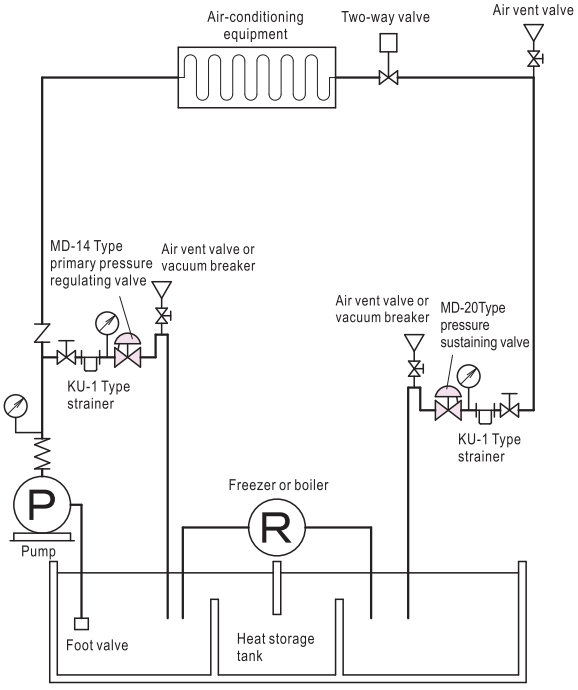

Closed circuit

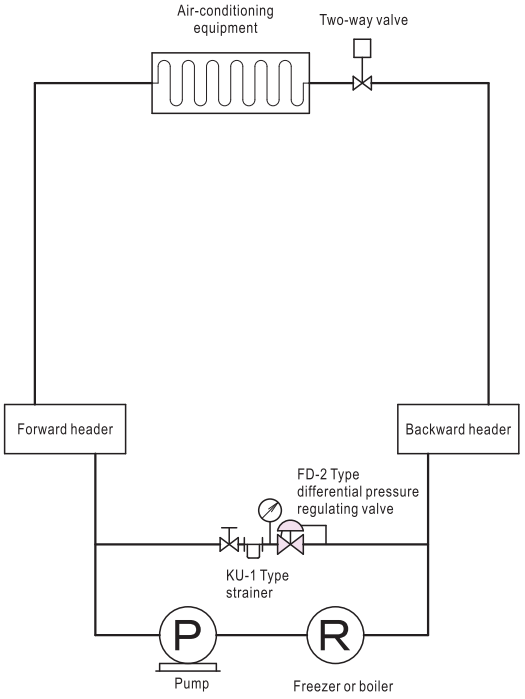

TERMS

- Set pressure (set differential pressure): The pressure at inlet side when primary pressure regulating valve and pressure sustaining valve start (differential pressure regulating valve) start to operate and fluid starts to flow (difference of pressure before and after valve).
- Closing pressure (closing differential pressure): The inlet pressure when primary pressure regulating valve and pressure sustaining valve close (differential pressure regulating valve) and fluid stops (difference of pressure before and after valve).
- Blowdown pressure: Difference of set pressure (set differential pressure) and closing pressure (closing differential pressure).
- Accumulation: The pressure exceeding set pressure (set differential pressure) for acquiring desired discharge (in percentage or pressure unit).
- Capacity rating pressure (capacity rating differential pressure): Standard pressure for deciding rated capacity, which is the pressure at inlet side when pressure reaches a required level, higher than set pressure (set differential pressure), and the fluid keeps on flowing (difference of pressure before and after valve).
- Rated discharge capacity: The maximum flow at capacity rating pressure (capacity rating differential pressure).

Note: The words in parenthesis are applicable to Differential pressure regulating valve.

PRESSURE-FLOW CHARACTERISTICS CHART

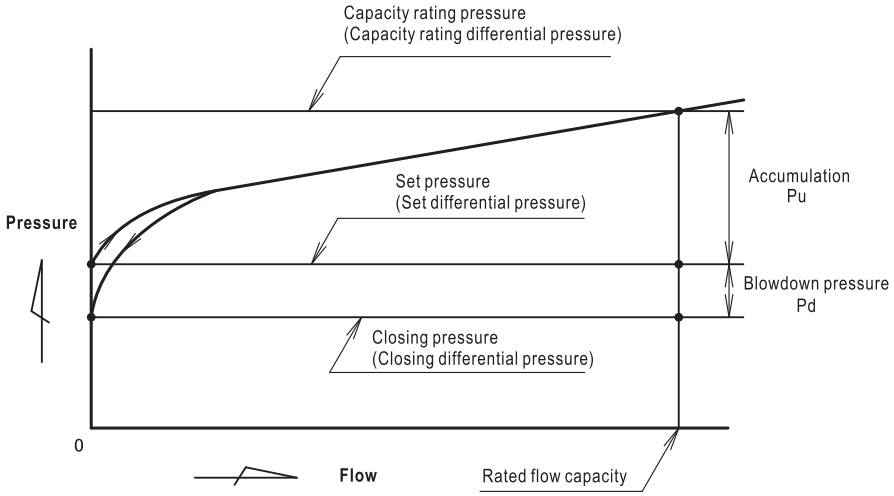

CHARACTERISTICS

Operation mode	Model	Accumulation Pu	Blowdown pressure Pd
Direct operating	MD-14W, 14H, 14CN	≦Max. spring regulating range ×15% (≦20%,in case of size 100mm or larger and spring for 0.5MPa.)	≦Set pressure ×10% (Min. 0.02MPa)
	FD-2W, 2H		
	MD-35F, 37F	See Flow Characteristics Chart, Page 103	
	MD-20W, 20H	See Accumulation Chart, Page 109	≦ 0.04MPa
Pilot operating	WVM-02	≦Set pressure ×10% (Min. 0.03MPa)	Adjusting spring range 0.05~0.35 (0.3)MPa; ≦ set pressure× 20% (Min. 0.03MPa) 0.3~1.0(0.7)MPa and 0.5~1.6MPa; ≦Set pressure ×15%

■ SIZE SELECTION OF PRIMARY PRESSURE REGULATING VALVE

PUMP CHARACTERISTICS CHART

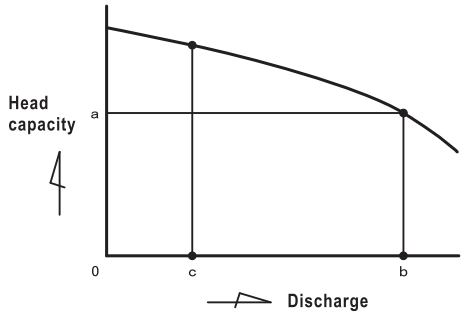

❶ Use the size selection chart to decide the nominal diameter.

❷ When primary pressure and back pressure are not constant, but change within a certain range, use the primary pressure and back pressure that allows for minimum difference between these two pressures to decide the size.

❸ In the case of fluid which viscosity cannot be ignored (e.g. oil), make viscosity correction when deciding size.

❹ If primary pressure regulating valve is used as pump relief valve, the relief volume can be decided using the following method.

The discharge side of the pump is completely closed: in the pump characteristics chart (on the left), find out the relief volume (b) of head capacity (a) that is equivalent to regulating pressure. In this case, b is the relief volume of primary pressure regulating valve.

The discharge side of the pump is not completely closed: The relief volume of primary pressure regulating valve is the difference of(b-c),as c is the minimum flow at normal operation.

■ SIZE SELECTION OF DIFFERENTIAL PRESSURE REGULATING VALVE

Fig.A

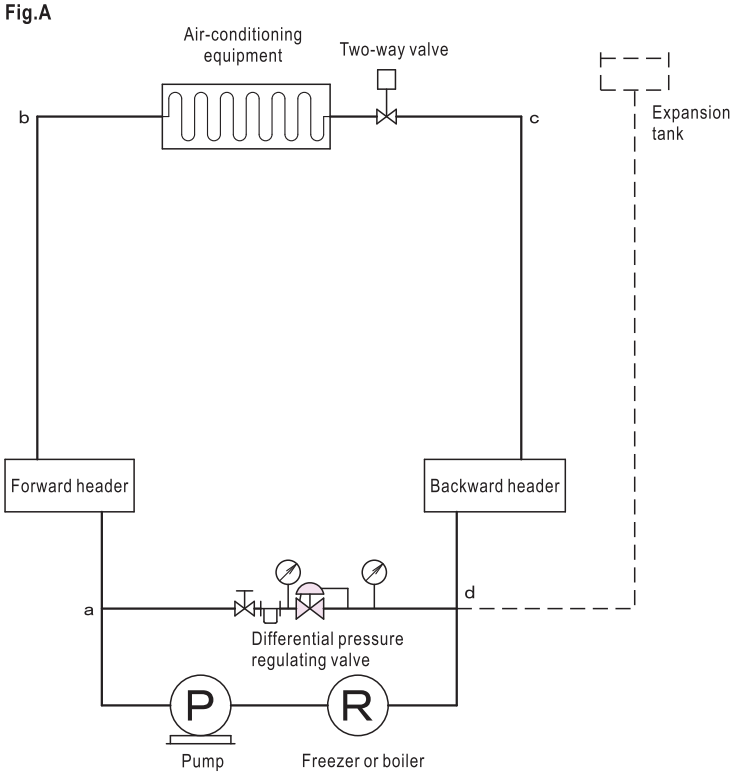

❶ Use the size selection chart in Page 100. If water temperature is higher than 60℃, the size should be large enough to allow additional 10~20% flow.

❷ In Fig.A, the differential pressure before and after valve (ΔP), which is necessary for deciding size, is the total pressure loss between a, b, c, and d.

❸ In stead of differential pressure regulating valve, primary pressure regulating valve can be used if there is expansion tank as shown by dash line in Fig. A. However, the set pressure of spring is different.

For WV Type series, see Page 101.

SIZE SELECTION FOR PRESSURE SUSTAINING VALVE

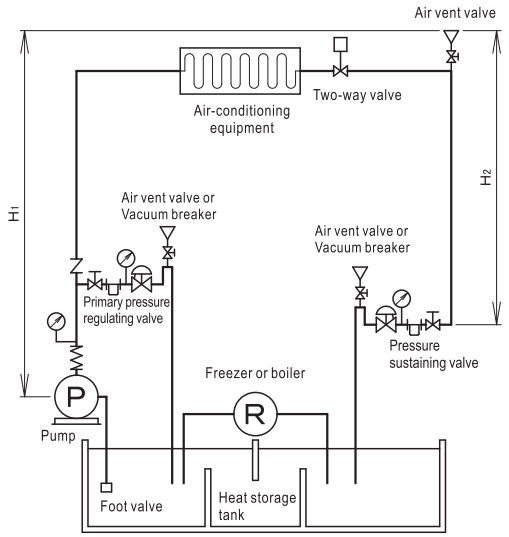

Differential pressure before and after valve: ΔP(MPa)
Pump output pressure at max. flow: P(MPa)
Height from pump to the highest point of piping: H_1(m)
Height from pressure sustaining valve to the highest point of piping: H_2(m)
Piping between pump outlet to pressure sustaining valve
Total resistance of machine and pipe resistance, etc.: W_1(MPa)
Resistance after pressure sustaining valve: W_2(MPa)
Set pressure of pressure sustaining valve: Ps(MPa)
Accumulation of pressure sustaining valve: Pu(MPa)
Blowdown pressure of pressure sustaining valve: Pd(MPa)

CALCULATING METHOD

(see the pressure sustaining valve calculation form in the next page)

Step 1: calculate the differential pressure (ΔP) before and after the valve.

$$\Delta P = P - \frac{0.098(H_1 - H_2)}{10} - (W_1 + W_2)$$

Step 2: calculate set pressure (min.) Ps.

$$Ps = \frac{0.098H_2}{10} + Pd$$

Now check if ΔP is larger than Ps (ΔP >Ps). If not, that means the pump does not have sufficient capacity.

Step 3:Use set pressure (min.) Ps and the size selection chart to decide size and obtain rated flow.

Step 4: Calculate accumulation Pu.
In the case of MD-20 Type:

$$\text{Rated flow \%} = \frac{\text{Required flow}}{\text{Rated flow}} \times 100\%$$

Then calculate accumulation Pu using the accumulation chart.

Step 5: Make sure pump capacity meets the following:

$$P \geqq \frac{0.098H_1}{10} + W_1 + Pu + Pd$$

If not, select a larger size and calculate again. Since the surplus pressure of pump is:

$$P - \left(\frac{0.098H_1}{10} + W_1 + Pu + Pd\right)$$

The actual set pressure should be in the range between the min.set pressure (Ps) to (Ps+surplus pressure of pump).

Note: If water temperature is higher than 60℃, the size should be large enough to allow additional 10~20% flow.

Accumulation Chart for MD-20 Type Pressure Sustaining Valve

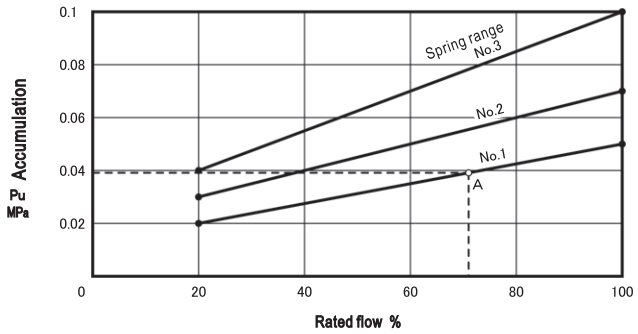

Table of spring range No. for MD-20 TYPE.

No.	Size(mm)	Spring range(MPa)
1	15~50	0.05~0.35
2	15~40	0.3~0.7
	65~150	0.05~0.35
3	50~80	0.3~0.7
	100~150	0.3~0.5

HOW TO USE THE ACCUMULATION CHART

Example: calculation accumulation (Pu) under the following conditions:
Size: 40mm
Pressure differential: 0.1MPa
Flow: 5m^3/h
Since the rated flow is 7m^3/h, as shown in the size selection chart.

$$\text{RatedFlow(\%)} = \frac{5(m^3/h)}{7(m^3/h)} \times 100(\%) = 71\%$$

From point A on No.1 spring range line, accumulation (Pu) is 0.038MPa.

Step 2. Obtaining of blowdown pressure Pd

Model	Pd
MD-20	0.04MPa or less

■ MD-20TYPE CALCULATION SHEET: PRESSURE SUSTAINING VALVE

Customer			
Valve spec.		(Example)	
Discharge pressure of pump at Max. Flow	P(MPa)	0.6MPa	MPa
Flow required	(m^3/h)	42m^3/h	m^3/h
Height from pump to the highest point of pipe	H_1(m)	27m	m
Height from pressure sustaining valve to the highest point of pipe	H_2(m)	26m	m
Total resistance of pipe between pump outlet and pressure sustaining valve, and machine resistance	W_1(MPa)	0.2MPa	MPa
Resistance after pressure sustaining valve	W_2(MPa)	0.01MPa	MPa
Pressure differential before and after valve $\Delta P=P-\frac{0.098(H_1-H_2)}{10}-(W_1+W_2)$	ΔP(MPa)	$\Delta P=0.6-\frac{0.098(27-26)}{10}-(0.2+0.01)$ =0.38 MPa	ΔP= = MPa
Set pressure (Min) $Ps=\frac{0.098H_2}{10}+Pd$ (Pd: blowdown pressure MPa) See Page 109. Make sure ΔP>Ps	Ps(MPa)	$Ps=\frac{0.098\times26}{10}+0.04$ =0.29 MPa ΔP>Ps 0.38>0.29	Ps= = MPa ΔP>Ps >
Use Ps and size selection chart to determine nominal diameter and rated flow. See the chart in Page 100 .		Size: 80 Rated flow: 47 m^3/h	Size: Rated flow: m^3/h
Accumulation Pu Use rated flow % to obtain accumulation (Pu). $\text{Rated flow(\%)}=\frac{\text{Flow required}}{\text{Rated flow}}\times100(\%)$		In case of MD-20 Type Rated flow(%)= $\frac{42}{47}\times100=89\%$ Using the accumulation chart, Pu=0.065 MPa	In case of MD-20 Type Rated flow(%)= Using the accumulation chart, Pu= MPa
Checking pump capacity $P\geq\frac{0.098H_1}{10}+W_1+Pu+Pd$ Surplus pressure of pump $P-(\frac{0.098H_1}{10}+W_1+Pu+Pd)$		$\frac{0.098\times27}{10}+0.2+0.065+0.04$ = 0.570 MPa Since P= 0.6 MPa the requirement is satisfied. The surplus pressure of pump =0.6−0.570 = 0.03 MPa	= = MPa Since P= MPa, the requirement is satisfied. The surplus pressure of pump = = MPa
Range of set pressure Result of selection		Range of set pressure should be 0.29~0.32MPa Model: MD-20 Size: 80 mm Set pressure: 0.32 MPa	Range of set pressure should be ~ MPa Model: Size: mm Set pressure: MPa

Key points for installation

■ PIPING EXAMPLE

Fig.1 Primary pressure regulating valve/pressure sustaining valve (with bypass pipe)

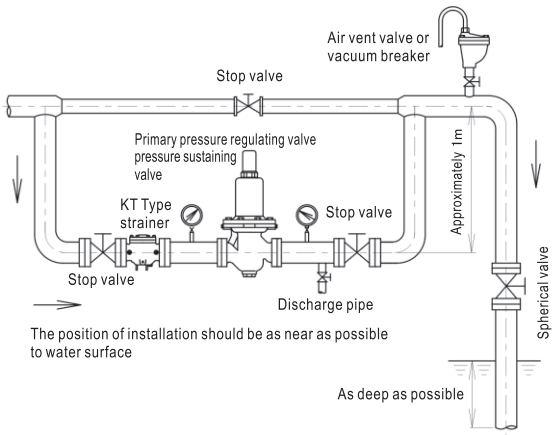

Fig.2 Primary pressure regulating valve/pressure sustaining valve (without bypass pipe)

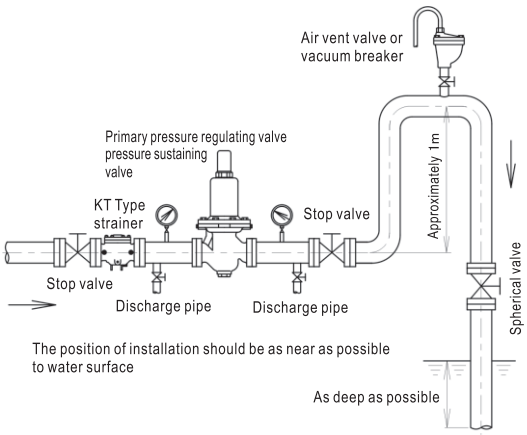

Fig. 3 Differential pressure regulating valve (with bypass pipe)

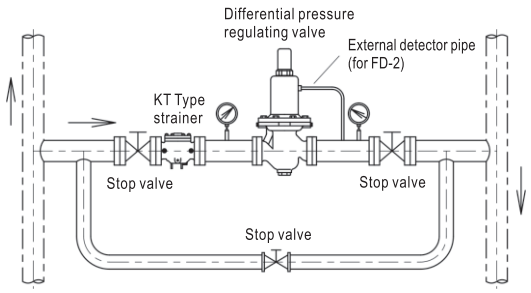

Fig. 4 Differential pressure regulating valve (without bypass pipe)

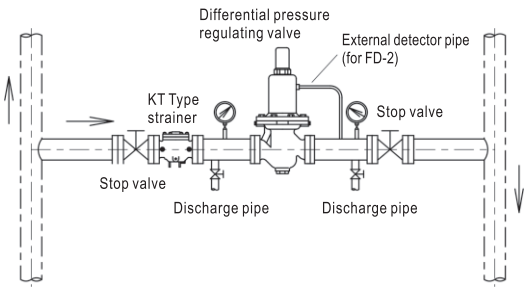

■ KEY POINTS FOR INSTALLATION

1. If not otherwise specified, primary pressure regulating valve should be installed vertically on the horizontal piping.
2. Install strainer at the primary side of the valve.
3. For equipments which operation cannot be stopped, install bypass piping (with stop valve) between primary and secondary sides (see Fig. 1 and 3). If bypass piping is not installed, install blowing stop valve, which is branched from the main pipe and located immediately before the primary side of the product, to allow flushing (see Fig. 2 and 4).
4. In the case of primary pressure regulating valve and pressure sustaining valve that discharge to open tank, the outlet piping of the valve should have a 1m ascending part and then a descending part and be immerged into water. In addition, the top of the ascending pipe should have air vent valve or vacuum breaker.
   ※By installing ascending pipe, air vent valve or vacuum breaker at the outlet side of the valve, it is able to maintain a stable flow and normal functioning of valve (see Fig. 1 and 2).
5. Install stop valve and pressure gauge.
   The pressure gauge should be installed on the primary side in the case of primary pressure regulating valve and pressure sustaining valve, or primary/secondary side in the case of differential pressure regulating valve (see Fig. 1~4).
6. Depending on model of primary pressure regulating valve, there may be external detector (which can detect pressure using a pipe branched from piping). For such model, connect pressure detecting hole and piping with a pipe and install a needle valve on the pipe (to make it possible to adjust the sensibility of primary pressure regulating valve based on the opening degree of needle valve).
   If there is leakage outlet on spring case, install a pipe that leads to liquid discharge tank (see Fig. 5).
7. Leave some space for dissembling and maintenance.
8. Apply appropriate support to product to make sure it does not bear the weight of piping, bending force, or vibration directly.
9. If you think there is possibility of freezing, insulate or discharge the drain.

Fig.5 Piping example: Primary pressure regulating valve with external detector

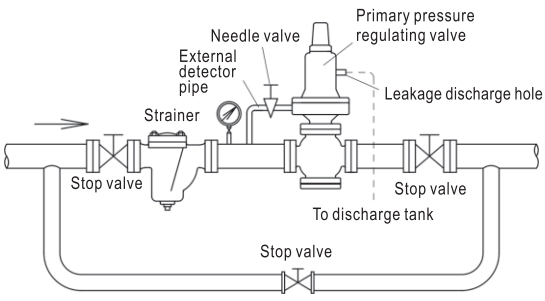

MD-1A Type Primary Pressure Regulating Valve (for Oil or Liquids)

Although developed for regulating high pressure oil, MD-1A Type can also be used as primary pressure regulator for other liquids (mainly be used as pump relief valve).



■ CONSTRUCTION

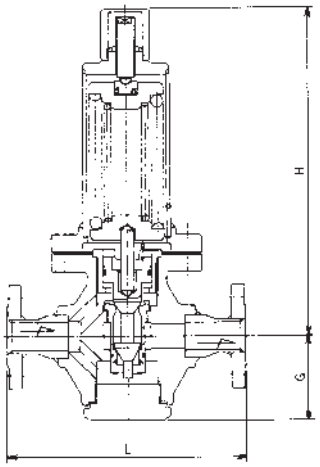

■ VALVE LEAKAGE ALLOWANCE

Size	Valve leakage allowance
15~25mm	150mL/min or less
32~50mm	200mL/min or less

■ SPECIFICATIONS

Model name		MD-1A	
Code name		MD1A-N□	MD1A-D□
		※ L, M or H for adjustable primary pressure is required in □.	
Applicable fluid		Oil & liquids	
Fluid temperature		5~80℃	
Fluid viscosity		Max. 700cSt	
Adjustable primary pressure		L:0.5~1.0MPa, M:1.0~1.5MPa, H:1.5~2.5MPa, S:2.5~3.0MPa	
Blowdown pressure		Set pressure×10% or less	
End connection		Flanged JIS 30KRF*	
Materials	Body	Carbon steel	Stainless steel
	Trim	Stainless steel	
Valve body pressure test		1.5 times of flange rated pressure	

*Flanged JIS 10K, 16K and 20KRF and ASME(ANSI)class 150,300 are available upon your request.

■ DIMENSIONS

(mm)

Size	L	G	H	Cv value	Mass(kg)
15(½″)	260	90	385	3	28
20(¾″)	260	90	385	3	28
25(1″)	260	90	385	3	28
32(1¼″)	310	110	428	10	57
40(1½″)	310	110	428	10	57
50(2″)	310	110	428	10	57

Flange code JIS 30KRF

■ SIZE SELECTION CHART

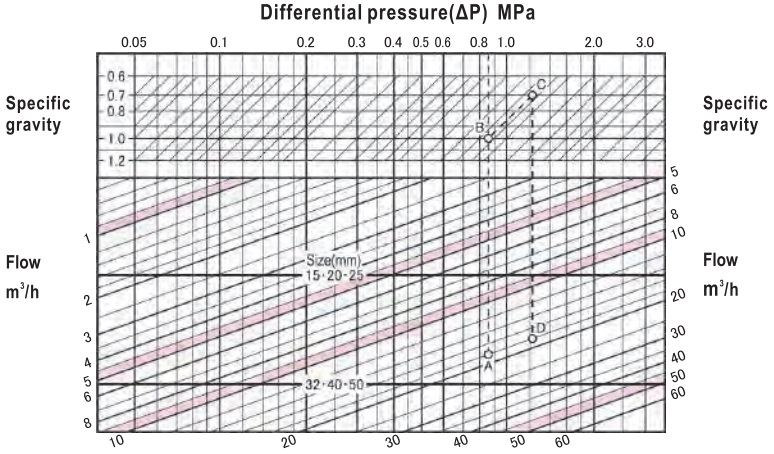

● HOW TO USE THE CHART

Example: Select the size of valve meeting the following requirements.
Set pressure: 0.9MPa
Back pressure: 0.05MPa
Specific gravity: 1 (water)
Flow: 18m³/h
The differential pressure (ΔP) is 0.9−0.05=0.85MPa
Find out the intersection point A between the 0.85MPa differential pressure (ΔP) line and the 18m³/h flow line. Since point A is between the lines representing nominal diameter size15·20·25mm and 32·40·50mm, the nominal diameter should be the larger one, i.e., 32·40·50mm.

In the case other conditions remain the same but the specific gravity is 0.7, find out the intersection point B between the 0.85MPa differential pressure (ΔP) line and the 0.1 specific gravity line. Move from point B on the 0.7 specific gravity line parallelly to reach point C. Now draw a vertical line from point C until it intersects with the 18m³/h flow line. The intersection point is named D. Since point D is located between the lines representing nominal diameter size 15·20·25mm and 32·40·50mm, the nominal diameter should be the larger one, i.e., 32·40·50mm.

■ PIPING EXAMPLE

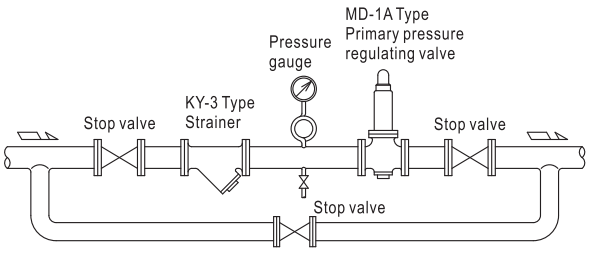

MD-2P Type Primary Pressure Regulating Valve (for Oil or Liquids)

MD-2P Type can be used as oil pressure regulating valve.
In the case of water or hot water, select MD-14 Type series or MD-35F, 37F Type.



SPECIFICATIONS

Model name	MD-2P	
Code name	MD2P-B ☐	MD2P-C ☐
	※ L, M or H for adjustable primary pressure is required in ☐.	
Applicable fluid	Oil & liquids	
Fluid temperature	5~80℃*2.	
Fluid viscosity	Max. 700cSt	
Adjustable primary pressure	Size 20~50mm L:0.05~0.25MPa, M:0.25~0.45MPa, H:0.45~0.7MPa Size 65~150mm L:0.05~0.2MPa, M:0.2~0.5MPa, H:0.5~0.7MPa	
Blowdown pressure	Set pressure × 10% or less (min. within 0.03MPa)	
End connection	Flanged JIS10KFF*3.	
Materials	Body(Cast iron), Disc & seat(Cast bronze)*4.	Body(Cast steel), Disc & seat(Stainless steel)
Valve body pressure test	Hydraulic 1.5MPa	

*1. The inlet pressure can be checked by the external detector.But the internal detector is also available upon request.
*2. For high applicable temperature 5~150℃ is also available upon your request.
*3. Valve body with Flanged JIS 10KRF is also available upon your request.
*4. Disc and seat with stainless steel are also available upon your request.
*5. In case of fuel oil use, select MD-22 Type. Refer to Page 115.

DIMENSIONS

(mm)

Size	L	G	H	A	B	Cv value	Cast iron Mass(kg)	Cast steel Mass(kg)
20(¾″)	170	93	440	77	110.5	2	21	28
25(1″)	170	93	440	77	110.5	3	22	29
32(1¼″)	180	98	445	77	115.5	5	23	31
40(1½″)	180	98	445	77	115.5	6	24	31
50(2″)	180	108	450	77	125.5	15	26	33
65(2½″)	215	125	555	100	153.5	23	41	56
80(3″)	260	140	565	100	162.5	30	48	70
100(4″)	300	165	590	100	189.5	40	67	86
125(5″)	360	195	620	100	218.5	50	90	115
150(6″)	382	230	655	100	250.5	60	126	177

Flange code JIS 10KFF

VALVE LEAKAGE ALLOWANCE

Size	Valve leakage allowance
20~32mm	0.3 L/min or less
40~65mm	0.8 L/min or less
80~100mm	1.4 L/min or less
125~150mm	2.2 L/min or less

CONSTRUCTION

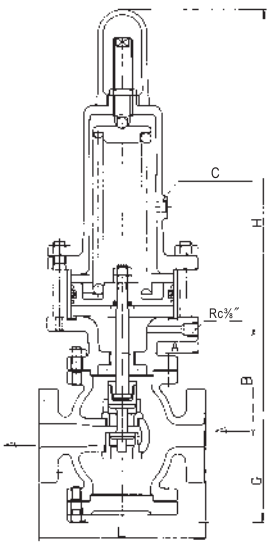

Valves with different sizes may have different structures.
C: leakage discharge hole (JIS Rc⅜″)

PIPING EXAMPLE

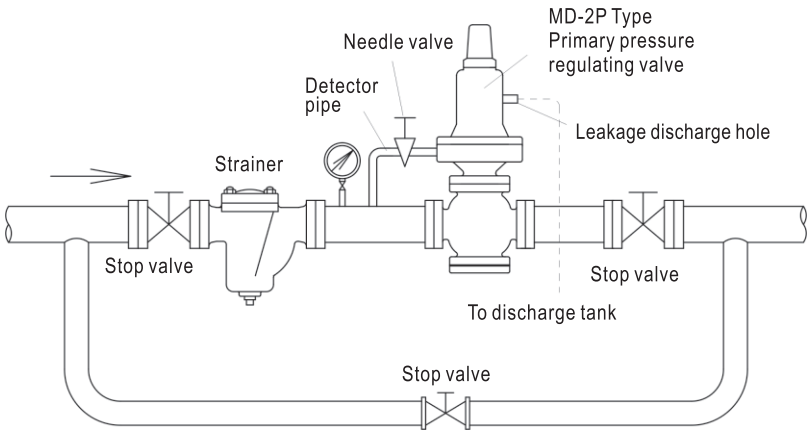

DATA/MD-2P Type Primary Pressure Regulating Valve (for Oil or Liquids)

SIZE SELECTION CHART (for Liquids)

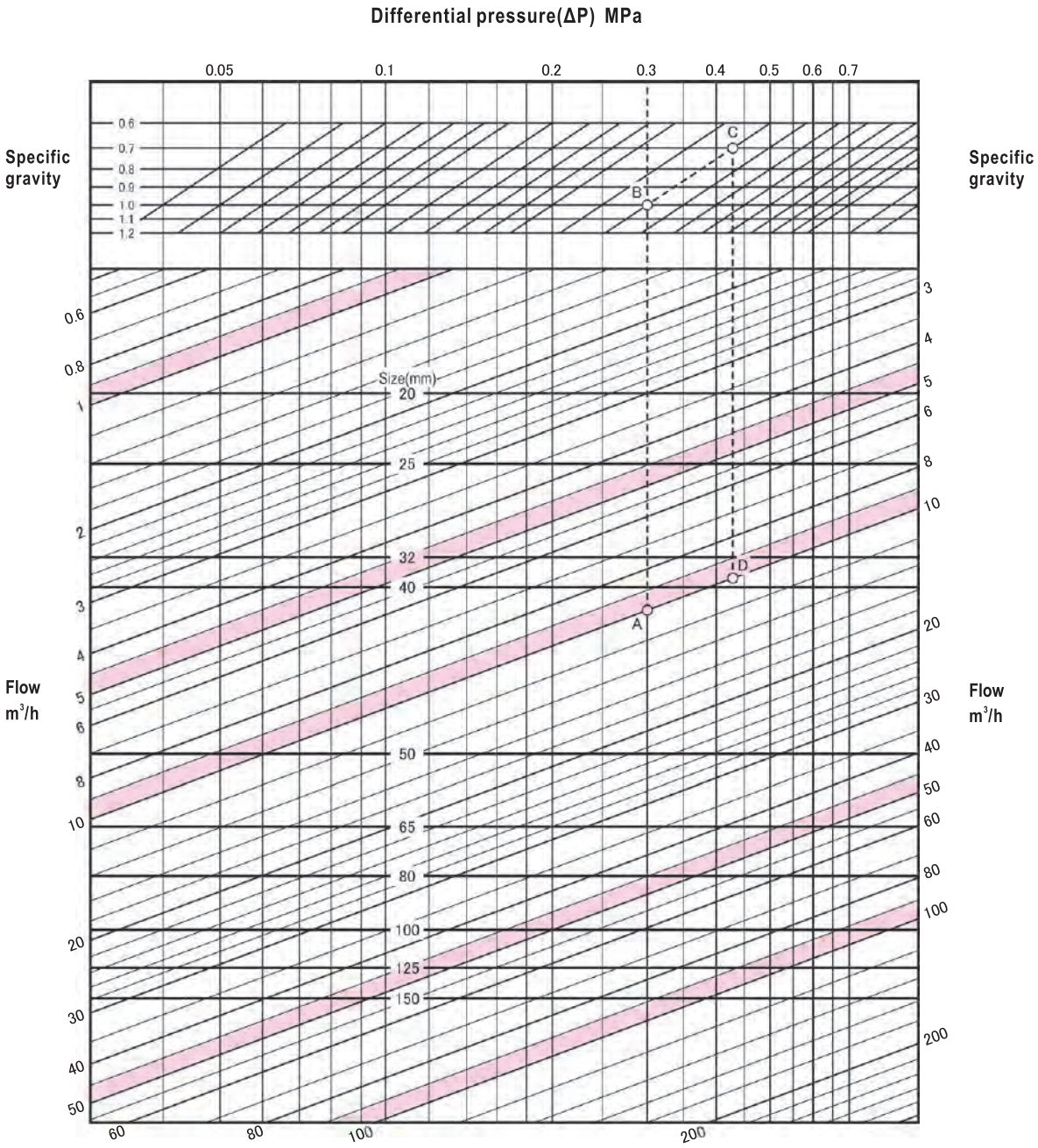

● HOW TO USE THE CHART

Set pressure: 0.4MPa
Back pressure: 0.1MPa
Specific gravity: 1 (water)
Flow rate: 10m³/h.
The differential pressure (ΔP) is 0.4−0.1=0.3MPa
Find out the intersection point A between the 0.3MPa differential pressure (ΔP) line and the 10m³/h flow line. Since point A is between the lines representing nominal diameter 40mm and 50mm, select the larger one, 50mm.
In the case other conditions remain the same but the specific gravity is 0.7, move vertically on pressure differential line ΔP=0.3MPa and find out the intersection point B between this line and the specific gravity line 1.0. Move parallelly from point B on the specific gravity line 0.7 and find out point C. Now draw a vertical line from point C until it intersects with the 10m³/h flow curve. The intersection point is named D. Since point D is between the lines representing size 32mm and 40mm, the larger one, which is 40mm, is selected.

MD-22 Type Primary Pressure Regulating Valve (for Oil)

The diaphragm structure of pressure detecting part allows for stable operation, and the piston backup seal and leakage discharge hole make the valve operation safer.



FEATURES

- Heat resistant rubber makes the valve suitable for high-temperature application.
- The diaphragm of pressure detecting part contacts with liquid. This allows for higher wearing resistance.

SPECIFICATIONS

Model name	MD-22		
Code name	MD22-ML	MD22-MM	MD22-MH
Applicable fluid	Fuel oils(A・B・C heavy), oils		
Fluid temperature	Max. 150℃		
Fluid viscosity	Max. 700cSt		
Adjustable primary pressure	0.05~0.25MPa	0.2~0.45MPa	0.4~0.7MPa
Blowdown pressure	Set pressure × 10% or less (min. within 0.03MPa)		
Leakage allowance	Size 20~32mm:0.09L/min or less, Size 40, 50mm:0.24L/min or less		
End connection	Flanged JIS 10KFF		
Materials	Body(Ductile cast iron), Diaphragm(Synthetic rubber + Teflon)		
Valve body pressure test	Hydraulic 1.5MPa		

* The inlet pressure can be checked by the external detector.

DIMENSIONS

(mm)

Size	L	G	H	A	B	Cv value	Mass(kg)
20(¾″)	170	85	365	121	85	0.8	22
25(1″)	170	85	365	121	85	1	23
32(1¼″)	180	90	370	126	85	1.5	24
40(1½″)	180	90	370	126	85	2	25
50(2″)	200	100	380	136	85	4	28

Flange code JIS 10KFF

PIPING EXAMPLE

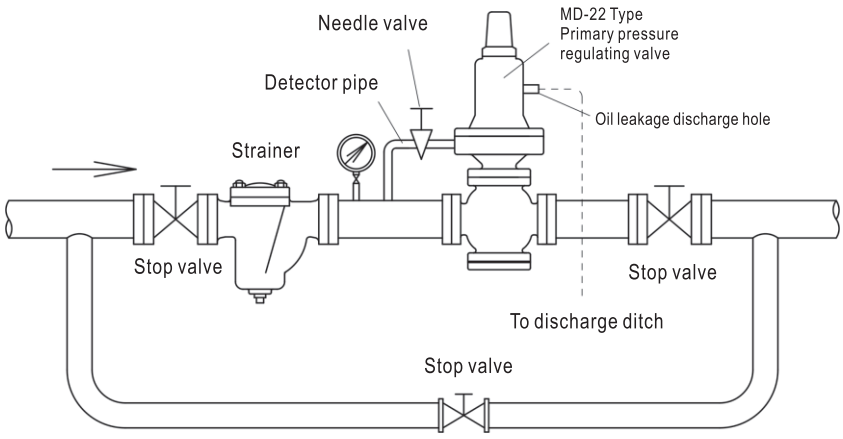

CONSTRUCTION

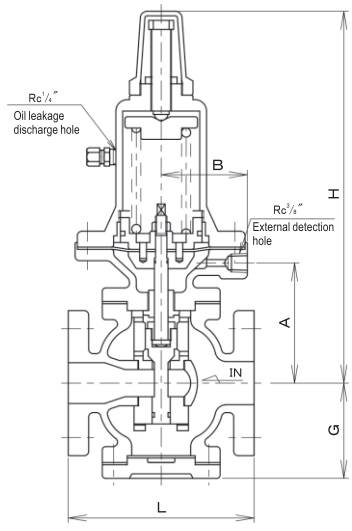

DATA/MD-22 Type Primary Pressure Regulating Valve (for Oil)

SIZE SELECTION CHART (for Liquids)

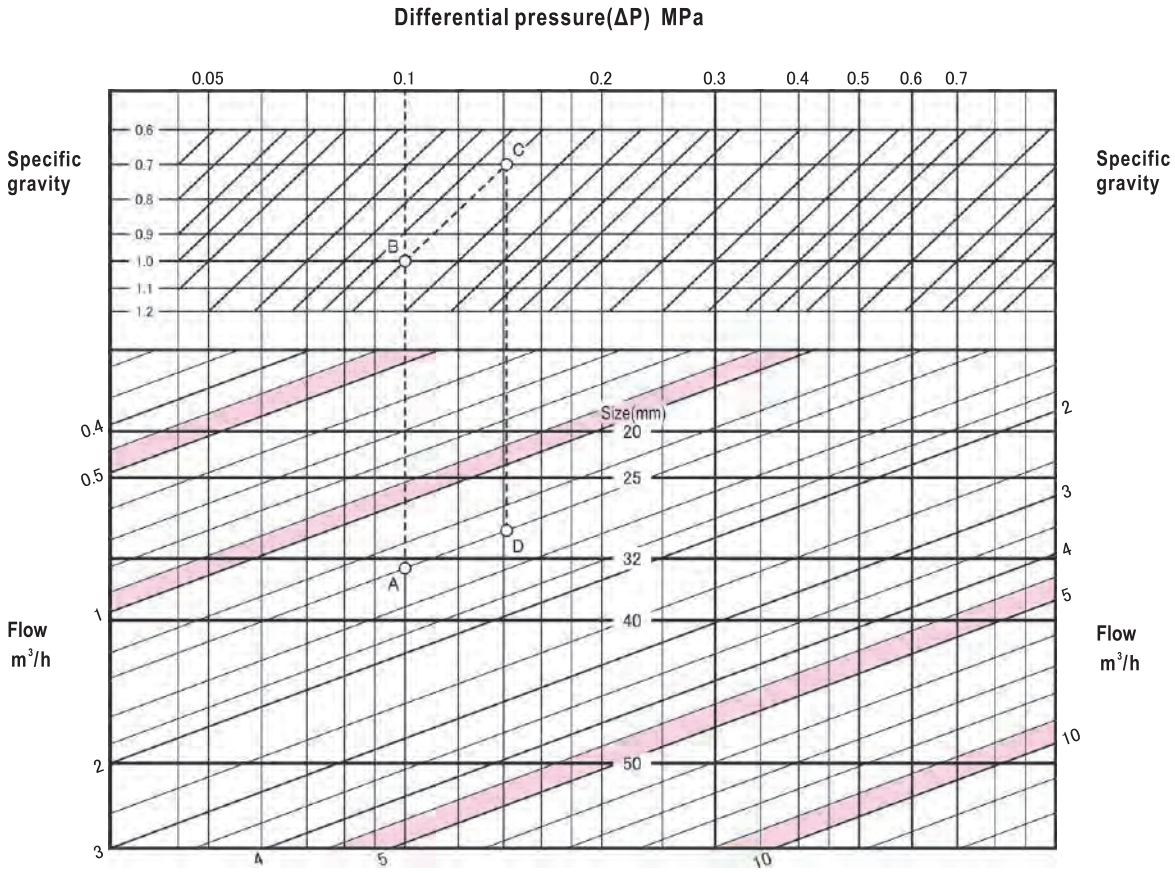

● HOW TO USE THE CHART

Example:
Set pressure: 0.5MPa
Back pressure: 0.4MPa
Specific gravity: 1 (liquid)
Flow: 1.4m³/h
The differential pressure (ΔP) is 0.5−0.4=0.1MPa

Find out the intersection point A between the 0. 1MPa differential pressure (ΔP) line and the 1.4m³/h flow line.
Since point A is located between the size 32mm and 40mm size lines, select the larger size, 40mm.
In the case other conditions remain the same but the specific gravity is 0.7, find out the intersection point B between the 0.1MPa differential pressure (ΔP) line and the 1.0 specific gravity line. Move from point B on the 0.7 specific gravity line parallelly to reach point C. Now draw a vertical line from point C until it intersects with the 1.4m³/h flow line. The intersection point is named D. Since point D is located between the size 25mm and 32mm size lines, select the larger size, 32mm.

LEVEL CONTROL VALVES
VACUUM BREAKER

5

Level control valves can automatically control and maintain the water level of tanks such as a water receiving tank. There are many types of level control valves, such as straight type, angular type. They have a variety of functions and their structures are designed to prevent water hammer and vibration.
In addition to level control valves, we also provide related products that are necessary to operate level control valve for water receiving tank.
Vacuum breaker can introduce air into piping rapidly when there is negative pressure in water supply pipeline. It can be used to prevent backflow of contaminated water due to back siphonage phenomenon.

■ LEVEL CONTROL VALVES

Model name	End connection	Size	Applicable pressure(MPa)	Applicable fluid	Materials		Page
					Body	Trim	
LP-8N	Screwed	25~50(1″~2″)	0.03~0.75	Water	Cast bronze	Brass & Synthetic rubber	118
	Flanged	65~100(2½″~4″)	0.035~0.75	Water	Cast iron		
LP-9N					Cast bronze		
LP-8HN	Screwed	20~50(¾″~2″)	0.03~0.75	Water	Cast bronze	Brass & Synthetic rubber	119
	Flanged	65~100(2½″~4″)	0.035~0.75	Water	Cast iron		
LP-9HN					Cast bronze		
LP-8RN	Screwed	20~50(¾″~2″)	0.03~0.75	Water	Cast bronze	Brass & Synthetic rubber	120
	Flanged	65~100(2½″~4″)	0.035~0.75	Water	Cast iron		
LP-9RN					Cast bronze		
LP-8AN	Screwed	25~50(1″~2″)	0.03~0.75	Water	Cast bronze	Brass & Synthetic rubber	121
LP-8AHN		20~50(¾″~2″)					
LP-8ARN							
WVL-02	Flanged	80~200(3″~8″)	0.03~0.75	Water	Cast iron or Ductile cast iron	Cast bronze & Synthetic rubber	123
		250~400(10″~16″)	0.05~0.75				
WVL-02CN		80~200(3″~8″)	0.03~0.75		Cast iron		

■ LEVEL CONTROL VALVE RELATED ITEMS

Model name	End connection	Size	Applicable pressure(MPa)	Applicable fluid	Materials		Page
					Body	Trim	
DS-11N	Screwed	15·20(½″·¾″)	0~0.75	Water	Cast bronze	Stainless steel	126
DS-11LN							
WS-22	Screwed	20·25(¾″·1″)	0~1.0	Water	Cast bronze	Stainless steel & Synthetic rubber	
WS-22C							
LB-2N	Screwed	20(¾″)	0~0.75	Water	Cast bronze	Polyethylene	127
VD-2N	Screwed	15~25(½″~1″)	Refer to specifications	Water	Brass or cast bronze	Synthetic rubber	

■ VACUUM BREAKER

Model name	End connection	Size	Applicable pressure(MPa)	Applicable fluid	Materials		Page
					Body	Trim	
VD-5N	Screwed	20(¾″)	Max. 1.0	Water or hot water	Cast bronze	Brass & Synthetic rubber	128

LP-8N, 9N Type Level Control Valve (for Water)

General purpose level control valve for water receiving tank. It is made of cast bronze for body to prevent rust water. And no adjustable part, compact, easy to installation.

FEATURES

- Since the passage to the pilot piping is through bypass line, intermittent water fed by the ball tap caused by water wave, has no influence on water supply. Quiet and stable water supply is ensured.
- Compact, simply structured, easy to handle.

SPECIFICATIONS

Model name	LP-8N		LP-9N
Code name	LP8N-F	LP8N-B	LP9N-F
Size	25~50(1″~2″)	65~100(2½″~4″)	
Applicable fluid	Water		
Fluid temperature	5~60℃		
Applicable pressure	0.03~0.75MPa	0.035~0.75MPa	
Minimum pressure differential across the disc	0.03MPa	0.035MPa	
End connection	Screwed JIS Rc	Flanged JIS 10KFF	
Materials	Body(Cast bronze) Disc & seat (Brass and synthetic rubber)	Body(Cast iron) Disc & seat (Brass and synthetic rubber)	Body(Cast bronze) Disc & seat (Brass and synthetic rubber)
Painting	—	Body inside:Epoxy resin	—
Valve body pressure test	Hydraulic 1.75MPa		
Accessories	Ball tap(Size 20mm), male and female bushing	Ball tap(Size 20mm)	Ball tap(Size 20mm), male and female bushing

DIMENSIONS

(mm)

Size	d	L	G		H	H_1	A	Cv value	Mass(kg)	
			LP-8N Type	LP-9N Type					LP-8N Type	LP-9N Type
25(1″)	1″	120	21	—	77	84	15	8	1.5	—
32(1¼″)	1¼″	135	25	—	82	89	10	11	2.1	—
40(1½″)	1½″	145	29	—	89	96	9	16	2.7	—
50(2″)	2″	170	36	—	97	104	3	22	3.9	—
65(2½″)	—	270	75	75	123	130	26	60	21	19
80(3″)	—	270	79	79	123	130	26	70	21	21
100(4″)	—	290	92	89	135	142	39	100	29	28

* Size 65~100mm: Flange code JIS 10KFF



Size 25~50mm
(LP-8N Type)



Size 65~100mm
(LP-8N, 9N Type)

CONSTRUCTION

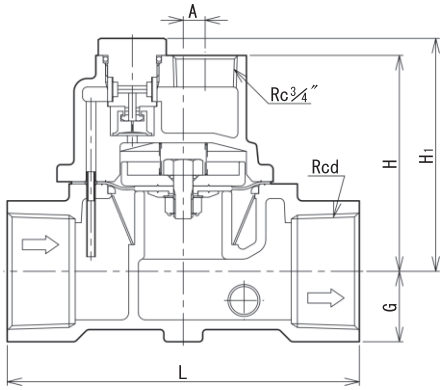

Size 25~50mm (LP-8N Type)

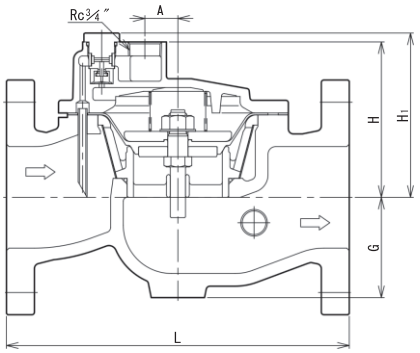

Size 65~100mm (LP-8N, 9N Type)

LP-8HN, 9HN Type Level Control Valve (for Water)

General purpose level control valve with adjustor. Body with cast bronze prevents rust water.

FEATURES

- Flow adjustor and needle for adjusting valve closing time.
- Since the passage to the pilot piping is through bypass line, intermittent water fed by the ball tap caused by water wave, has no influence on water supply. Quiet and stable water supply is ensured.

SPECIFICATIONS

Model name	LP-8HN		LP-9HN
Code name	LP8HN-F	LP8HN-B	LP9HN-F
Size	20~50(¾″~2″)	65~100(2½″~4″)	
Applicable fluid	Water		
Fluid temperature	5~60℃		
Applicable pressure	0.03~0.75MPa	0.035~0.75MPa	
Minimum pressure differential across the disc	0.03MPa	0.035MPa	
End connection	Screwed JIS Rc	Flanged JIS 10KFF	
Materials	Body(Cast bronze) Disc & seat (Brass and synthetic rubber)	Body(Cast iron) Disc & seat (Brass and synthetic rubber)	Body(Cast bronze) Disc & seat (Brass and synthetic rubber)
Painting	—	Body inside:Epoxy resin	—
Flow adjusting mechanism	Equipped		
Needle valve for adjusting the valve close time	Equipped		
Valve body pressure test	Hydraulic 1.75MPa		
Accessories	Ball tap(Size 20mm), male and female bushing	Ball tap(Size 20mm)	Ball tap(Size 20mm), male and female bushing

* The accessory for the valve size 20mm is a ball trap only.

DIMENSIONS

(mm)

Size	d	L	G		H	H_1	A	Cv value	Mass(kg)	
			LP-8HN Type	LP-9HN Type					LP-8HN Type	LP-9HN Type
20(¾″)	¾″	110	16	—	75	97	30	5	1.4	—
25(1″)	1″	120	21	—	80	102	30	8	1.7	—
32(1¼″)	1¼″	135	25	—	85	107	35	11	2.3	—
40(1½″)	1½″	145	29	—	90	113	31	16	2.8	—
50(2″)	2″	170	36	—	98	121	39	22	4.1	—
65(2½″)	—	270	75	75	125	155	26	60	21	19
80(3″)	—	270	79	79	125	155	26	70	21	21
100(4″)	—	290	92	89	137	167	39	100	29	28

* Size 65~100mm: Flange code JIS 10KFF



Size 25~50mm
(LP-8HN Type)



Size 65~100mm
(LP-8HN, 9HN Type)

CONSTRUCTION

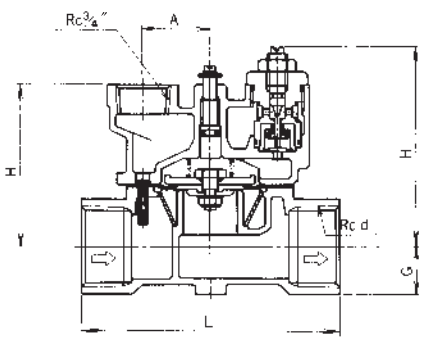

Size 25~50mm (LP-8HN Type)

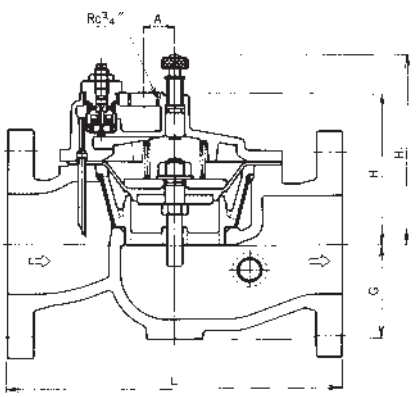

Size 65~100mm (LP-8HN, 9HN Type)

LP-8RN, 9RN Type Level Control Valve (for Water)

Level control valve with draining and flow adjusting functions for applications in cold area. Body with cast bronze prevents rust water.

FEATURES

- Suitable for applications in cold area.
- With draining and flow adjusting functions.
- Since the passage to the pilot piping is through bypass line, intermittent water fed by the ball tap and caused by water wave, has no influence on water supply. Quiet and stable water supply is ensured.

SPECIFICATIONS

Model name	LP-8RN		LP-9RN
Code name	LP8RN-F	LP8RN-B	LP9RN-F
Size	20~50(¾″~2″)	65~100(2½″~4″)	
Applicable fluid	Water		
Fluid temperature	1~60℃		
Ambient temperature	−20~60℃		
Applicable pressure	0.03~0.75MPa	0.035~0.75MPa	
Minimum pressure differential across the disc	0.03MPa	0.035MPa	
End connection	Screwed JIS Rc	Flanged JIS 10KFF	
Materials	Body(Cast bronze) Disc & seat (Brass and synthetic rubber)	Body(Cast iron) Disc & seat (Brass and synthetic rubber)	Body(Cast bronze) Disc & seat (Brass and synthetic rubber)
Painting	—	Body inside:Epoxy resin	—
Flow adjusting mechanism	Equipped		
Drain valve	Equipped		
Valve body pressure test	Hydraulic 1.75MPa		
Accessories	Ball tap(Size 20mm), male and female bushing	Ball tap(Size 20mm)	Ball tap(Size 20mm), male and female bushing

∗1. Ball tap is designed for cold district use.
∗2. The accessory for the valve size 20mm is a ball trap only.

DIMENSIONS

(mm)

Size	d	L	G		H	H_1	H_2	A	Cv value	Mass(kg)	
			LP-8RN Type	LP-9RN Type						LP-8RN Type	LP-9RN Type
20(¾″)	¾″	110	44	—	75	103	30	30	5	1.4	—
25(1″)	1″	120	49	—	80	108	30	30	8	1.7	—
32(1¼″)	1¼″	135	54	—	85	113	30	35	11	2.3	—
40(1½″)	1½″	145	58	—	90	118	30	31	16	2.8	—
50(2″)	2″	170	63	—	98	126	30	39	22	4.1	—
65(2½″)	—	270	102	102	125	155	25	26	60	21	19
80(3″)	—	270	106	106	125	155	25	26	70	21	21
100(4″)	—	290	119	116	137	167	25	39	100	29	28

∗ Size 65~100mm: Flange code JIS 10KFF



Size 20~50mm
(LP-8RN Type)



Size 65~100mm
(LP-8RN, 9RN Type)

CONSTRUCTION

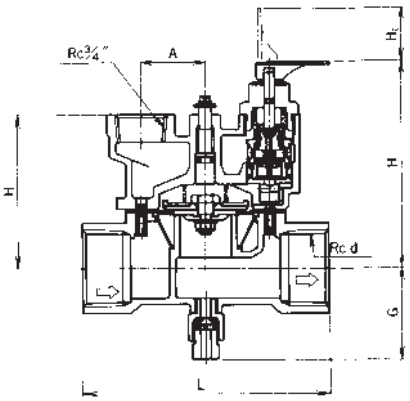

Size 20~50mm (LP-8RN Type)

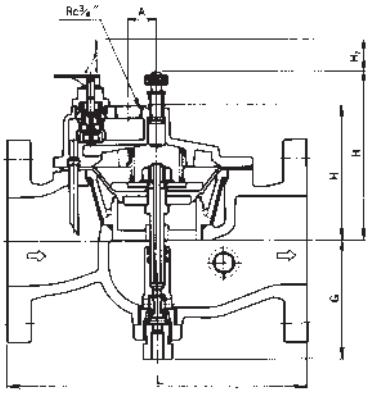

Size 65~100mm (LP-8RN, 9RN Type)

LP-8AN, 8AHN, 8ARN Type Level Control Valve (for Water)

Angular Type level control valve with bronze body prevents occurrence of rusty water.

For valve with flow adjusting function, needle valve is used to adjust valve closing time and the screw is used to adjust water flow.

For valve for applications in cold district,residual water in the valve does not accumulate even at advance draining,and allow smooth water supply at times of recharging.



LP-8AN Type



LP-8AHN Type



LP-8ARN Type

FEATURES

- Bronze body, rust free.
- Different series (flow adjusting function type, valve for applications in cold district type) are available for meeting your demand.

SPECIFICATIONS

Type	Standard	Standard with flow control construction	For cold district
Model name	LP-8AN	LP-8AHN	LP-8ARN
Code name	**LP8AN-F**	**LP8AHN-F**	**LP8ARN-F**
Size	25~50(1″~2″)	20~50(¾″~2″)	
Applicable fluid	Water		
Fluid temperature	5~60℃		1~60℃
Ambient temperature	5~60℃		−20~60℃
Applicable pressure	0.03~0.75MPa		
Minimum pressure differential across the disc	0.03MPa		
End connection	Screwed JIS R		
Materials	Body(Cast bronze),Disc & seat(Brass and Synthetic rubber)		
Flow adjusting mechanism	—	Equipped	Equipped
Needle valve for adjusting the valve close time	—	Equipped	—
Drain valve	—	—	Equipped
Valve body pressure test	Hydraulic 1.75MPa		
Accessories	Ball tap (Size 20mm)		Ball tap for cold district as size 20mm

DIMENSIONS

LP-8AN Type (Standard) (mm)

Size	d	L	L_1	H	H_1	A	Cv value	Mass(kg)
25(1″)	1″	71	40	70	77	15	8	1.3
32(1¼″)	1¼″	88	50	75	82	10	11	1.9
40(1½″)	1½″	95	53	81	88	9	16	2.4
50(2″)	2″	101	57	87	94	3	22	3.4

DIMENSIONS

LP-8AHN Type (Standard with flow control construction), LP-8ARN Type (Cold district) (mm)

Size	d	L	L_1	H	H_1	A	(H_2)	Cv value	Mass(kg)
20(¾″)	¾″	65	40	70(70)	92(106)	30	30	5	1.3
25(1″)	1″	71	40	73(72)	95(101)	30	30	8	1.5
32(1¼″)	1¼″	88	50	78(77)	100(106)	35	30	11	2.2
40(1½″)	1½″	95	53	82(81)	105(110)	31	30	16	2.6
50(2″)	2″	101	57	88(87)	111(116)	39	30	22	3.6

* Figures in ( ) are for LP-8ARN Type.

CONSTRUCTION

LP-8AN Type

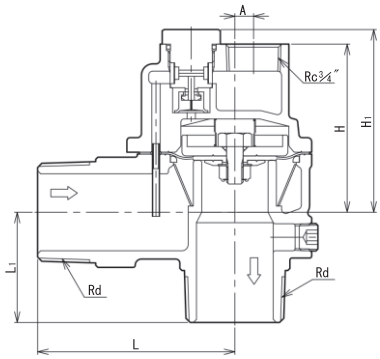

LP-8AHN Type

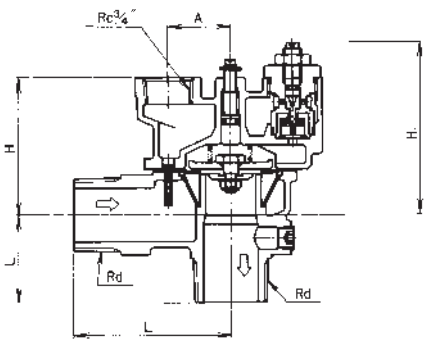

LP-8ARN Type

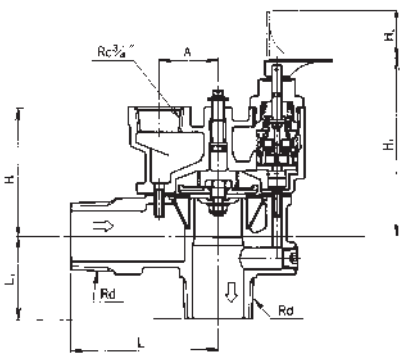

DATA/LP-8N, 9N Type Series Level Control Valve (for Water)

SIZE SELECTION CHART (for Water)

Applicable models: LP-8N,9N
LP-8HN,9HN
LP-8RN,9RN
LP-8AN,8AHN,8ARN

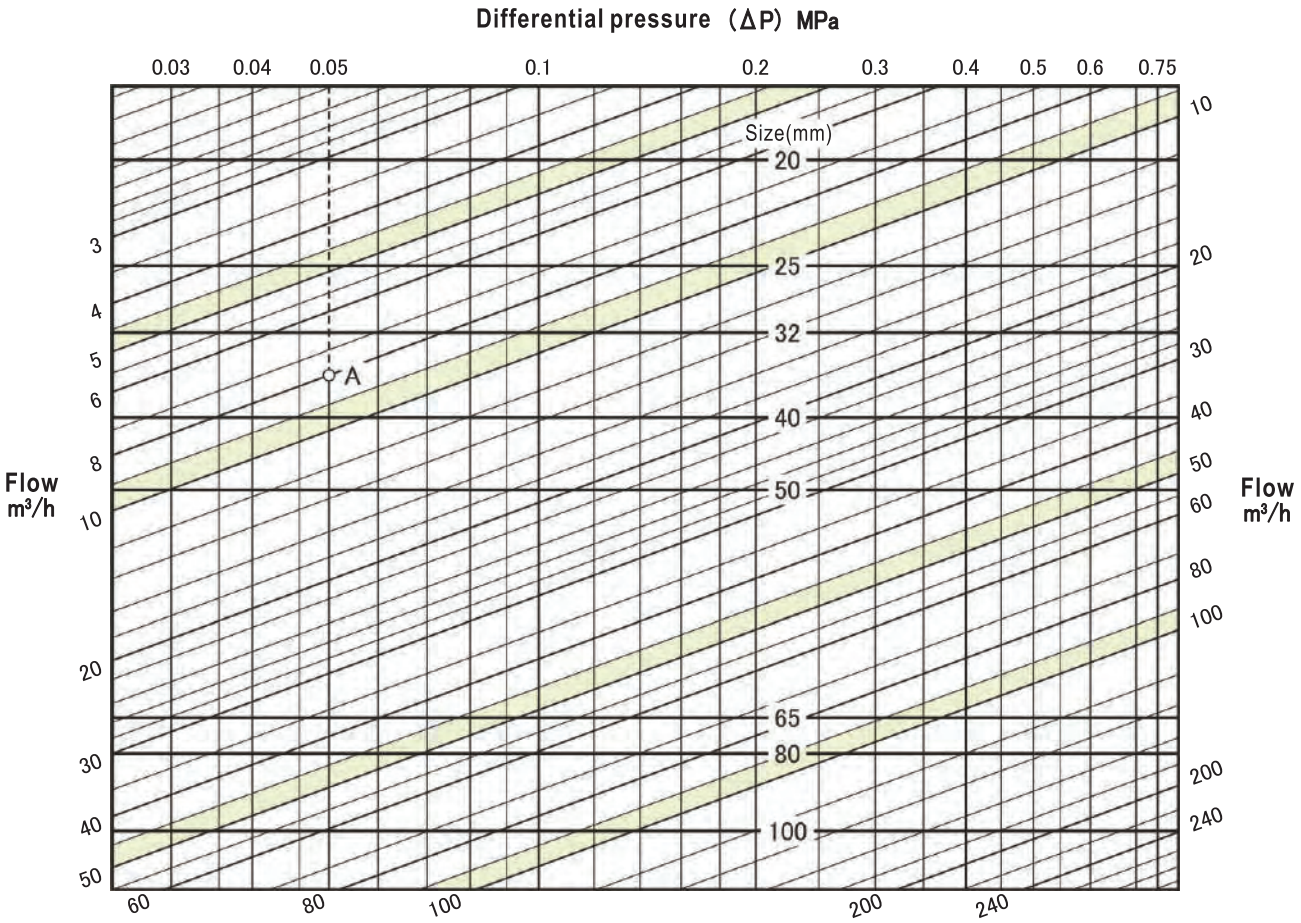

● HOW TO USE THE CHART

Example: determine size for meeting the following conditions.
Water supply pressure: 0.05MPa
Back pressure: 0MPa
Flow: 8m³/h

Differential pressure (ΔP) is 0.05MPa.
The 0.05MPa pressure differential line intersects with the 8m³/h flow curve at point A.

Since point A is between the 32mm and 40mm size lines, the larger one, which is 40mm, is selected.

WVL-02, 02CN Type Level Control Valve (for Water)

Large capacity level control valve for water receiving tank of water supply pipeline, water receiving tank of farm-land irrigation pipeline, and pressure reducing tank etc.



SPECIFICATIONS

Type		Standard		Nylon coating
Model name		WVL-02		WVL-02CN
Code name		WVL02-B	WVL02-L	WVL02CN-B
Size		80~400(3″~16″)	80~200(3″~8″)	80~200(3″~8″)
Applicable fluid		Water		
Fluid temperature		5~60℃		
Applicable pressure		Size 80~200mm:0.03~0.75MPa, Size 250~400mm:0.05~0.75MPa		
Min. press differential across the disc		Size 80~200mm:0.03MPa, Size 250~400mm:0.05MPa		
End connection		Flanged JIS 10KRF		
Materials	Body	Cast iron	Ductile cast iron	Cast iron
	Trim	Diaphragm & disc(Synthetic rubber), Seat ring(Cast bronze)		
Painting or coating for Body		Interior:Epoxy resin		Nylon 11 coating
Valve body pressure test		Hydraulic 1.75MPa		
Installation		Vertically in horizontal pipe line.		
Accessories ball tap		Body Size 80~200mm:Size 20mm(Polyethylene ball) Body Size 250~400mm:Size 25mm(Polyethylene ball)		

＊ Refer to Page 101 for value size selecting chart.

DIMENSIONS (Body: Cast iron)

(mm)

Size	L	G	H	H_1	E	E_1	Cv value	Mass(kg)
80(3″)	350	110	277	261	117	—	90	43
100(4″)	400	130	303	300	130	—	160	60
125(5″)	440	140	334	371	145	—	250	70
150(6″)	500	165	367	416	173	—	360	125
200(8″)	600	200	418	522	218	—	640	200
250(10″)	720	240	490	560	295	390	1000	470
300(12″)	820	280	540	620	328	400	1440	524
400(16″)	1040	370	690	800	440	490	2560	1400

＊Please contact our local agent for the dimensions of the main valve whose body is made of ductile cast iron. Flanged code JIS 10KRF

CONSTRUCTION

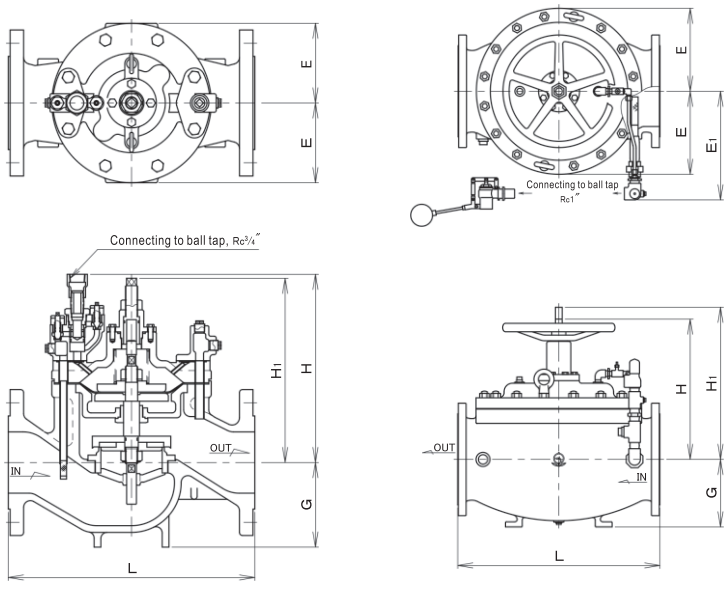

Size 80~200mm

Size 250~400mm

LEVEL CONTROL VALVE ADJUSTMENT (LP Type series)

■ VALVE CLOSING TIME

LP-8HN, 8AHN, 9HN

Although valve closing time has been adjusted at factory before delivery, it needs to be adjusted when there is an abnormal situation.

- **Delaying valve closing time**

  Water hammer may occur if the interval between closing of ball tap and closing of level control valve is too short. To delay valve closing, loosen the lock nut and turn the needle valve to the right (clockwise) to reduce the opening degree of needle valve.

- **Shortening valve closing time**

  The closing water level may be too high or overflow may occur if the interval between closing of ball tap and closing of level control valve is too long. To solve such problems, loosen the lock nut and turn the needle valve to the left (counterclockwise) to increase the opening degree of needle valve.

Adjustment of valve closing time and flow

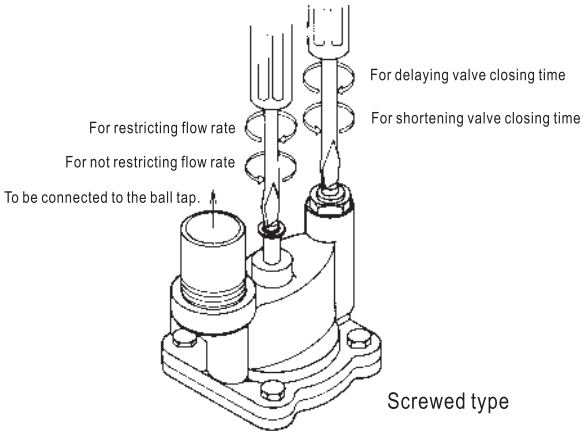

■ FLOW ADJUSTMENT

LP-8HN, 8AHN, 9HN
LP-8RN, 8ARN, 9RN

The flow of water will be extremely large and there will be excessive vibration and noise if the water pressure or the head drop pressure is excessively large. To solve such problems, turn the adjustment screw to the right (clockwise). By doing this, the stroke of the valve is shortened and the flow amount and velocity are limited (do not close the screw completely).

WATER DRAINING AND RE-FEEDING FOR LEVEL CONTROL VALVE FOR APPLICATIONS IN COLD DISTRICT

■ DRAINING

① Close the valve controlling water supply to reduce water level of water receiving tank, and then open the ball tap.

② Raise the water draining lever of level control valve (In case of straight type LP-8RN,9RN Type, open water draining tap) to drain water. Close the tap after water is drained completely.

■ RE-FEEDING (resuming water supply)

Open the water supply valve and start water supply. After 2~3 minutes, check if water is supplied by secondary valve and level control valve, and then pull down the water draining lever to allow normal water supply.

Water draining and re-feeding (resuming water supply)

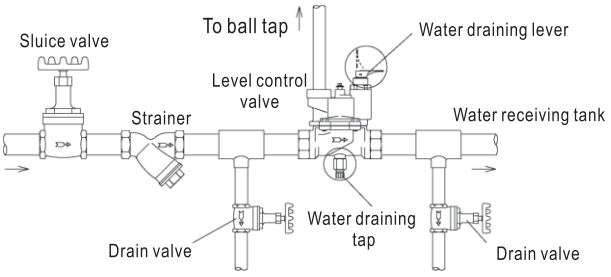

■ PIPING EXAMPLE

Fig.1: Straight type

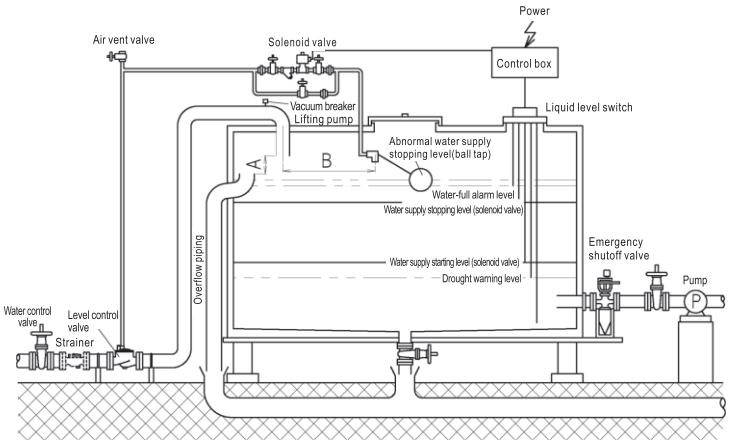

Fig.2: Angular type

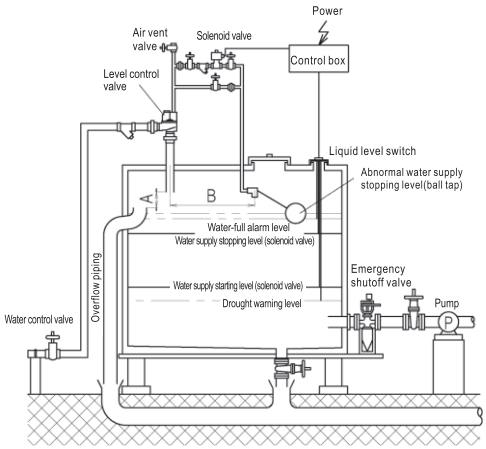

Please note that local governments may have their own regulations on the mounting position and size of level control valve.

■ APPLICATION EXAMPLE

Control based on ball tap and solenoid valve

In this method, level control is realized by opening/closing the main valve through actuation of pilot solenoid valve according to water level detected by level switch.

In the event of abnormal water level due to failure of pilot solenoid valve, the ball tap (which works as a safety device) closes and so does the main valve.

■ INSTALLATION POINT

1. Make sure interval A is minimum “pipe size × 1.7 + 5 (mm)”. (The interval should be adjusted according to the area of water receiving tank.)
2. To avoid fluctuation of the float of ball tap, interval B should be as large as possible (at least 1m) or measures are taken to prevent fluctuation.
3. Install water control valve (sluice valve) and strainer at the primary side of level control valve. Although some products have embedded strainer, the mesh of the embedded strainer may not satisfy the needs. Therefore, you may need to install strainer with appropriate mesh.
   ※ Mesh: Japanese regulation of the Land, Infrastructure and Transportation Ministry requires minimum 40 mesh and minimum 80 mesh for the primary side of pilot solenoid respectively.
4. For the secondary piping of level control valve that is very long or has many bents, please install VD-2N Type vacuum breaker (see Page 127) right after the secondary side.
5. Before installing level control valve, please remove foreign matter from the pipeline, flush it completely, and then install the valve on horizontal pipe uprightly.
6. Screw type level control valves with size 20~50mm should be connected to pipe using union joint or flange joint.
7. To allow easy maintenance, install level control valve in the proximity of pilot pipe using union joint and install stop valve between union joint and ball tap.
8. The nominal diameter of pilot pipe should not be smaller than that of the connection port of level control valve.
9. Install ball tap in a place that is near to manhole for easy maintenance.
10. Take measures to prevent freezing or damage of level control valve if it is used in cold area.
11. Depending on the position of water receiving tank, there may be noise due to water flowing from the pipe at the outlet of level control valve. Therefore, if the tank is near to places where people are living, sound insulation measures need to be taken to reduce noise.

PILOT-OPERATING SOLENOID VALVE (to be ordered separately)

During water feeding to tank, pilot type solenoid valve in pilot piping line is possibly uncontrollable due to pressure drops, this select the corrent direct type solenoid valve according to table of suitable solenoid valve.

TABLE OF SUITABLE SOLENOID VALVES

○:Good ×:Bad

Level control valve		DS-11N,11LN (Normally closed)	WS-22 (Normally closed)	WS-22C (Normally open)
Model name	Size			
LP-8N,8HN	20~50mm	○	○	○
	65~100mm	×	○	○
LP-8AN, 8AHN	20~50mm	○	○	○
LP-9N, 9HN	65~100mm	×	○	○
WVL-02	80~400mm	×	○	○
LP-8RN,8ARN,9RN Other level control valves		×	○	○

＊For WVL-02 Type above 250mm in size, please use size 25mm product of WS-22, 22C Type.
Please select WS Type if the valve is to be used with level control valve provided by other manufacturers or those for cold region. In the case of application in cold region, please apply sufficient insulation to avoid freezing and damage. However, insulation is not necessary for coil.

DS-11N,11LN Type Solenoid Valve (Normally closed)

CONSTRUCTION



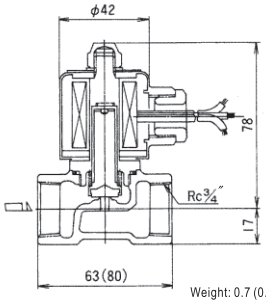

Weight: 0.7 (0.8) kg

Values in parentheses are of DS-11LN Type.
Note: The size and weight are those of size 20mm valve.

SPECIFICATIONS

Type	Standard	Installation of pipe end core is possible*1
Model	DS-11N	DS-11LN
Code name	DS11N-J□	DS11LN-J
	※1or 2 for rated voltage is required in □	—
Size	20 or 15 mm (¾″ or ½″)	
Applicable pressure	0~0.75MPa	
Materials	Body(Cast bronze), Disc & seat(Stainless steel)	
Rated voltage	1: AC100V 50/60Hz	AC100V 50/60Hz or
	2: AC200V 50/60Hz	AC200V 50/60Hz
Rated current	AC100V:0.19A AC200V:0.10A	
Starting current	AC100V:0.57A AC200V:0.29A	
Protection	Dustproof, drip-proof, for indoor application *2.	
Cv value	0.45	

＊1. DS-11LN Type with pipe end core is available.
＊2. For outdoor application, please use the product with TB-03 Type series terminal box.

WS-22 Type Solenoid Valve (Normally closed)

CONSTRUCTION



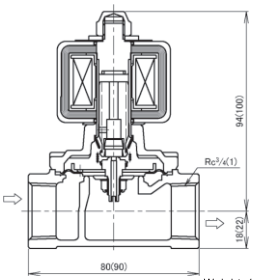

Weight: 1.1kg (1.6)

Note: The number in ( ) is for size 25mm valve.

SPECIFICATIONS

Model	WS-22	
Code name	WS22-F	
Size	20(¾″)	25(1″)
Applicable pressure	0~1.0MPa	
Materials	Body(Cast bronze), Disc & seat(Stainless steel and Synthetic rubber)	
Rated voltage	Common use:AC100V 50/60Hz or AC200V 50/60Hz *1.	
Rated current	AC100V:0.21A AC200V:0.10A	
Starting current	AC100V:0.7A AC200V:0.35A	
Protection	Dustproof, drip-proof, for indoor application *2.	
Cv value	7	10

＊1. For special voltage, please contact our agent in your area.
＊2. For outdoor application, please use the product with TB-03 Type series terminal box.

WS-22C Type Solenoid Valve (Normally open)

CONSTRUCTION



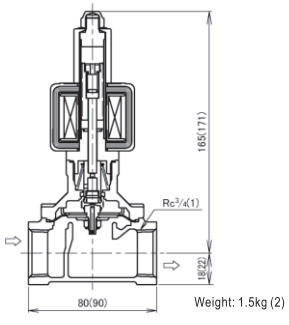

Weight: 1.5kg (2)

Note: The number in ( ) is for size 25mm valve.

SPECIFICATIONS

Model	WS-22C	
Code name	WS22C-F	
Size	20(¾″)	25(1″)
Applicable pressure	0~1.0MPa	
Materials	Body(Cast bronze), Disc & seat(Stainless steel and Synthetic rubber)	
Rated voltage	Common use:AC100V 50/60Hz or AC200V 50/60Hz *1.	
Rated current	AC100V:0.35A AC200V:0.18A	
Starting current	AC100V:1.25A AC200V:0.63A	
Protection	Dustproof, drip-proof, for indoor application *2.	
Cv value	7	10

＊1. For special voltage, please contact our agent in your area.
＊2. For outdoor application, please use the product with TB-03 Type series terminal box.

LB-2N Type Pilot Ball tap (Standard accessories)

Standard accessory for level control valve. Pilot ball tap works with level control valve and maintains a fixed level of water in the tank.

※ If level control valve is replaced, the ball tap should also be replaced.

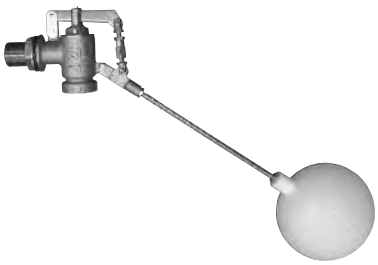

SPECIFICATIONS

Size of main body of level control valve	20~50(¾″~2″)	65~150(2½″~6″)	200(8″)
Model name	LB-2N		
Code name	LB2N-F2	LB2N-F5	LB2N-F6
Applicable fluid	Water		
Fluid temperature	1~60℃		
Applicable pressure	0~0.75MPa		
Materials	Body(Cast bronze), Float(Polyethylene)		
Valve body pressure test	Hydraulic 1.75MPa		

CONSTRUCTION

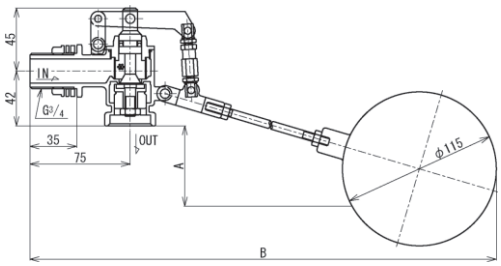

DIMENSIONS

(mm)

Code name	A	B	Mass(kg)
LB2N-F2	110	450±10	1
LB2N-F5	200	500±10	1.05
LB2N-F6	250	450±10	1.05

VD-2N Type Vacuum Breaker (Optional item) for outlet side of Level control valve

The operation of level control valve may become unstable if the outlet side piping is too long or the piping is a vertical piping. To maintain stable operation of the valve, install vacuum breaker on the pipe right after the outlet side of level control valve.

Note: Select VD-5N Type (see Page 128) for indoor piping of water supply or air conditioning system.



SPECIFICATIONS

Model name	VD-2N
Code name	VD2N-F
Applicable fluid	Water
Fluid temperature	5~60℃
Applicable pressure	Max. 0.75MPa
Opening operation	98.3kPa · A(-3.0kPa) or less
Closing operation	111.3kPa · A(10kPa) or more
Materials	Body(Brass or Cast bronze), Disc(Synthetic rubber), Ball(Polyethylene), Strainer(Stainless steel)

DIMENSIONS

(mm)

Size	A	D	H	Mass(kg)	Applicable size of level control valve
15(½″)	½″	25.4	65	0.1	20~32(¾″~1¼″)
20(¾″)	¾″	32.3	88	0.16	40~50(1½″~2″)
25(1″)	1″	40.4	100	0.29	65(2½″) or bigger

CONSTRUCTION

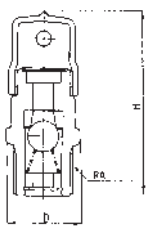

CAPACITY (Air)

(kg/h)

Size	−0.003MPa	−0.006MPa	−0.01MPa
15(½″)	0.94	1.30	1.65
20(¾″)	1.40	1.95	2.50
25(1″)	1.95	2.70	3.40

● Convert kg/h → m^3/h (Standard state) (for reference only)
Density of air is 1.226kg/m^3 (15℃, 1atm)

$$m^3/h\ (\text{Standard state}) = \frac{\text{Value in above table (kg/h)}}{1.226\ (kg/m^3)}$$

VD-5N Type Vacuum Breaker (for Water or Hot Water)

for Water Supply Equipments, Air Conditioning Equipments, and Kitchen instruments, etc.preventing backflow caused by back siphonage

This product can rapidly introduce air into feed pipe when there is negative pressure in the pipe and prevent backflow due to back siphonage.

It is suitable to install at unprepared space of air gap and vacuum breaking for back siphonage.



FEATURES

- It can be used at indoor without causing any contaminations to the sorrounding by leaking from the valve due to the connection of discharge piping.
- Strainers embedded at the feed pipe side and air inlet side, prevent entry of dust etc.

SPECIFICATIONS

Model name	VD-5N
Code name	**VD5N-F**
Size	20(¾″)
Applicable fluid	Water & hot water
Fluid temperature	5~90℃
Applicable pressure	Max. 1.0MPa
Amount of air vacuuming (Standard state)	17m3/h and more at differential pressure 1.5kPa
End connection	Inlet:Screwed JIS R¾″, Outlet:Screwed JIS R½″
Materials	Body(Cast bronze), Disc(Brass and synthetic rubber)
Valve body pressure test	Hydraulic 1.75MPa
Strainer	40 Mesh

CONSTRUCTION

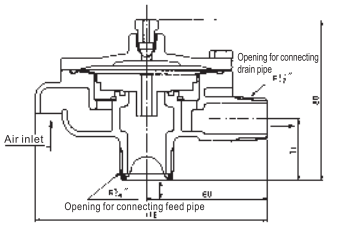

Weight:1.1kg

POINTS OF INSTALLATION AND OPERATION

- The installation position should be at least 150mm above the overflow edge or overflow surface of water receiving container.
- To ensure safer water supply, install check valve at the water supply pipe side.
- Keep the product vertical to pipe, with deviation of verticality less than 5°.
- Carry out sufficient flushing of pipe before installation.
- In the case of indoor piping, install indirect draining hardware and lead it to draining tank to drain water that may leak from the opening of connecting drain pipe.
  In addition, the piping from the opening of connecting drain pipe should not run upwardly and be supported or fixed properly.
- Consider thermal insulation if there is risk of freezing.
  Otherwise,do not block vacuuming hole by thermal insulation.
- Install stop valve (sluice valve/full bore ball valve) in water supply pipe to make maintenance easier.
- Do not connect directly to stop valve or joint which embedded pipe end core.

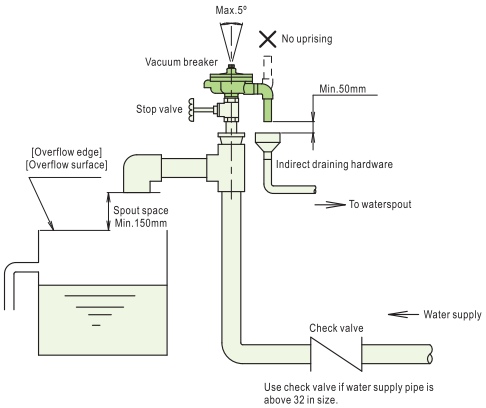

EXAMPLES OF APPLICATION

Air conditioning equipment	Kitchen utensils	Cleaning machines	Others
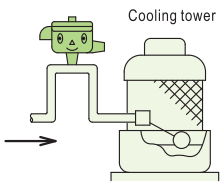	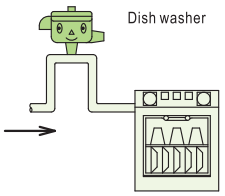	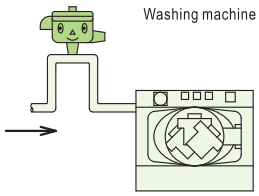	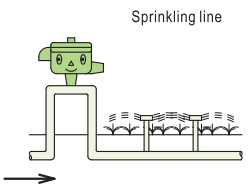
For water tanks, liquid tanks etc.	For bottle washer, rice washer etc.	For cleaning machines	For pool, medical/research equipments etc.

TEMPERATURE REGULATING VALVES

6

TD type are self-operating temperature regulating valves,which automatically carry out temperature control for water tank or heat exchanger,without using any power supply.

Model name	Seat type	End connection	Size	Applicable pressure	Applicable fluid	Materials		Page
						Body	Disc & seat	
TD-8	Single-seated	Screwed	15~40(½″~1½″)	Refer to respective specifications of each model	Steam	Cast bronze	Stainless steel	130
TD-8A					Water		Cast bronze & Brass	
TD-2	Double-seated	Flanged	15~150(½″~6″)		Steam or hot water	Cast iron	Cast bronze	131
TD-2L			15~100(½″~4″)					
TD-2A			15~150(½″~6″)		Water or cold medium			
TD-2AL			15~100(½″~4″)					
TD-4, 4L	Single-seated	Flanged	15~40(½″~1½″)		Steam or hot water	Cast iron	Stainless steel	134

TD-8, 8A Type Temperature Regulating Valve

for Hot Water Tank, Heat Exchanger, Heavy Oil Heater, etc.

High-performance single seat valve with pressure balancing structure and advantages of single seat valves.

FEATURES

- Compact structure, large capacity.
- Single seat valve with less leakage.

SPECIFICATIONS

Utility		Heating		Cooling	
Model name		TD-8		TD-8A	
Type		Liquids	Gases	Liquids	Gases
Code name		**TD8W-J□**	**TD8G-J**	**TD8AW-F**	**TD8AG-F**
		※ 1, 2 or 3 for adjustment temperature range is required in □.			
Adjustment temperature range		**1:40~60℃ 2:60~80℃ *1.*2. 3:80~100℃**	40~60℃, 50~70℃, 60~80℃, 70~90℃, 80~100℃*1.*2.		
Applicable ambient temperature		Setting temperature −10℃ or below			
Applicable fluid		Steam		Water	
Fluid to be heated or cooled		Water, oil & liquids	Gases	Water, oil & liquids	Gases
Seat type		Pressure balance type single seated			
Leakage allowance		0.05% or less than the rated flow			
Applicable temperature of valve body		Max. 184℃		Max. 60℃	
Length of capillary tube		2m(Available up to 5m)			
End connection		Screwed JIS Rc (Union)			
Materials	**Body**	Cast bronze			
	Disc & Seat	Stainless steel		Disc(Cast bronze), Seat(Brass)	
	Bellows	Phosphor bronze			
	Thermo bulb	Stainless steel	Stainless steel with stainless steel fin	Stainless steel	Stainless steel with stainless steel fin
Applicable pressure for thermo bulb		Max. 1.0MPa			
Pressure limit at inlet		0.7MPa			
Valve body pressure test		Hydraulic 1.5MPa			

＊1. Other than the above adjustment temperature range are available upon your request.
＊2. In case of liquid use, adjustable temperature range 100~120℃.(Withstanding temperature 130℃) is available upon your request.
＊3. Refer to Page 132 for adjustable temperature range.
＊4. In case of liquid use, the protection cap for thermo bulb, with non-standard dimension is available upon your request.

DIMENSIONS

(mm)

Size	L	G	H	d	Cv value	Mass(kg)
15(½″)	136	30	378	½″	3	7
20(¾″)	136	30	378	¾″	3	7
25(1″)	142	33	378	1″	4	7
32(1¼″)	184	40	391	1¼″	6.5	8.5
40(1½″)	202	42	395	1½″	8	9

＊Mass are for TD-8 Type

CONSTRUCTION

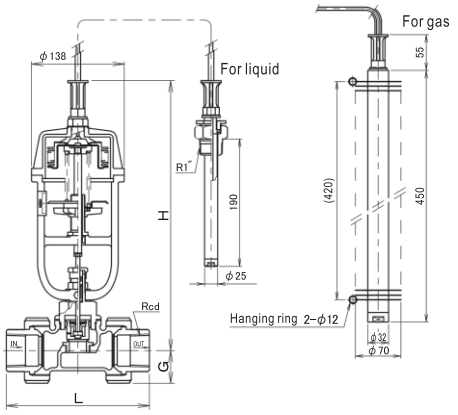

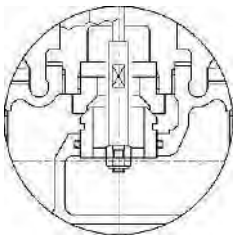

TD-8A Type



TD-2 Type Series Temperature Regulating Valve

General purpose, flanged temperature regulating valves for heating of water tank, heat exchanger, heavy oil heater etc. The series also include valves using water or coolant for cooling purpose. And we have a suitable models applicable in place where ambient temperature is higher than set temperature or applicable for the lower temperature of 40℃ or below.



CONSTRUCTION

TD-2 Type

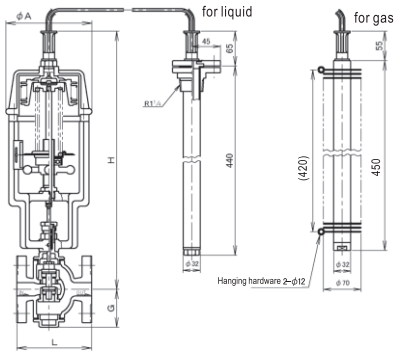

Depending on size, the structure may vary.
The bellows of TD-2L and TD-2AL Types have different structures.

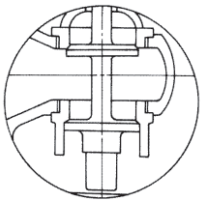

TD-2A,2AL Type

LEAKAGE ALLOWANCE

(g/min or mL/min)

Size(mm)	15	20	25	32	40	50
TD-2 Type TD-2A Type	20	20	20	26	32	40
TD-2L Type TD-2AL Type	40	40	40	52	64	80

Size(mm)	65	80	100	125	150
TD-2 Type TD-2A Type	52	64	80	100	120
TD-2L Type TD-2AL Type	104	128	160	—	—

∗ Reading in g/min for testing fluid STEAM.
∗ Reading in mL/min for testing fluid WATER.

SPECIFICATIONS (Common use)

Utility		Heating	Low temp heating	Cooling	Low temp cooling
Model name		TD-2	TD-2L	TD-2A	TD-2AL
Size		15~150(½″~6″)	15~100(½″~4″)	15~150(½″~6″)	15~100(½″~4″)
Applicable fluid		Steam & hot water		Water & cold media	
Fluid temperature		Max. 184℃		Max. 60℃	
Seat type		Double seated			
Leakage allowance		Refer to table of leakage allowance			
End connection		Flanged JIS 10KFF			
Materials		Body(Cast iron), Disc & Seat(Cast bronze*), Bellows(Phosphor bronze)			
Pressure limit at inlet	Size(mm)	15~40	50~65	80	100	125	150
	Limit(MPa)	1.0	0.7	0.5	0.4	0.35	0.2
Valve body pressure test		Hydraulic 1.5MPa					

∗ Disc and seat with stainless steel are available upon your request.

SPECIFICATIONS TD-2 Type (Heating)、TD-2A Type (Cooling)

Model name	TD-2(Heating)		TD-2A(Cooling)	
Utility	Liquids	Gases	Liquids	Gases
Code name	**TD2W-B □∗1.**	**TD2G-B**	**TD2AW-B**	**TD2AG-B**
	※ 1, 2 or 3 for adjustment temperature range is required in □.			
Adjustment temperature range	**1:40~60℃ 2:60~80℃∗2.∗3. 3:80~100℃**	40~60℃, 50~70℃, 60~80℃, 70~90℃, 80~100℃∗2.∗3.		
Applicable ambient temperature	Setting temperature −10℃ or below			
Fluid to be heated or cooled	Water, oil & liquids	Gases	Water, oil & liquids	Gases
Length of capillary tube	Size 15~100mm:2m∗5., Size 125~150mm:4m∗5.			
Thermo bulb materials	Stainless steel	Stainless steel with stainless steel fin	Stainless steel	Stainless steel with stainless steel fin
Applicable pressure for thermo bulb	Max. 1.0MPa			

SPECIFICATIONS TD-2L Type (Low temp Heating),TD-2AL Type (Low temp Cooling)

Model name	TD-2L(Low temp heating)		TD-2AL(Low temp cooling)	
Utility	Liquids	Gases	Liquids	Gases
Code name	**TD2LW-B**	**TD2LG-B**	**TD2ALW-B**	**TD2ALG-B**
Adjustment temperature range	15~35, 20~40, 35~55℃			
Applicable ambient temperature	Setting temperature +20℃ or below			
Fluid to be heated or cooled	Water, oil & liquids	Gases	Water, oil & liquids	Gases
Length of capillary tube	Size 15~100mm:2m∗5., Size 125~150mm:4m∗5.			
Thermo bulb materials	Stainless steel	Stainless steel with stainless steel fin	Stainless steel	Stainless steel with stainless steel fin
Applicable pressure for thermo bulb	Max. 1.0MPa			

∗ 1. In case of size 100mm or bigger, the code name is TD2W-B.
∗ 2. Items other than the above adjustment temperature range are available upon your request.
∗ 3. In case of liquid use, adjustable temperature range 100~120℃.(With standing temperature 130℃) is available upon your request.
∗ 4. Refer to Page 132 for adjustable temperature range.
∗ 5. Length of capillary tube up to 5m is available upon your request.
∗ 6. In case of liquid use, for sizes 15~65mm (½″~2½″), the protection cap for thermo bulb, with non-standard dimension is available upon your request.

DIMENSIONS

(mm)

Size	L	G	H	A	Cv value	Mass(kg)
15(½″)	126	60	475	160	3	12.1
20(¾″)	130	60	475	160	3	12.4
25(1″)	140	70	485	160	4	13.5
32(1¼″)	150	75	490	160	6.5	15
40(1½″)	160	75	490	160	8	15.5
50(2″)	180	100	525	160	12.5	22.5
65(2½″)	215	115	535	160	18	29.2
80(3″)	260	125	580	180	25	38
100(4″)	300	150	605	180	40	57.5
125(5″)	360	180	745	220	70	75.6
150(6″)	382	205	770	220	110	125

Flange code JIS 10KFF

Key Points for Installation

■ PIPING EXAMPLE

Fig.1 Piping for liquids

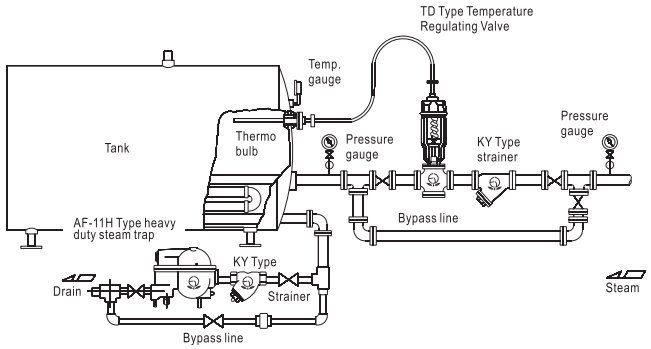

Note:It's required that the safety relief valve should be installed on the tank side.

Fig.2 Piping for gases

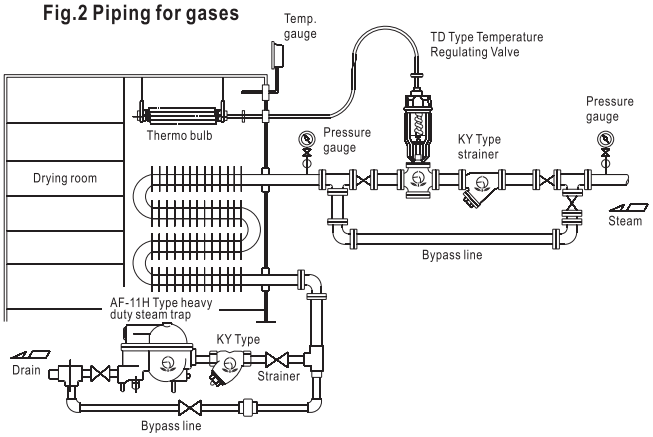

■ KEY POINTS FOR SELECTION AND INSTALLATION

1. Temperature regulating may not be possible if ambient temperature is very high due to direct sunlight or heat accumulated in the place where the valve is installed. The following is the allowed ambient temperature for different types of valves.
   ※Allowed ambient temperature:
   TD- □ Type (for heating), TD- □A Type (for cooling): Atmosphere temperature −10℃ or below against set temperature.
   TD-□L Type (for low temperature heating), TD-□ALType (low temperature cooling): Atmosphere temperature +20℃ or below against set temperature.
2. Generally, for the purpose of selecting size of valve, the differential pressure before and after valve should be 0.05MPa. In addition, the inlet pressure of temperature regulating valve should be 0.2~0.3MPa. Such a pressure can help ensuring stable temperature regulating performance and expanding the service life of the valve.
3. For ideal controllability, take the median of the temperature regulating range as set temperature.
4. For applications with low capacity and risk of leakage, select single seat TD-8 or TD-4 Type series that have less leakage.
5. Install strainer at the primary side of temperature regulating valve.
6. For equipments whose operation cannot be stopped, install bypass piping (with stop valve) between the primary and secondary sides of temperature regulating valve (see Fig.1, 2). If such a bypass piping is not installed, install blowing stop valve, which is branched from the main pipe, right before the primary stop valve of temperature regulating valve to make flushing possible.
7. The temperature may exceed set temperature due to leakage of temperature regulating valve. To avoid such increase of temperature, install electric valve or other blocking devices at the outlet side of temperature regulating valve.
8. Make sure the direction of flow of fluid is the same as the direction marked on the product and install temperature regulating valve vertically to horizontal pipes.
9. Install stop valve and pressure gauge before and after temperature regulating valve (see Fig.1, 2).
10. The thermo bulb should be installed in a manner so that the head faces horizontally or slightly downwardly (but not upwardly). In addition, the "TOP" mark must face upwardly (see Fig.3).
11. The thermo bulb must have at least 3/4 of its total length submerged into the flowing fluid. The thermometer must be installed near and at the same height of the thermo bulb.
12. Do not bend the capillary tube to an acute angle.
13. If the fluid is steam, install steam trap for discharging drain generated by heat exchanger.
14. Leave sufficient space for dismantling and maintenance purpose.
15. Temperature regulating valve should be supported and fixed properly to avoid impact due to the weight of piping, bending force or vibration.
16. In case of any freezing possibility, insulate or drain out.
17. Deviation of temperature setting and range of temperature regulating are as below:

Fig.3 Direction for installation of thermo bulb

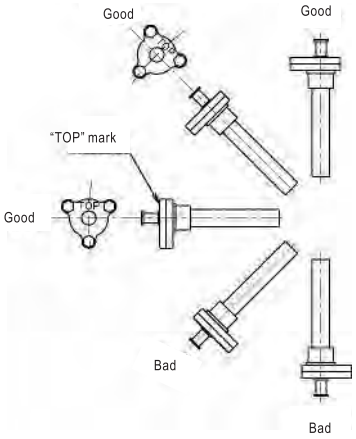

■ TEMPERATURE SET ERROR (TD-8, 8A Type, TD-2 Type Series)

Length of capillary tube	Heating& cooling		Low temp heating & cooling
	A	B	
2m	±2℃	±3℃	±3.5℃ 2m or longer add ±0.5℃ per 1m
2~3.5m	±2.5℃	±3.5℃	
3.5~5m	±3℃	±4℃	

＊1. A:In case of Max. 100℃ or less for adjustable temperature range.
B:In case of exceeding 100℃ in all or part of adjustable temperature range.
＊2. In case of gases service,±1℃ is added.

■ ADJUSTABLE TEMPERATURE RANGE (TD-8, 8A Type, TD-2 Type Series)

Heating& cooling			Low temp heating & cooling	
Code No.	Adjustable temp. range	Withstanding temperature	Adjustable temp. range	Withstanding temperature
1	40~60℃	70℃	15~35℃	50℃
	50~70℃	80℃	20~40℃	
2	60~80℃	90℃	35~55℃	70℃
	70~90℃	100℃		
3	80~100℃	110℃		

＊Other than the above temperature range items are available upon your request.

DATA/TD Type Temperature Regulating Valve (TD-2, 8 Type Series)

SIZE SELECTION CHART (for Steam)

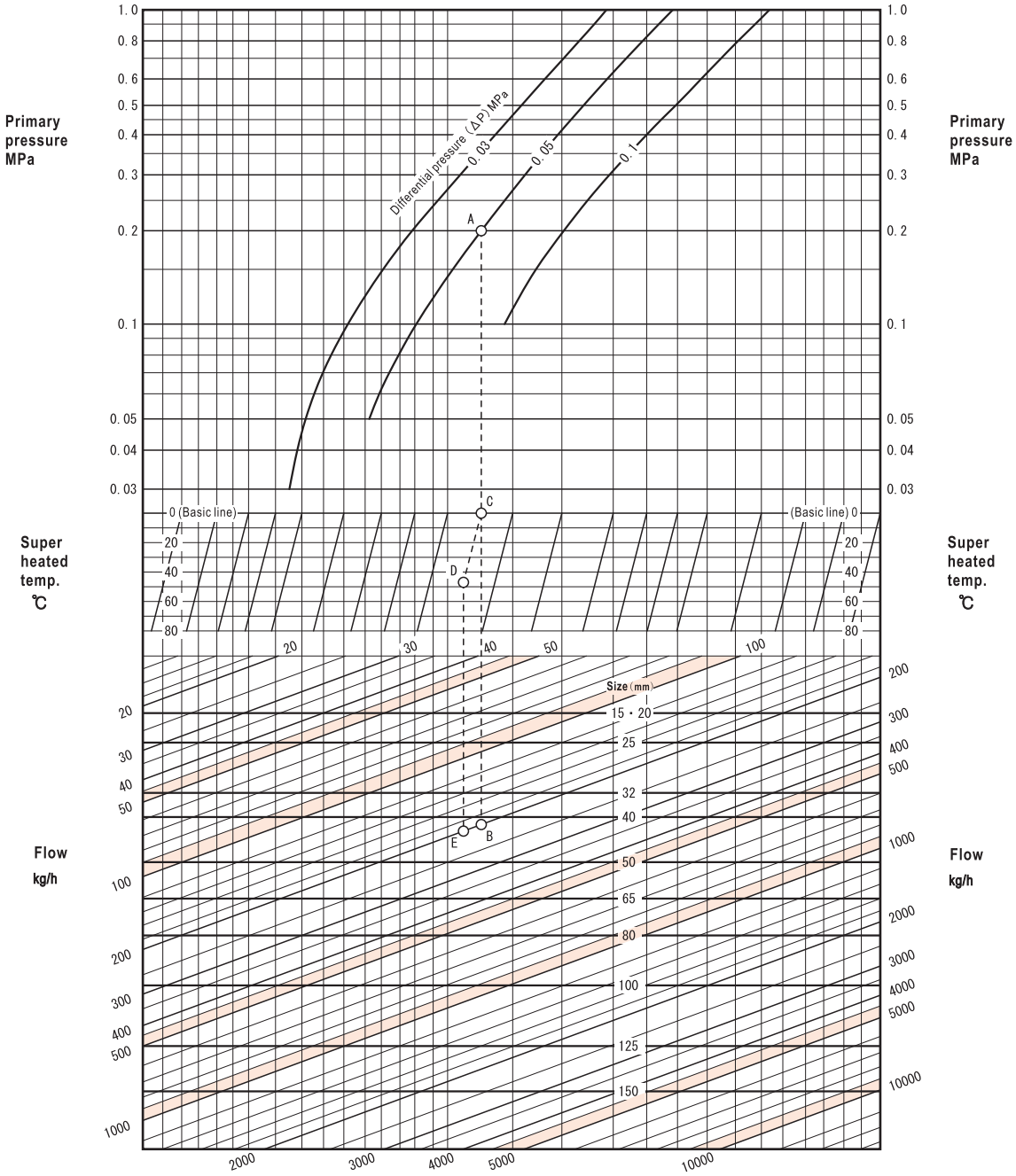

● HOW TO USE THE CHART

Select a valve with proper size for meeting the following requirements.
Primary pressure: 0.2MPa
Flow of saturated steam: 200kg/h
Differential pressure: 0.05MPa

First, find out the point (A) where the primary pressure line (0.2MPa) intersects with the differential line (0.05MPa). Draw a vertical line from point A. This line intersects with flow curve (200kg/h). The intersection point is B. Since B is located between a nominal diameter range of 40mm~50mm. The larger value, which is 50mm, is taken as the nominal diameter that we are looking for.

If the steam temperature is 180℃, the first thing is to calculate the degree of superheat.

Since degree of superheat = temperature of superheat steam-temperature of saturated steam, Degree of superheat: 180℃−132.9℃=47.1℃. Draw a vertical line from point A until it intersects with the benchmark line. The intersection point is named C. Move from point C parallelly along the superheat line (47.1℃) to decide point D.

Draw a vertical line from point D until it intersects with flow curve (200kg/h). the intersection point is named E. Since point E is located between a nominal diameter range of 40mm~50mm. The larger value, which is 50mm, is taken as the nominal diameter that we are looking for.

See Page 278 for temperature of saturated steam.

TD-4, 4L Type Temperature Regulating Valve

Small capacity, flanged, single seat temperature regulating valve with less leakage. Suitable for installation at places where leakage is not permitted and on small capacity machines.



SPECIFICATIONS

Utility		Heating		Low temp heating
Model name		TD-4		TD-4L
Code name		**TD4-G**		**TD4L-G**
Adjustment temperature range		40~100℃*1.*2.		15~55℃*1.*2.
Applicable ambient temperature		Setting temperature −10℃ or below		Setting temperature +20℃ or below
Applicable fluid		Steam & Hot water		
Fluid to be heated		Water, oil & liquids		
Fluid temperature		Max. 184℃		
Length of capillary tube		2m(Available up to 5m)		
Seat type		Single seated		
Leakage allowance		Refer to table of leakage allowance		
End connection		Size 15~25mm:Flanged JIS 10KFF Size 32~40mm:Flanged JIS 5KFF		
Materials		Body(Cast iron), Disc & seat(Stainless steel), Bellows(Phosphor bronze) Thermo bulb (Stainless steel)		
Applicable pressure for thermo bulb		Max. 1.0MPa		
Pressure limit at inlet	**Size**	15~20(½″~¾″)	25(1″)	32~40(1¼″~1½″)
	(MPa)	1.0	0.7	0.5
Valve body pressure test		Hydraulic,1.5 times of flange rated pressure.		

* 1. Refer to below table of adjustable temperature range.
* 2. Adjustable temperature range 100~120℃(with standing temperature: 130℃) is available upon your request.
* 3. The protection cap for thermo bulb, with non-standard dimension is available upon your request.

CONSTRUCTION

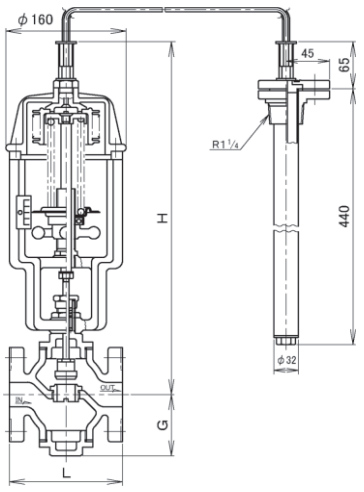

DIMENSIONS

(mm)

Size	L	G	H	Cv value	Mass(kg)
15(½″)	126	55	470	1.5	13
20(¾″)	130	55	470	1.5	13
25(1″)	130	60	475	3	15
32(1 ¼″)	180	85	510	4	21
40(1 ½″)	180	85	510	4	22

Size 15~25mm:Flange code JIS 10KFF
Size 32~40mm:Flange code JIS 5KFF

ADJUSTABLE TEMPERATURE RANGE

Heating		Low temp heating	
Adjustable temp. range	Withstanding temperature	Adjustable temp. range	Withstanding temperature
40~60℃	70℃	15~35℃	50℃
50~70℃	80℃	20~40℃	
60~80℃	90℃	35~55℃	70℃
70~90℃	100℃		
80~100℃	110℃		

* Other than the above temperature range items are available upon your request.

TEMPERATURE SET ERROR

(In case of 2m of length of capillary tube)

Heating		Low temp heating
A	B	
±2℃	±3℃	±3.5℃

* A: In case of Max. 100℃ or less for adjustable temperature range.
B: In case of exceeding 100℃ in all or part of adjustable temperature range.

LEAKAGE ALLOWANCE

(g/min or mL/min)

Size(mm)	15	20	25	32	40
TD-4 Type	2	2	2	3	4
TD-4L Type	4	4	4	6	8

* Reading in g/min for testing fluid STEAM.
Reading in mL/min for testing fluid WATER.

HOW TO USE THE CHART

Under the following conditions:
Primary pressure: 0.2MPa
Flow of saturated steam: 50kg/h
Differential pressure: 0.05MPa

Obtain point A (where the 0.2MPa primary pressure line intersects with the 0.05MPa differential pressure line) and point B (intersection point acquired using 50kg/h flow line). Since point B is located between lines size 15/20mm and size 25mm, the size 25mm is selected.

If the steam temperature is 180℃, the first thing is to find the degree of superheat.

Since degree of superheat = temperature of superheat steam-temperature of saturated steam, Degree of superheat : 180℃−132.9℃=47.1℃. Draw a vertical line from point A until it intersects with the benchmark line. The intersection point is named C. Move from point C parallely along the superheat line (47.1℃) to decide point D. Using point D, it is able to decide point E, where the line intersects with flow line (50kg/h). Since point C is located between lines size 15/20mm and size 25mm, the larger one, 25mm, is selected.

See Page 278 for temperature of saturated steam.

SIZE SELECTION CHART (for Steam)

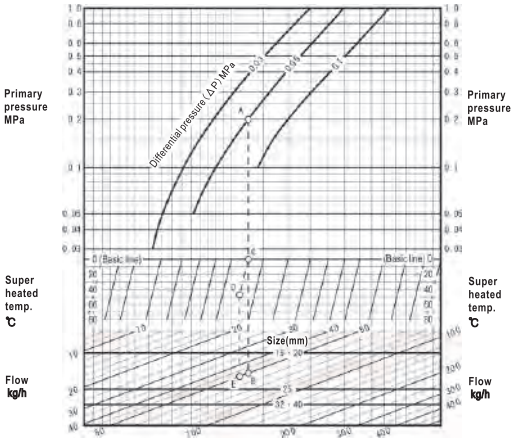

NOISELESS HEATERS
VACUUM BREAKER

7

Noiseless heaters reduce noise and vibration that occur when steam is blown into water for making hot water.

Vacuum breaker can introduce air into pipes or devices to prevent formation of vacuum when there may occur negative pressure.

■ NOISELESS HEATERS

Model name	End connection	Size	Applicable pressure (MPa)	Applicable fluid	Materials	Warning sound temperature limit (℃)	Page
QH-1	Screwed	15~80(½″~3″)	Max. 0.7	Steam	Cast bronze or Stainless steel	66	136
QH-2	Screwed	15~80(½″~3″)	Max. 0.7	Steam	Cast bronze or Stainless steel	95	137
QH-3	Screwed	15~50(½″~2″)	Max. 0.7	Steam	Stainless steel	95	138

■ VACUUM BREAKER

Model name	End connection	Size	Applicable pressure (MPa)	Applicable fluid	Materials	Set pressure	Page
VD-1H	Screwed	15~50(½″~2″)	Max. 1.0	Steam or air	Brass(Cast bronze) or Stainless steel	Refer to specifications	139

QH-1 Type Noiseless Heater

This product can be used to reduce noise and vibration that occur when steam is blown into water for making hot water. It can also be used for heating bathtubs or other open type hot water tanks (66°C or below).

SPECIFICATIONS

Model name	QH-1	
Code name	QH1-F	QH1-D
Applicable fluid	Steam	
Applicable pressure	Max. 0.7MPa	
Warning sound temperature limit	66℃	
End connection	Screwed JIS Rc	
Materials	Cast bronze	Stainless steel

DIMENSIONS

(mm)

Size	15(½″)	20(¾″)	25(1″)	32(1¼″)	40(1½″)	50(2″)	65(2½″)	80(3″)
A	54	62	75	93	110	140	155	180
B	54	63	75	91	109	130	154	170
C	25	31	37	45	50	65	85	88
d	½″	¾″	1″	1¼″	1½″	2″	2½″	3″
Mass(kg)	0.36	0.55	0.86	1.8	2.4	4	11	14

PIPING EXAMPLE

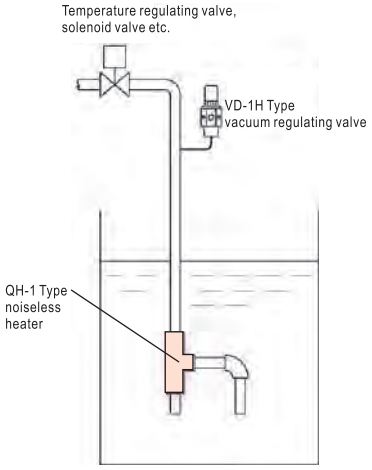

Note: 1.Submerge the noiseless heaters into water.
2.Install VD-1H Type vacuum breaker for preventing backflow of water that may occur when steam supply is stopped.

CAPACITY CHART

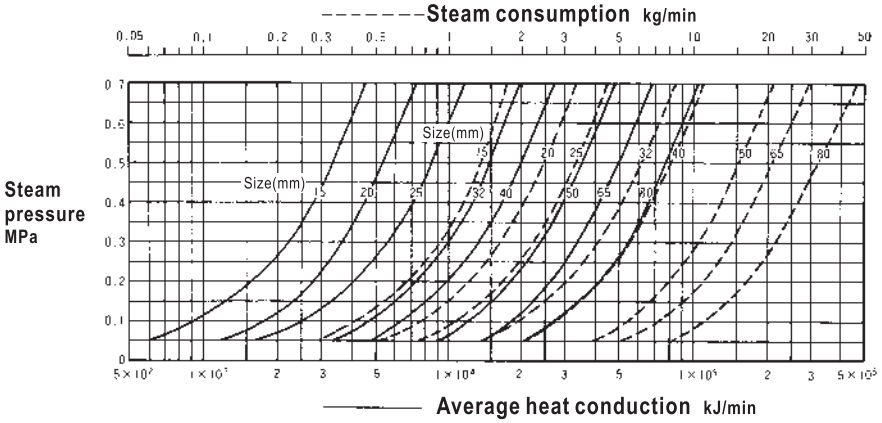

HOW TO USE THE CHART

The dashed line (– – –) stands for steam consumption.
The solid line (——) stands for average heat conduction.



CONSTRUCTION

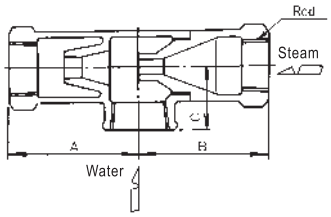

Depending on the size and material of valve, the structure may vary.

QH-2 Type Noiseless Heater

This product can be used to reduce noise and vibration that occur when steam is blown into water for making hot water. It can also be used for heating bathtubs or other open type hot water tanks (95°C or below).



SPECIFICATIONS

Model name	QH-2	
Code name	QH2-F	QH2-D
Applicable fluid	Steam	
Applicable pressure	Max. 0.7MPa	
Warning sound temperature limit	95℃	
End connection	Screwed JIS Rc	
Materials	Cast bronze	Stainless steel

DIMENSIONS

(mm)

Size	15(½″)	20(¾″)	25(1″)	32(1¼″)	40(1½″)	50(2″)	65(2½″)	80(3″)
A	70	94	133	175	204	229	260	280
B	57	72	195	113	137	156	180	200
d	½″	¾″	1″	1¼″	1½″	2″	2½″	3″
Mass(kg)	0.36	0.77	1.8	3.2	4.3	7.4	11.2	14

PIPING EXAMPLE

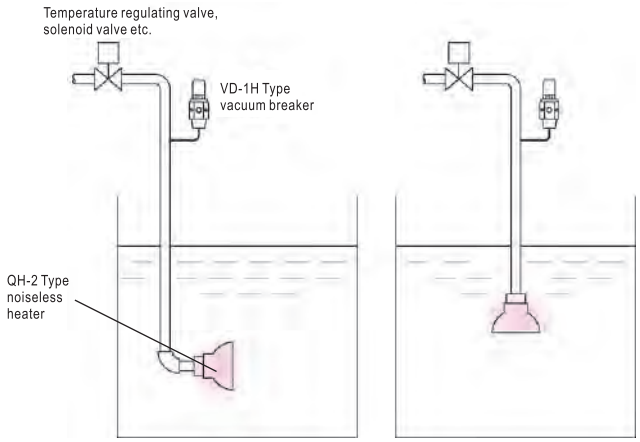

Note: 1.Install noiseless heater at least 300mm away from the wall or bottom of the tank.
2.Install VD-1H Type vacuum breaker for preventing backflow of water that may occur when steam supply is stopped.

CAPACITY CHART

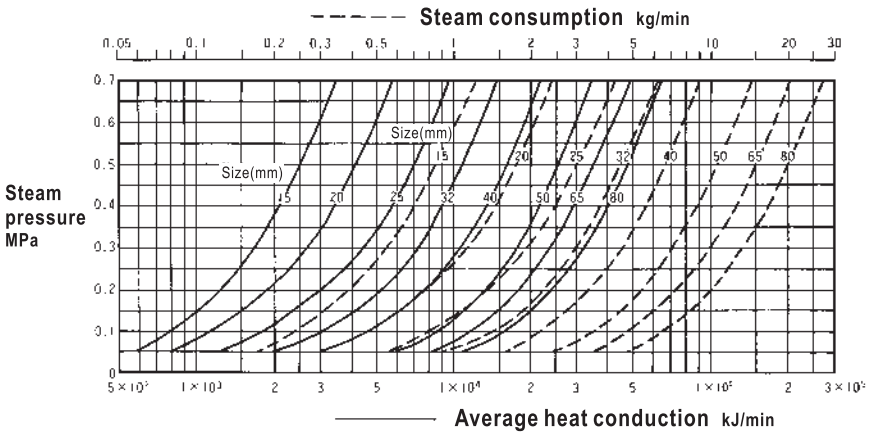

CONSTRUCTION

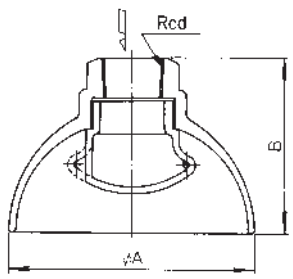

Depending on the size and material of valve, the structure may vary.

HOW TO USE THE CHART

The dashed line (– – –) stands for steam consumption.
The solid line (——) stands for average heat conduction.

QH-3 Type Noiseless Heater

This product can be used to reduce noise and vibration that occur when steam is blown into water for making hot water. It can also be used for heating bathtubs or other open type hot water tanks (95℃ or below). It is compact and has large heat conduction with sectional plane similar to that of lotus root.



SPECIFICATIONS

Model name	QH-3
Code name	**QH3-D**
Applicable fluid	Steam
Applicable pressure	Max. 0.7MPa
Warning sound temperature limit	95℃
End connection	Screwed JIS Rc
Materials	Stainless steel

DIMENSIONS

(mm)

Size	d	A	B	C	Mass(kg)
15(½″)	½″	50	34	32	0.21
20(¾″)	¾″	53	40	38	0.28
25(1″)	1″	60	48	46	0.5
32(1¼″)	1¼″	63	65	55	1
40(1½″)	1½″	65	75	63	1.4
50(2″)	2″	70	110	95	3.4

PIPING EXAMPLE

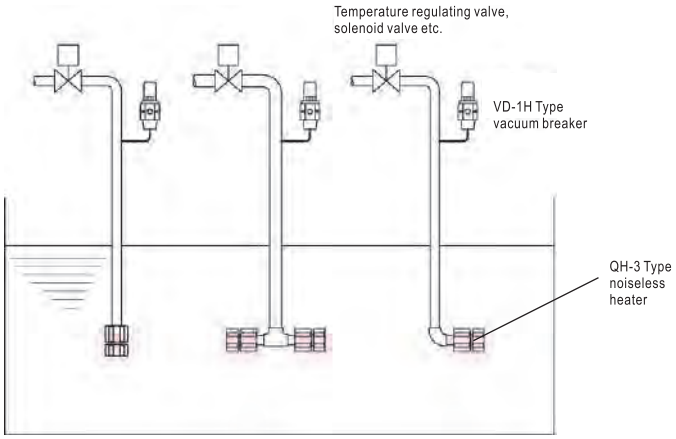

Note:
1. Install noiseless heater at least 300mm away from the wall or bottom of the tank.
2. Install VD-1H Type vacuum breaker for preventing backflow of water that may occur when steam supply is stopped.

CAPACITY CHART

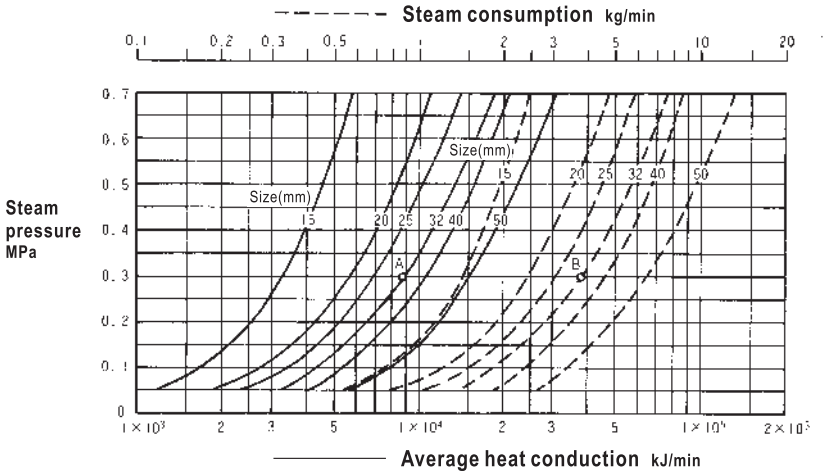

CONSTRUCTION

Size 15~25mm

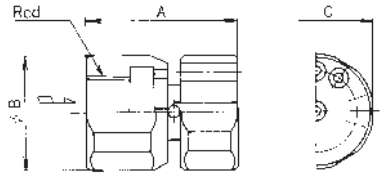

Size 32~50mm

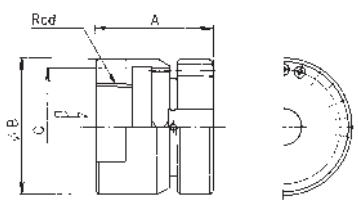

Depending on nominal diameter, the structure of the valve may be different from what is shown in the drawing.

HOW TO USE THE CHART

Where, size is 32mm and steam pressure 0.3MPa, the average heat conduction (solid line ———), as shown by point A, is 8820kJ/min, and steam consumption (dashed line – – –), as shown by point B, is 3.8kg/min.
The time to heat 700ℓ water from 20℃ to 80℃ will be:

$$\frac{4.2\times(80-20)\times700}{8820}=20(\text{minutes})$$

The steam consumption will be: 3.8×20=76 kg

VD-1H Type Vacuum Breaker

When the pressure gets down to the negative pressure below the set-press., the vacuum breaker will open to absorb air and prevent formation of vacuum in pipe or device. Installation of this item in steam pipeline with noiseless heater will prevent absorption of water that may occur when steam supply is stopped.



■ CONSTRUCTION

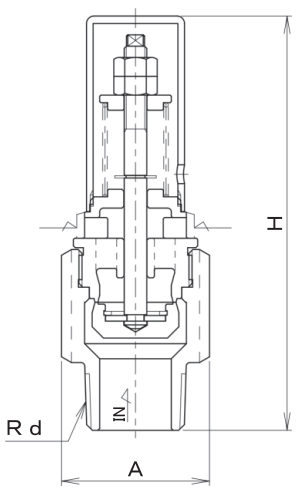

Depending on nominal diameter, the structure of the valve may be different from what is shown in the drawing.

■ SPECIFICATIONS

Model name	VD-1H	
Code name	VD1H-F□	VD1H-D□
	※ 1, 2, 3 or 4 for adjustable pressure range No. is required in □.	
Applicable fluid	Steam & air	
Fluid temperature	Max. 200℃	
Applicable pressure	Max. 1.0MPa	
Adjustable pressure range	1:−0.5 ~ −22kPa, 2:−22 ~ −49kPa, 3:−49 ~ −76kPa, 4:−76 ~ −82kPa	
End connection	Screwed JIS R	
Materials	Brass or Cast bronze	Stainless steel

■ DIMENSIONS

(mm)

Size	d	A	H	Mass(kg)
15(½″)	½″	Hexa. 34×39.3	110	0.4
20(¾″)	¾″	Hexa. 34×39.3	110	0.4
25(1″)	1″	Hexa. 34×39.3	110	0.6
32(1¼″)	1¼″	Hexa. 50×57.7	107	0.8
40(1½″)	1½″	Hexa. 55×63.5	122	1.1
50(2″)	2″	Hexa. 68×78.5	153	1.9

■ FLOW CHART

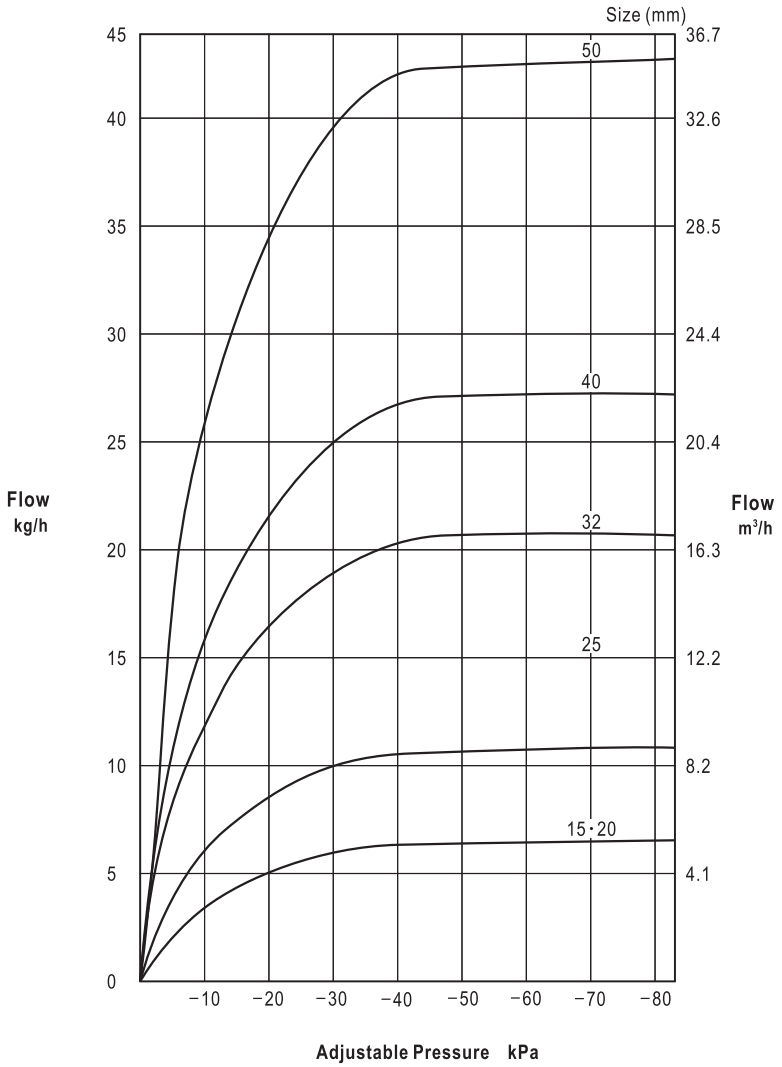

MEMO

STEAM TRAPS
DRAIN SEPARATOR
AIR TRAP
SIGHT GLASS

8

Steam traps can retain steam in steam pipeline or machine and discharge unnecessary drain. In doing so, they can prevent decrease of heat exchange and the occurrence of problems such as water hammer etc.
To select the most suitable steam trap, considerations must be paid on the actual conditions.
Drain separators are able to separate water drops or drain occurred in steam/air pipeline efficiently.
Air traps can discharge water drops or drain from air pipeline automatically.
Sight glasses are ideal products for checking fluid in pipeline.

■ THERMOSTATIC TYPE

Model name	End connection	Size	Applicable pressure(MPa)	Materials		Page
				Body	Trim	
AT-1A,1S	Screwed	15~25(½″~1″)	Max. 100kPa	Cast bronze	Brass	142
AT-4A,4S	Screwed	15·20(½″·¾″)	Max. 0.35	Cast bronze	Stainless steel	143
ATB-5	Screwed	15~25(½″~1″)	Max. 1.0	Cast iron	Stainless steel	144
ATB-5F	Flanged	15~50(½″~2″)				
AT-6	Screwed	15~25(½″~1″)	Max. 1.0	Mild steel or Stainless steel	Stainless steel	146
AT-6F	Flanged					
AT-6FB	Flanged	15~25(½″~1″)	0.07~1.0	Mild steel or Stainless steel	Stainless steel	147

■ DISC TYPE

Model name	End connection	Size	Applicable pressure(MPa)	Materials		Page
				Body	Trim	
AD-17	Screwed	15~25(½″~1″)	0.03~1.6	Stainless steel	Stainless steel	148
AD-17F	Flanged					
AD-18	Screwed	15~50(½″~2″)	0.1~2.0	Stainless steel	Stainless steel	149
AD-18F	Flanged					

■ INVERTED BUCKET TYPE

Model name	End connection	Size	Applicable pressure(MPa)	Materials		Page
				Body	Trim	
AK-1H	Screwed	15~25(½″~1″)	0.035~0.7	Cast iron	Stainless steel	150
			0.035~1.0			
AK-2H	Flanged	32~80(1¼″~3″)	0.02~0.7	Cast iron	Stainless steel	151
		32~50(1¼″~2″)	0.02~1.0			
AK-5	Screwed	15~25(½″~1″)	0.01~2.0	Ductile cast iron	Stainless steel	152
AK-5F	Flanged					
AK-16	Screwed	15~25(½″~1″)	0.01~1.6	Stainless steel	Stainless steel	153

■ FLOAT TYPE

Model name	End connection	Size	Applicable pressure(MPa)	Materials		Page
				Body	Trim	
AF-12	Screwed	15~25(½″~1″)	Max. 0.4	Cast iron	Stainless steel	154
AF-15F	Flanged	20~50(¾″~2″)	Max. 0.9 or 0.4	Cast iron or Ductile cast iron	Stainless steel	155
AF-16F	Flanged	50(2″)	Max. 0.9	Cast iron	Stainless steel	156
AF-11H	Screwed	15~50(½″~2″)	Max. 0.5	Cast iron	Stainless steel	157
AF-11HF	Flanged	65·80(2½″·3″)	Max. 0.35	Cast iron	Stainless steel	158
AF-20F	Flanged	25~50(1″~2″)	Max. 1.0	Ductile cast iron	Stainless steel	159

■ STEAM TRAP SILENCERS(FOR OUTLET SIDE OF STEAM TRAP)

Model name	End connection	Size	Applicable pressure(MPa)	Materials	Page
BH-1	Screwed	15~25(½″-1″)	Max. 1.6	Mild steel or Stainless steel	147

■ DRAIN SEPARATOR

Model name	End connection	Size	Applicable pressure(MPa)	Materials		Page
				Body	Trim	
BA-5	Screwed	15~50(½″~2″)	Max. 2.0(for steam) or Max. 0.98(for air)	Ductile cast iron	Ductile cast iron	160

■ AIR TRAP

Model name	End connection	Size	Applicable pressure(MPa)	Materials		Page
				Body	Trim	
AK-21	Screwed	15~25(½″~1″)	0.01~0.98	Cast iron	Stainless steel	162

■ SIGHT GLASS

Model name	End connection	Size	Applicable pressure(MPa)	Materials		Page
				Body	Trim	
BS-1,1A	Screwed	15~25(½″~1″)	Max. 1.0	Ductile cast iron	Ductile cast iron & Stainless steel	163
BS-2,2A			Max. 0.4			

AT-1A, 1S Type Radiator Trap

Bellows type Max. 100kPa
Trap for heater radiator

Bellows type radiator trap for Max. 100 kPa heater radiator can also be used as the pipe end trap for low pressure pipeline.



AT-1A Type



AT-1S Type

CONSTRUCTION

AT-1A Type

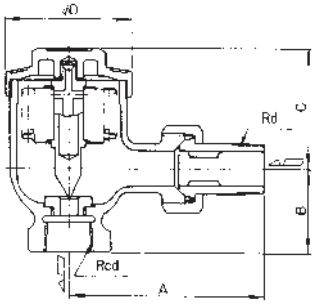

AT-1S Type

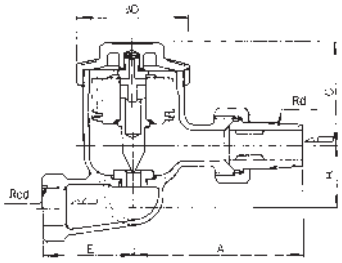

FEATURES

- Protects from freezing by the construction for no accumlation of drain.
- Rapidly discharge drain and air that occur when beginning of operation.

SPECIFICATIONS

Model name	AT-1A	AT-1S
Code name	**AT1A-F**	**AT1S-F**
Shape	Angle Type	Straight Type
Applicable fulid	Steam	
Fluid temperature	Max. 120℃	
Applicable pressure	Max. 100kPa	
End connection	Inlet:Screwed JIS R(Union joint), Outlet:Screwed JIS Rc	
Materials	Body(Cast bronze chrome plated), Disc & seat(Brass), Bellows(Phosphor bronze)	
Valve body pressure test	Hydraulic 200kPa(Bellows:Hydraulic 120kPa)	

DIMENSIONS AT-1A Type (Angle type)

(mm)

Size	d	A	B	C	D	Mass(kg)
15(½″)	½″	80	35	46	52	0.55
20(¾″)	¾″	87	41	52.5	57	0.72
25(1″)	1″	105	52	61.5	57	1.32

DIMENSIONS AT-1S Type (Straight type)

(mm)

Size	d	A	B	C	D	E	Mass(kg)
15(½″)	½″	80	28	48	52	43	0.66
20(¾″)	¾″	87	34	52.5	57	48	0.94
25(1″)	1″	105	40	64.5	57	60	1.56

FLOW CHART

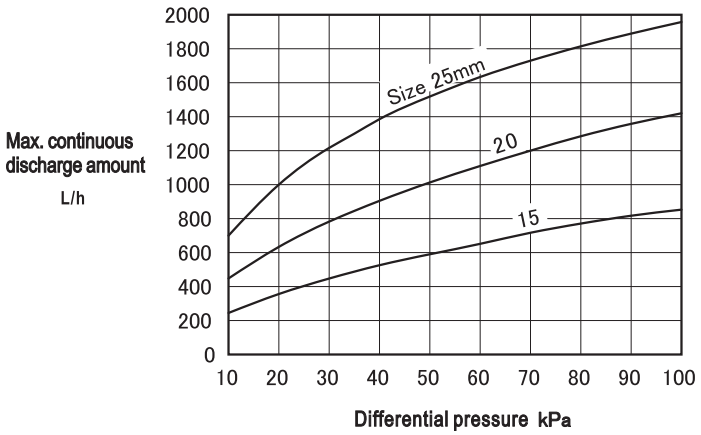

TABLE FOR CAPACITY (Max. continual discharge amount)

(L/h)

Size \ Differential pressure (kPa)	10	35	50	70	100
15(½″)	240	470	570	690	840
20(¾″)	430	830	1000	1190	1390
25(1″)	700	1300	1500	1740	1930

POINTS FOR SIZE SELECTION

Select a proper size that can meet the requirement on safety factor and allow at least 3 times of planned discharge amount.

In the case there is back pressure at the outlet side of trap, use the differential pressure between inlet and outlet sides to select the size of valve.

CAUTIONS ON INSTALLATION

- Confirm the direction of flow before installation.
- If union nipple is used, take cares not to damage the sealing surface between the product and the main body.
- Drain may accumulate in the valve if the outlet side piping is an ascending type. To prevent freezing in such case, install drain hole.

AT-4A, 4S Type Radiator Trap

Thermal wax type
MAX. 0.35MPa

Thermal wax type radiator trap for heater radiator Max. 0.35MPa can also be used as pipe end trap.



AT-4A Type



AT-4S Type

FEATURES

- Designed to prevent accumulation of drain in positive gradient piping, thus can prevent corrosion of pipe and freezing.
- Rapidly discharge drain and air when air supply starts.
- Rapidly close after drain is discharged.
- Hexagonal union pipe at inlet, allows easy installation.

SPECIFICATIONS

Model name	AT-4A	AT-4S
Code name	**AT4A-J**	**AT4S-J**
Shape	Angle Type	Straight Type
Applicable fulid	Steam	
Fluid temperature	Max. 150℃	
Applicable pressure	Max. 0.35MPa	
End connection	Inlet:Screwed JIS R(Union joint), Outlet:Screwed JIS Rc	
Materials	Body(Cast bronze), Disc & seat(Stainless steel)	
Valve body pressure test	Hydraulic 0.53MPa	

DIMENSIONS AT-4A Type (Angle type)

(mm)

Size	d	A	B	C	Mass(kg)
15(½″)	½″	80	35	49	0.53
20(¾″)	¾″	87	41	49	0.57

DIMENSIONS AT-4S Type (Straight type)

(mm)

Size	d	A	B	C	E	Mass(kg)
15(½″)	½″	80	28	49	43	0.6
20(¾″)	¾″	87	34	49	48	0.67

FLOW CHART

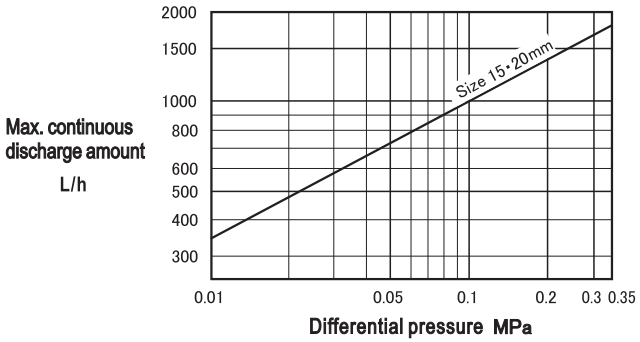

TABLE FOR CAPACITY (Max. continual discharge amount)

(L/h)

Differential pressure (MPa)	0.01	0.035	0.05	0.07	0.1	0.2	0.3	0.35
Discharge amount	350	620	730	850	1000	1370	1650	1800

CONSTRUCTION

AT-4A Type

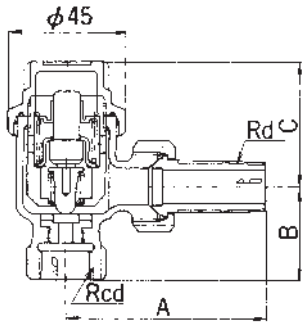

AT-4S Type

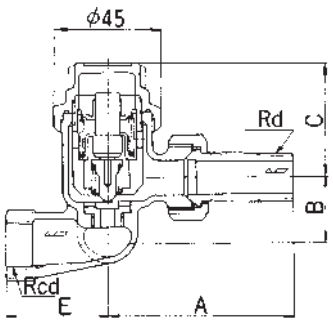

POINTS FOR SIZE SELECTION

Select a proper size that can meet the requirement on safety factor and allow at least 3 times of planned discharge amount.

In the case there is back pressure at the outlet side of trap, use the differential pressure between inlet and outlet sides to select the size of valve.

CAUTIONS ON INSTALLATION

- Confirm the direction of flow before installation.
- If union nipple is used, take cares not to damage the sealing surface between the product and the main body.
- Drain may accumulate in the valve if the outlet side piping is an ascending type. To prevent freezing in such case, install drain hole.

REPLACING THERMAL UNIT

Remove the cap and replace thermal unit.

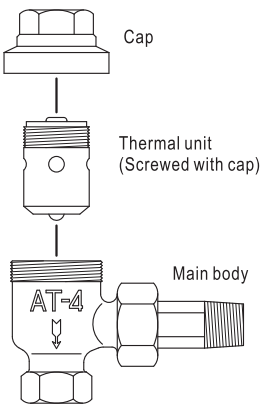

ATB-5, 5F Type Steam Trap

for Pipeline, Header, etc.

Thermo static
Max. 1.0MPa

Thermstatic trap ATB-5 Type is a compact structure with triple functions, including trap, bypass and stop valve functions, for realizing effective utilization of space and cost reduction.



ATB-5 Type



ATB-5F Type



Switching lever fixing type



Switching lever (during installation)

FEATURES

- Large discharge amount, suitable for pipe end or large equipment.
- Free installation in vertical, horizontal or lateral style [1].
- Operate at 10℃[2] below the temperature of saturated steam, prevent discharge of steam and idle operation of valve, and contribute to energy saving.
- Size 32~50mm valves have removable disc and are highly air tight and durable.
- Test valve can be installed on trap directly.

Note:
1) Size 32~50mm valves must be installed vertically to horizontal pipe.
2) Size 32~50mm valves start to operate at 15℃ below temperature of saturated steam.

SPECIFICATIONS

Model name	ATB-5	ATB-5F
Code name	**ATB5-G**	**ATB5F-G**
Type	Thermostatic	
Size	15・20・25(½″・¾″・1″)	15~50(½″~2″)
Applicable fluid	Saturated steam*1.	
Fluid temperature	Max. 184℃	
Applicable pressure	Max. 1.0MPa	
End connection	Screwed JIS Rc	Flanged JIS 10KFF
Materials	Body(Cast iron), Disc & Seat(Stainless steel), Cock(Cast bronze), Thermo element (Stainless steel)	
Allowed back pressure	Within 50% of pressure on inlet side(Minimum pressure difference:0.03MPa)	
Valve body pressure test	Steam:1.5MPa, Water:0.5MPa	

*1. The valve can not be used for super heated steam line.
*2. Please install products with size 32~50mm uprightly.

TABLE FOR CAPACITY (Max. continual discharge amount)

(L/h)

Size	Differential pressure(MPa)	0.03	0.05	0.1	0.2	0.3	0.4	0.5	0.6	0.7	0.8	0.9	1.0
15~25mm (½″~1″)	Water	650	900	1350	1900	2400	2800	3150	3400	3700	3900	4150	4300
	Hot water of saturated steam temperature−20℃	600	800	1150	1700	2100	2400	2700	2950	3150	3300	3450	3550
32~50mm (1¼″~2″)	Water	1450	1870	2650	3750	4600	5310	5940	6510	7030	7510	7970	8400
	Hot water of saturated steam temperature−25℃	1340	1650	2250	3150	3830	4360	4800	5160	5470	5750	6000	6250

CONSTRUCTION (Unit:mm)

ATB-5 Type

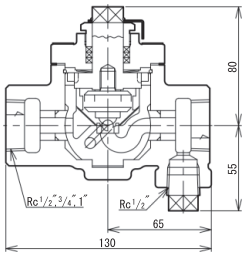

Weight:3.1kg

ATB-5F Type (Size 15~25mm)

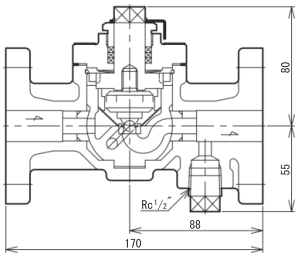

ATB-5F Type(Size 32~50mm)

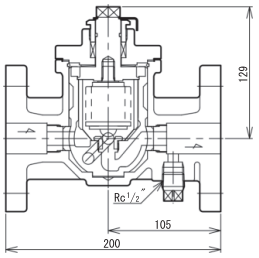

MASS (ATB-5F Type)

Size	Mass(kg)
15(½″)	4.2
20(¾″)	4.5
25(1″)	5.8
32(1¼″)	10
40(1½″)	11
50(2″)	12

FLOW CHART

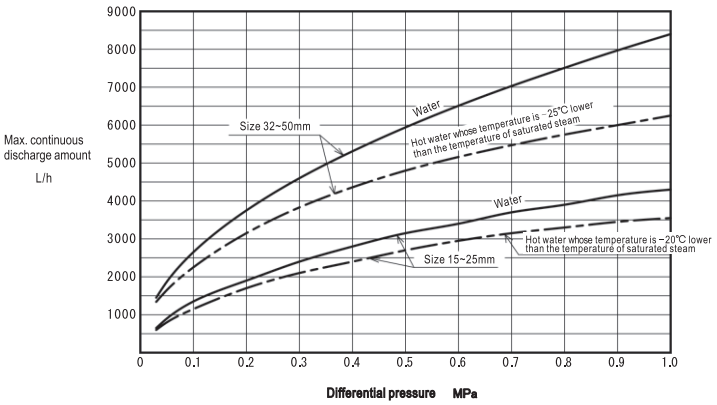

POINTS FOR SELECTION

1. Generally, hot water whose temperature is 20℃ lower than the temperature of saturated steam (for size 15~25mm valves) and hot water whose temperature is 25℃ lower than the temperature of saturated steam (for size 32~50mm valves) are used to decide the discharge amount of steam trap.
2. Select a proper size that can meet the requirement on safety factor and allow at least 3 times of planned discharge amount.
3. In the case there is back pressure at the outlet side of trap, use the differential pressure between inlet and outlet sides to select the size of valve. The allowed back pressure is up to 50% of the pressure of inlet side.
4. If the discharge amount of one valve is not enough, use multiple valves or select other types of valves.

DATA/ATB-5, 5F Type Steam Trap

STEAM TRAP

⊕ Stop valve
⊕ Bypass
Triple functions

	BY-PASS	STOP	TRAP
Function		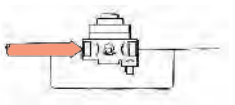	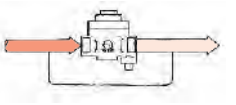
Handle position (Top view)	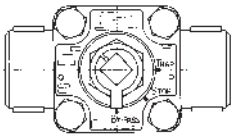		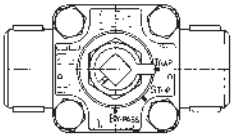
Passage within trap (Front view)		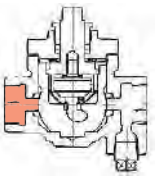	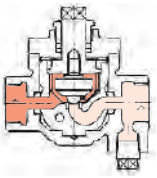

PIPING EXAMPLE

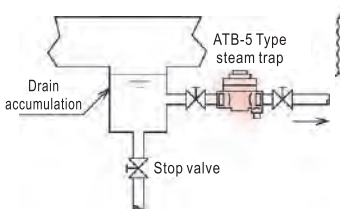

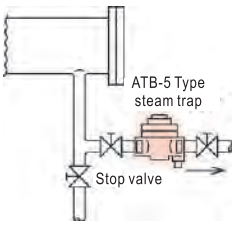

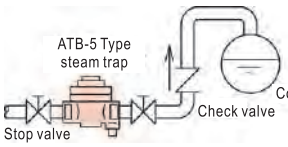

Note: Do not apply thermal insulation on steam trap. Make sure it is installed on a bare pipe at least 1 meter from heat-releasing equipments.

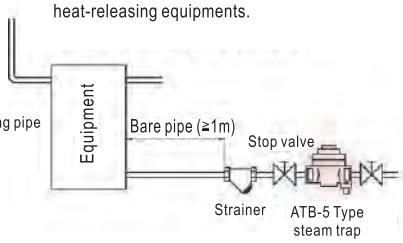

POINTS FOR INSTALLATION

① The arrow mark must match with the direction of drain flow. The position of the trap should be as low as possible to allow drain flow into the trap. Make sure the handle is at the STOP position.

② The inlet pipe should be naked pipe that is at least 1m in length. The trap should not be applied with any thermal insulation.

③ When installing trap on the main steam pipe, install a separator (for drain accumulation) with the same diameter as of the main pipe.

④ In the event the outlet piping is ascending type, install check valve at the outlet side, and make sure discharge the drain into pipe or device from top.

⑤ When making the initial aeration, switch the handle to BY-PASS position and blow off dirt or scale in the pipe. Then switch the handle to TRAP (steam trap) position and start normal operation.

⑥ If test valve is necessary for conforming operation or freezing prevention, install the test valve at the plug (Rc½″screw). In the event there is risk of freezing or the valve has not been used for a long time, discharge drain completely after the operation.

⑦ Leave sufficient space for maintenance or disassembly. When disassembling,switch the handle to STOP position. Make sure there is not steam pressure and the surface temperature is below 80℃ before disassemble. Do not turn the handle (cock) when disassembling.

⑧ When installing multiple steam traps at the same position, the height of the inlet side of each trap should be the same.

⑨ Steam trap should not be installed at a place where temperature is higher than the temperature of drain discharged.

⑩ There must be strainer at the inlet side of steam trap.

⑪ Close the valve if the thermo element of steam trap is damaged.

⑫ If the discharge side of steam trap faces open air, cares should be taken to avoid any danger that may occur in such case. In addition, install BH-1 silencer to reduce noise.

⑬ Do not apply any thermal insulation on steam trap.

Note: Read POINTS FOR SIZE SELECTION AND INSTALLATION carefully (see Page 165).

AT-6, 6F Type Steam Trap

for Pipeline, Header, etc.

Thermostatic
Max. 1.0MPa

AT-6 Type series of thermostatic type that can rapidly discharge air and drain during beginning of steam supply, and allow effective utilization of steam and save energy instead of disc trap.



AT-6 Type



AT-6F Type

FEATURES

- Stainless steel thermal element, highly corrosion resistant and durable.
- Free installation, vertically, horizontally or laterally.
- Operate at a temperature 10℃ lower than the temperature of saturated steam. No discharge of raw steam or idle running of valve disc. Energy saving.

SPECIFICATIONS

Model name		AT-6		AT-6F	
Code name		AT6-N	AT6-D	AT6F-N	AT6F-D
Type		Thermostatic			
Size		15・20・25(½″・¾″・1″)			
Applicable fluid		Saturated steam*1.			
Fluid temperature		Max. 184℃			
Applicable pressure		Max. 1.0MPa			
End connection		Screwed JIS Rc		Flanged JIS 10KFF*2.	
Materials	Body	Mild steel	Stainless steel	Mild steel	Stainless steel
	Trim	Disc & Seat(Stainless steel), Thermo element(Stainless steel)			
Allowed back pressure		Within 50% of pressure on inlet side(Minimum pressure difference:0.03MPa)			
Valve body pressure test		Steam:1.5MPa, Water:0.5MPa			

*1. The valve can not be used for super heated steam line.
*2. Stainless steel body with Flanged JIS 10KRF is available.

CONSTRUCTION (Unit:mm)

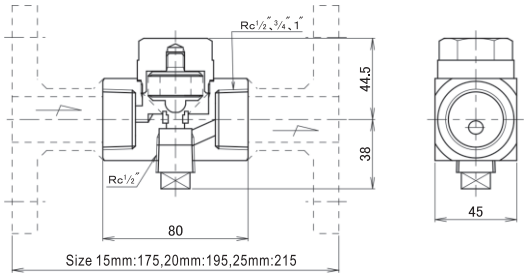

MASS

(kg)

Model name \ Size	15(½″)	20(¾″)	25(1″)
AT-6	1.4	1.3	1.2
AT-6F	2.7	3	3.9

TABLE FOR CAPACITY (Max. continual discharge amount)

(L/h)

Differential pressure (MPa)		0.03	0.05	0.1	0.2	0.3	0.4	0.5	0.6	0.7	0.8	0.9	1.0
Discharge amount	Water	450	630	940	1330	1680	1960	2200	2380	2590	2730	2900	3010
	Hot water of saturated steam temperature−20℃	420	560	800	1190	1470	1680	1890	2060	2200	2310	2410	2480

*At the sizing , take into consideration of safety factor to select the size to have 3 times as much or more capacity of required capacity, discharging from the steam trap at a hot water temperature of saturated steam temperature −20℃.

PIPING EXAMPLE

Note: Do not apply thermal insulation on steam trap. Make sure it is installed on a bare pipe at least 1 meter from heat-releasing equipments.

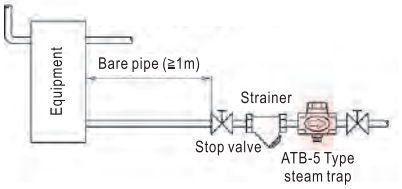

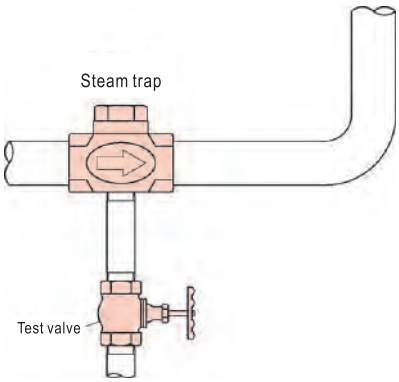

FLOW CHART(Size 15~25mm)

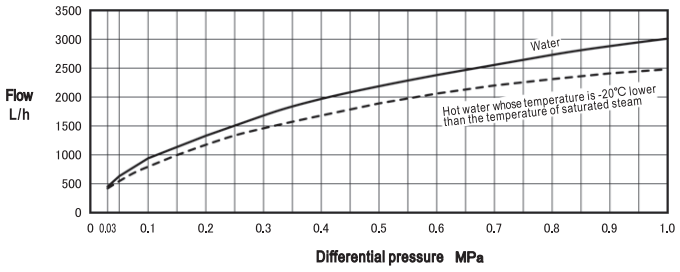

POINTS FOR INSTALLATION

1. The arrow mark on the name plate must match with the direction of drain flow.
2. Make sure steam trap is installed on a bare pipe at least 1 meter from heat-releasing equipments.
3. Do not apply any thermal insulation on steam trap.
4. Do not install steam trap to any machine that is equipped with solenoid valve allowing fast opening/closing.
5. To discharge drain generated during operation test or after the machine is stopped, install test valve at Rc½″ plug, which is at the lower part of steam trap.
6. In cold area with risk of freezing, install proper piping to prevent drain from accumulating.
7. Close valve if thermo element of steam trap is damaged.

Note: Read POINTS FOR SIZE SELECTION AND INSTALLATION carefully (see Page 165).

AT-6FB Type Steam Trap for Non-Freezing

for Pipeline, Header, etc.

Thermostatic
0.07~ 1.0MPa

AT-6F Type steam strap with non-freezing valve embedded at inlet side. Suitable for applications in cold area.

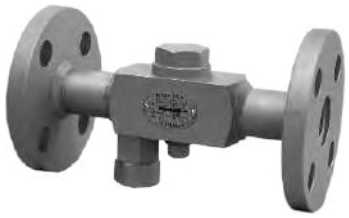

CONSTRUCTION

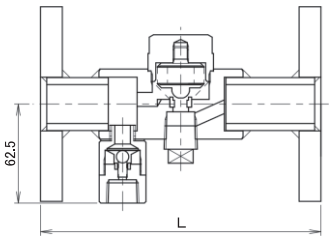

DIMENSIONS

(mm)

Size	L
15(½″)	175
20(¾″)	195
25(1″)	215

Refer to Page 146 for TABLE FOR CAPACITY and PIPING EXAMPLE of AT-6,6F Type.

FEATURES

- Initial operation, rapidly discharge drain and air.
- Mild steel or stainless steel bodies available.
- Pressure type, non-freezing valve embedded at inlet side.

SPECIFICATIONS

Model name		AT-6FB	
Code name		AT6FB-N	AT6FB-D
Type		Thermostatic	
Size		15・20・25(½″・¾″・1″)	
Applicable fluid		Saturated steam*1.	
Fluid temperature		Max. 184℃	
Applicable pressure		0.07~1.0MPa	
End connection		Flanged JIS 10KFF*2.*3(Non-freeze valve at outlet side:Screwed JIS Rc ½″)	
Materials	Body	Mild steel	Stainless steel
	Trim	Disc & Seat(Stainless steel), Thermo element(Stainless steel)	
Allowed back pressure		Within 50% of pressure on inlet side(Minimum pressure difference:0.03MPa)	
Non-freeze valve opening pressure		0.02±0.005MPa	
Non-freeze valve close pressure		0.03±0.005MPa	

＊1. The valve can not be used for super heated steam line.
＊2. Stainless steel body with flange will be flanged JIS 10KRF.
＊3. AT-6B Type of screwed type is available upon your request.

POINTS FOR INSTALLATION

1. The arrow mark on the name plate must match with the direction of drain flow.
2. Make sure steam trap is installed on a bare pipe at least 1 meter from heat-releasing equipments.
3. Do not apply any thermal insulation on steam trap.
4. Do not install steam trap to any machine that is equipped with solenoid valve allowing fast opening/closing.
5. To discharge drain generated during operation test or after the machine is stopped, install test valve at Rc½″ plug, which is at the lower part of steam trap.
6. Close valve if thermo element of steam trap is damaged.

Note: Read POINTS FOR SIZE SELECTION AND INSTALLATION carefully (see Page 165).

BH-1H Type Steam Trap Silencers

BH-1 Type steam trap silencers can reduce noise that occurs when drain is discharged.



PIPING EXAMPLE

● Direct discharge

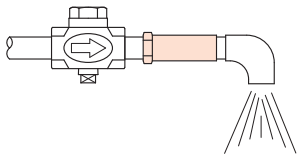

● Indirect discharge

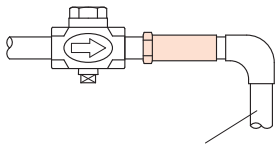

The pipe should lead to a safe place.
(Note: Do not allow back pressure on pipe)

FEATURES

- Can be connected to the outlet side of steam trap and discharge drain to safe place.
- Exclusive acoustic material developed by VENN, less pressure on steam trap and outstanding silencing effect.

SPECIFICATIONS

Model name		BH-1	
Code name		BH1-N	BH1-D
Usage		Outlet side of steam Trap	
Size		15・20・25(½″・¾″・1″)	
Applicable fluid		Drain	
Applicable pressure		Max. 1.6MPa	
End connection		Screwed JIS R and Screwed JIS Rc	
Materials	Body	Mild steel	Stainless steel
	Silencing effect	Stainless steel	

APPEARANCE

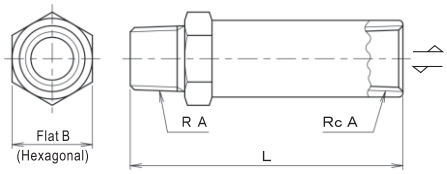

Without limitation of the direction of flow

DIMENSIONS

(mm)

Size	15(½″)	20(¾″)	25(1″)
L	133	133	133
d	½″	¾″	1″
B	35	35	41
Mass(kg)	0.42	0.42	0.6

AD-17, 17F Type Steam Trap

for Pipeline, Header, etc.

Disc type
0.03~1.6MPa

Rapidly discharge air and drain during initial aeration. Short startup time.

The chamber of drain retention and evaporation in the trap ensures stable performance.



AD-17 Type



AD-17F Type

FEATURES

- Stainless body and disc.
- Free installation, horizontally, vertically (outlet facing downwardly), or laterally.
- Wide range of applicable pressures for a variety of applications.

SPECIFICATIONS

Model name	AD-17	AD-17F
Code name	AD17-D	AD17F-N
End connection	Screwed JIS Rc	Flanged JIS 10 16KFF (common use)
Type	Thermo-dynamic type	
Applicable fluid	Steam	
Fluid temperature	Max. 220℃	
Applicable pressure	0.03~1.6MPa	
Materials	Body(Stainless steel), Cap(Ductile cast iron) Disc(Stainless steel)	Body(Stainless steel), Cap(Ductile cast iron) Disc(Stainless steel), Flange(Carbon steel)
Allowed back pressure	Within 50% of pressure on inlet side(Minimum pressure difference: 0.03MPa)	
Valve body pressure test	Hydraulic 2.4MPa	
Installation	Vertical line(Flowing from top to down) and horizontal line	

∗1. Strainer with 60 mesh is installed.
∗2. Valve body with non-freezing type is available for AD-17B, 17FB Type upon your request.

DIMENSIONS AD-17 Type

(mm)

Size	d	L	G	H	Mass(kg)
15(½″)	½″	98	32	80	1.8
20(¾″)	¾″	104	36	84	2
25(1″)	1″	112	39	87	2.1

DIMENSIONS AD-17F Type

(mm)

Size	L	G	H	Mass(kg)
15(½″)	175	32	80	3.1
20(¾″)	195	36	84	3.7
25(1″)	215	39	87	4.8

Flange code JIS 10K・16K FF

TABLE FOR CAPACITY (Max. continual discharge amount)

(L/h)

Differential pressure(MPa)	0.03	0.05	0.1	0.2	0.3	0.4	0.5	0.6
Discharge amount	40	100	180	320	430	500	550	650
Differential pressure(MPa)	0.7	0.8	0.9	1.0	1.2	1.4	1.6	
Discharge amount	700	750	780	800	850	880	900	

POINTS FOR INSTALLATION

Select a proper size that can meet the requirement on safety factor and allow at least 3 times of planned discharge amount.
Do not apply any thermal insulation on steam trap.
The differential pressure is the difference of pressure between inlet and outlet sides.

Note: Read POINTS FOR SIZE SELECTION AND INSTALLATION carefully (see Page 165).

CONSTRUCTION

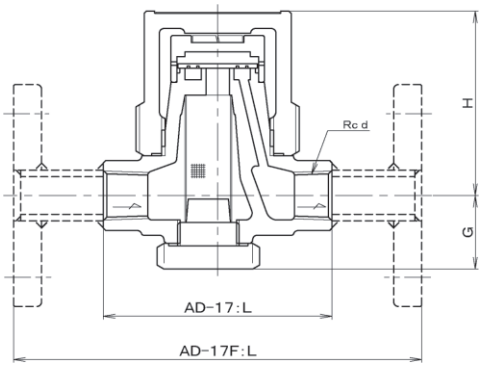

FLOW CHART (Size 15~25mm)

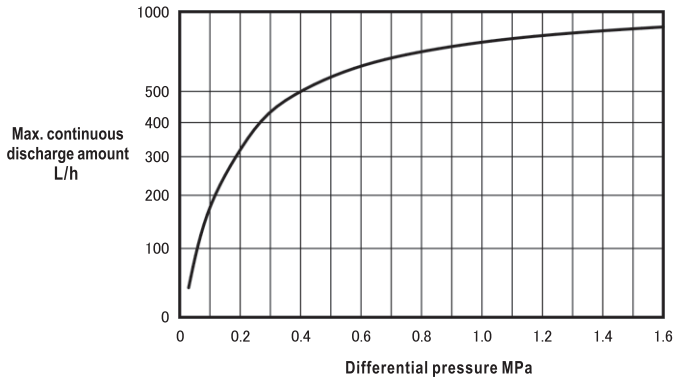

AD-18, 18F Type Steam Trap

for Pipeline, Header, etc.

Disc type
0.1~2.0MPa

Rapidly discharge air and drain during initial aeration. Short startup time.

The chamber of drain retention and evaporation in the trap ensures stable performance.



AD-18 Type
(Size 15~25mm)



AD-18 Type
(Size 32~50mm)

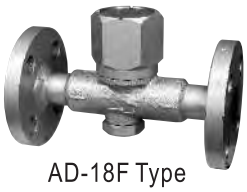

AD-18F Type
(Size 15~25mm)



AD-18F Type
(Size 32~50mm)

FEATURES

- Stainless body and disc.
- Free installation, horizontally, vertically (outlet facing downwardly), or laterally.
- Wide range of applicable pressures for a variety of applications.

SPECIFICATIONS

Model name	AD-18	AD-18F
Code name	AD18-D	AD18F-N
End connection	Screwed JIS Rc	Flanged JIS 20KFF*
Type	Thermo-dynamic type	
Applicable fluid	Steam	
Fluid temperature	Max. 220℃	
Applicable pressure	0.1~2.0MPa	
Materials	Body(Stainless steel), Cap(Mild steel) Disc(Stainless steel)	Body(Stainless steel), Cap(Mild steel) Disc(Stainless steel), Flange(Carbon steel)
Allowed back pressure	Within 50% of pressure on inlet side(Minimum pressure difference: 0.1MPa)	
Valve body pressure test	Hydraulic 3.0MPa	
Installation	Vertical line(Flowing from top to down) and horizontal line	

* Flanged JIS 20KRF is available upon your request.

DIMENSIONS (AD-18 Type)

(mm)

Size	d	L	G	H	Mass(kg)
15(½″)	½″	100	32	80	1.8
20(¾″)	¾″	105	36	84	2
25(1″)	1″	115	39	87	2.1
32(1¼″)	1¼″	130	48	74	3.3
40(1½″)	1½″	140	53	83	4.2
50(2″)	2″	170	64	102	7

DIMENSIONS (AD-18F Type)

(mm)

Size	L	G	H	Mass(kg)
15(½″)	175	32	80	3.3
20(¾″)	195	36	84	3.9
25(1″)	215	39	87	5.2
32(1¼″)	245	48	74	7.4
40(1½″)	260	53	83	8.6
50(2″)	265	64	102	13.3

Flange code JIS 20KFF

TABLE FOR CAPACITY (Max. continual discharge amount)

(L/h)

Size \ Differential pressure MPa	0.1	0.2	0.3	0.4	0.5	0.6	0.7	0.8
15~25(½″~1″)	120	220	310	370	420	470	510	540
32(1¼″)	450	600	720	840	950	1040	1140	1220
40(1½″)	750	900	1050	1200	1350	1470	1590	1690
50(2″)	1150	1350	1500	1640	1750	1840	1920	2000

Size \ Differential pressure MPa	0.9	1.0	1.2	1.4	1.6	1.8	2.0
15~25(½″~1″)	560	580	610	640	670	700	720
32(1¼″)	1310	1390	1500	1550	1600	1650	1700
40(1½″)	1740	1800	1870	1950	2000	2050	2100
50(2″)	2080	2150	2250	2330	2400	2450	2500

CONSTRUCTION

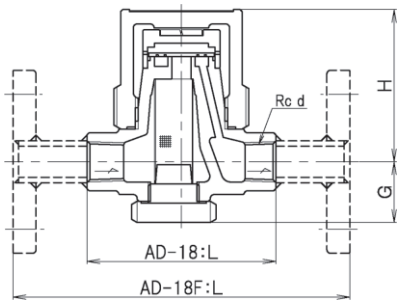

FLOW CHART

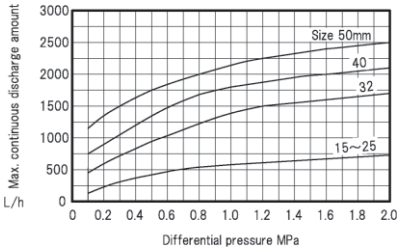

POINTS FOR INSTALLATION

Select a proper size that can meet the requirement on safety factor and allow at least 3 times of planned discharge amount.
Do not apply any thermal insulation on steam trap.
The differential pressure is the difference of pressure between inlet and outlet sides.

Note: Read POINTS FOR SIZE SELECTION AND INSTALLATION carefully (see Page 165).

AK-1H Type Steam Trap

Bucket type
0.035~1.0MPa

General purpose trap that can be used as drain discharge trap for pipeline, header etc. All functions set in the top cover, so that allow easy maintenance.

FEATURES

- Simple internal structure makes maintenance work easier.
- With strainer embedded.

SPECIFICATIONS

Type	0.7MPa	1.0MPa
Model name	AK-1H	
Code name	AK1H-GL	AK1H-GH
Applicable pressure	0.035~0.7MPa	0.035~1.0MPa
Applicable fluid	Steam	
Fluid temperature	Max. 184℃	
End connection	Screwed JIS Rc	
Materials	Body(Cast iron), Disc & Seat(Stainless steel), Bucket(Stainless steel)	
Valve body pressure test	Hydraulic 1.5MPa	

* In case of pressure being less than 0.035MPa or less than 0.1MPa with very small capacity, select the other type (AT-1, AT-4 or AF-12 Type).

DIMENSIONS

(mm)

Size	d	L_1	L_2	G	H	Mass(kg)
15(½″)	½″	130	76	72.5	68.5	2.7
20(¾″)	¾″	148	87	88	74	4.4
25(1″)	1″	184	94	98	81	5.8

TABLE FOR CAPACITY (Max. continual discharge amount)

(L/h)

Type	Size \ Differential pressure MPa	0.035	0.1	0.2	0.3	0.4	0.5	0.6	0.7	0.8	0.9	1.0
0.7MPa	15(½″)	80	130	175	205	230	252	270	287	—	—	—
	20(¾″)	175	260	340	398	444	485	522	555	—	—	—
	25(1″)	255	412	548	634	703	767	825	880	—	—	—
1.0MPa	15(½″)	50	84	110	130	146	160	173	180	195	205	214
	20(¾″)	80	130	175	205	230	252	270	287	305	320	335
	25(1″)	175	260	340	398	444	485	522	555	582	608	630

FLOW CHART

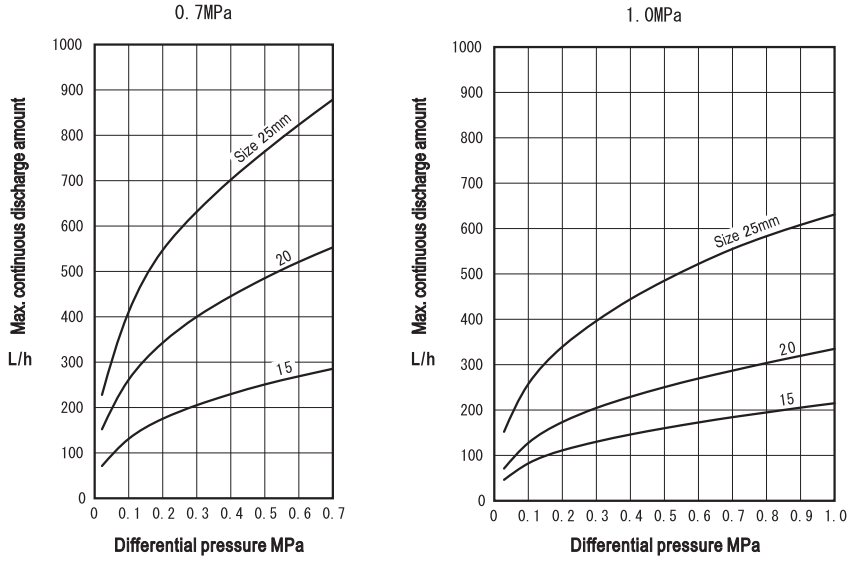



CONSTRUCTION

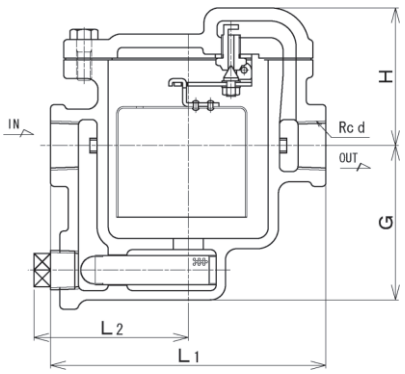

POINTS FOR SIZE SELECTION

Select a proper size that can meet the requirement on safety factor and allow at least 3 times of planned discharge volume.

In the case there is back pressure at the outlet side of trap, use the differential pressure between inlet and outlet sides to select the size of valve.

Note: Read POINTS FOR SIZE SELECTION AND INSTALLATION carefully (see Page 165).

AK-2H Type Steam Trap

Bucket type
0.02~1.0MPa
SSR device

General purpose trap that can be used as drain discharge trap for pipeline, header etc. All functions set in the top cover, so that allow easy maintenance.



Size 32~50mm



Size 65·80mm

FLOW CHART

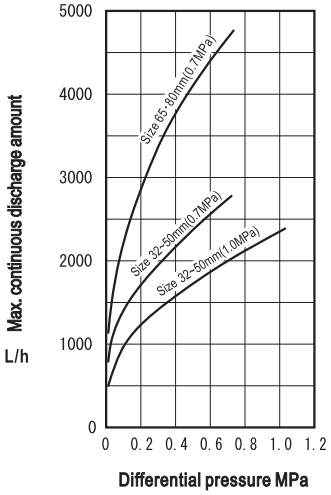

FEATURES(Size 32~50mm)

- The SSR (Shockless Self Return) device eliminates impact that may occur when valve is closed. The valve disc can close by itself, but not influenced by the buoyancy of the bucket, so that can be used from low pressure.
- With strainer embedded, for size 32~50mm.

SPECIFICATIONS

Type	0.7MPa		1.0MPa
Model name	AK-2H		
Code name	AK2H-GL		AK2H-GH
Size	32·40·50(1¼″·1½″·2″)	65·80(2½″·3″)	32·40·50(1¼″·1½″·2″)
Applicable pressure	0.02~0.7MPa		0.02~1.0MPa
Applicable fluid	Steam		
Fluid temperature	Max. 184℃*		
End connection	Flanged JIS 10KFF		
Materials	Body(Cast iron), Disc & seat(Stainless steel), Bucket(Stainless steel)		
Valve body pressure test	Hydraulic 1.5MPa		

* For fluid temperature Max. 220℃, please contact our agent in your area.

CONSTRUCTION

Size 32~50mm

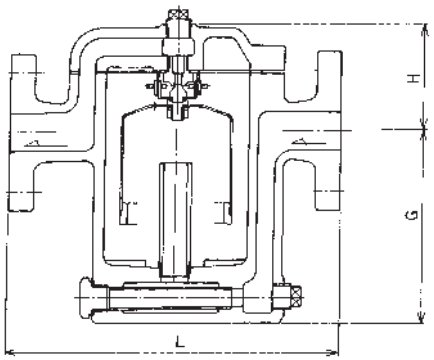

Size 65·80mm

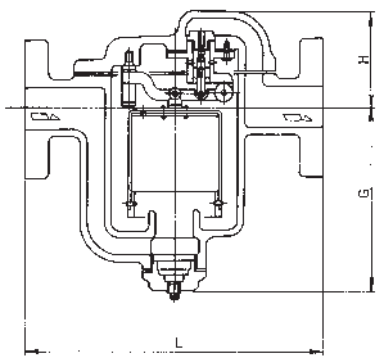

DIMENSIONS

(mm)

Size	L	G	H	Mass(kg)
32(1¼″)	280	161	88	21
40(1½″)	290	161	88	22
50(2″)	290	161	88	23
65(2 ½″)	480	340	160	87
80(3″)	480	340	160	90

TABLE FOR CAPACITY (Max. continual discharge amount)

(L/h)

Type	Differential pressure MPa / Size	0.02	0.05	0.1	0.2	0.3	0.4	0.5	0.6	0.7	0.8	0.9	1.0
0.7MPa	32·40·50(1¼″·1½″·2″)	800	1100	1370	1700	1940	2170	2380	2570	2750	—	—	—
	65·80(2½″·3″)	1120	1600	2150	2850	3400	3800	4130	4430	4700	—	—	—
1.0MPa	32·40·50(1¼″·1½″·2″)	500	750	950	1200	1400	1570	1740	1870	2000	2120	2240	2350

POINTS FOR SIZE SELECTION

Select a proper size that can meet the requirement on safety factor and allow at least 3 times of planned discharge volume.

In the case there is back pressure at the outlet side of trap, use the differential pressure between inlet and outlet sides to select the size of valve.

POINTS FOR INSTALLATION

- In the event the trap is to be left unused for a lon period or there is risk of freezing in winter, remove the plug at the lower part of the main body and discharge drain.
- If the piping at the outlet side is an ascending type (which means there is back pressure), install check valve at the discharge side of steam trap.
- Leave sufficient space for maintenance purpose.

Note: Read POINTS FOR SIZE SELECTION AND INSTALLATION carefully (see Page 165).

AK-5, 5F Type Steam Trap

for Small Machines・Equipments, High-pressure Steam Line, etc.

Small bucket type
0.01~2.0MPa
SSR device

Max.2.0MPa, small capacity bucket type steam trap for laundry machines, heating equipments, food processing equipments, and medical devices.



AK-5 Type



AK-5F Type

FEATURES

- The SSR (Shockless Self Return) device eliminates impact that may occur when valve is closed. The valve disc can close by itself, but not influenced by the buoyancy of the bucket. So that can be used wide pressure range.
- Compact body allows installation in narrow space.
- With strainer embedded.

SPECIFICATIONS

Type		0.3MPa Type	0.7MPa Type	1.0MPa Type	1.6MPa Type	2.0MPa Type
Model name	Screwed	AK-5				
	Flanged	AK-5F				
Code name	Screwed	AK5-ML	AK5-MM	AK5-MH	AK5-MS	AK5-MV
	Flanged	AK5F-ML	AK5F-MM	AK5F-MH	AK5F-MS	AK5F-MV
Size		15・20・25(½″・¾″・1″)				
Applicable pressure		0.01~0.3MPa	0.01~0.7MPa	0.01~1.0MPa	0.01~1.6MPa	0.01~2.0MPa
Applicable fluid		Steam				
Fluid temperature		Max. 184℃*			Max. 220℃	
End connection		AK-5:Screwed JIS Rc, AK-5F:Flanged JIS 10K・20KFF(common use)				
Materials		Body(Ductile cast iron), Disc & seat(Stainless steel), Bucket(Stainless steel)				
Valve body pressure test		Hydraulic 2.4MPa for 0.3~1.6MPa Type, Hydraulic 3.0MPa for 2.0MPa Type				

* For fluid temperature lower than 220℃, please contact our agent in your area.

TABLE FOR CAPACITY (Max. continual discharge amount)

(L/h)

Differential pressure (MPa)		0.01	0.05	0.1	0.2	0.3	0.4	0.5	0.6
Discharge amount	0.3MPa Type	80	155	200	280	300	—	—	—
	0.7MPa Type	42	80	110	145	170	190	200	210
	1.0MPa Type	24	42	62	82	100	120	125	140
	1.6MPa Type	18	37	49	65	78	82	95	100
	2.0MPa Type	12	24	32	44	52	60	66	70
Differential pressure (MPa)		0.7	0.8	0.9	1.0	1.2	1.4	1.6	2.0
Discharge amount	0.7MPa Type	220	—	—	—	—	—	—	—
	1.0MPa Type	148	152	160	175	—	—	—	—
	1.6MPa Type	110	120	125	130	140	150	160	—
	2.0MPa Type	76	80	85	89	97	100	109	120

CONSTRUCTION

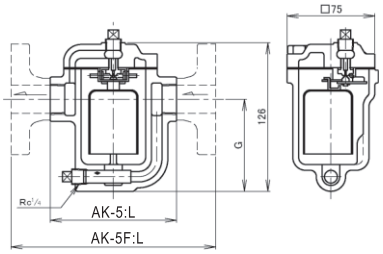

DIMENSIONS

(mm)

Model name \ Size		15(½″)	20(¾″)	25(1″)
AK-5	L	100	100	105
	G	79	79	79
	W(kg)	2	2	2
AK-5F	L	175	195	215
	G	82	82	82
	W(kg)	2.7	3	3.9

FLOW CHART (Size 15~25mm)

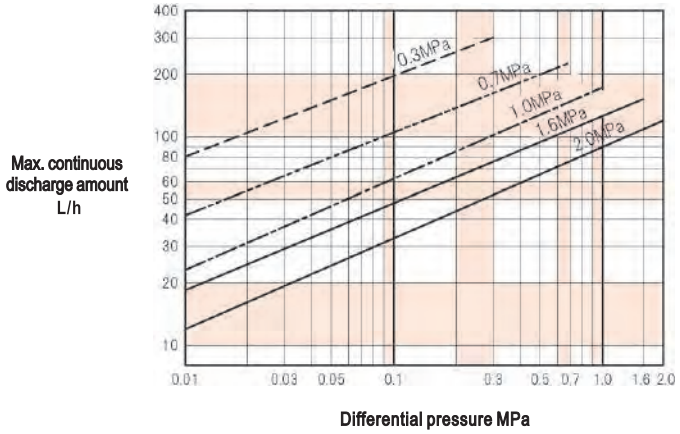

POINTS FOR SELECTION

1. Use the safety factor, which is 3 times of planned discharge amount, for selecting a proper size of steam trap.
2. The differential pressure is the difference of pressure between inlet and outlet sides.

POINTS FOR INSTALLATION/OPERATION

- The arrow mark on the main body must match with the direction of drain flow. The trap must be installed vertically to horizontal pipe.
- In the event the trap is to be left unused for a long period or there is risk of freezing in winter, remove the plug (Rc¼″) at the lower part of the main body and discharge drain.
- If the piping at the outlet side is an ascending type (which means there is back pressure), install check valve at the discharge side of steam trap.

Note: Read POINTS FOR SIZE SELECTION AND INSTALLATION carefully (see Page 165).

AK-16 Type Steam Trap

for Small Machines・Equipments, High-pressure Steam Line, etc.

Small bucket type
0.01~1.6MPa
SSR device

Steam trap that is highly corrosion resistant, durable, and elegant

Max. 1.6MPa small capacity bucket type steam trap made of stainless steel is ideal for laundry machines, heating equipments, food processing machines and medical devices.



FEATURES

- The SSR (Shockless Self Return) device eliminates impact that may occur when valve is closed. The valve disc can close by itself, but not influenced by the buoyancy of the bucket, so that it can be used for wide pressure range.
- Compact body allows installation in narrow space.
- With strainer embedded.

SPECIFICATIONS

Type	0.3MPa Type	0.7MPa Type	1.0MPa Type	1.6MPa Type
Model name	AK-16			
Code name	**AK16-DL**	**AK16-DM**	**AK16-DH**	**AK16-DS**
Size	15・20・25(½″・¾″・1″)			
Applicable pressure	**0.01~0.3MPa**	**0.01~0.7MPa**	**0.01~1.0MPa**	**0.01~1.6MPa**
Applicable fluid	Steam			
Fluid temperature	Max. 220℃			
End connection	Screwed JIS Rc			
Materials	Body(Stainless steel), Disc & seat(Stainless steel), Bucket(Stainless steel)			
Valve body pressure test	Hydraulic 1.5MPa for 0.3~1.0Pa Type, Hydraulic 2.4MPa for 1.6MPa Type			

TABLE FOR CAPACITY (Max. continual discharge amount)

(L/h)

Differential pressure (MPa)		0.01	0.05	0.1	0.2	0.3	0.4	0.5	0.6
Discharge amount	0.3MPa Type	80	155	200	280	300	—	—	—
	0.7MPa Type	42	80	110	145	170	190	200	210
	1.0MPa Type	24	42	62	82	100	120	125	140
	1.6MPa Type	18	37	49	65	78	82	95	100

Differential pressure (MPa)		0.7	0.8	0.9	1.0	1.2	1.4	1.6
Discharge amount	0.7MPa Type	220	—	—	—	—	—	—
	1.0MPa Type	148	152	160	175	—	—	—
	1.6MPa Type	110	120	125	130	140	150	160

FLOW CHART (Size 15~25mm)

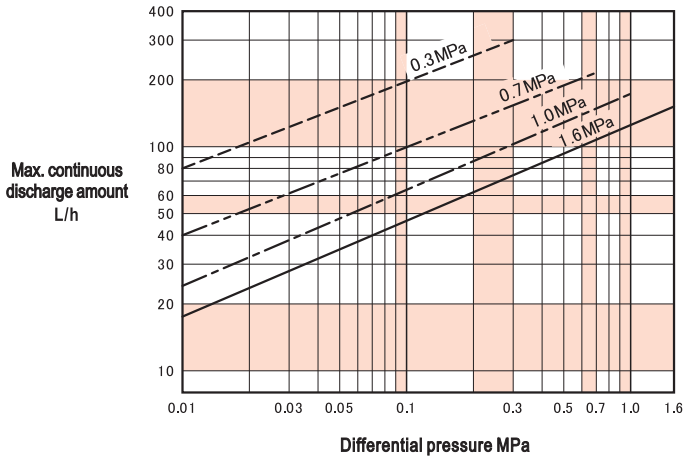

CONSTRUCTION (Unit: mm)

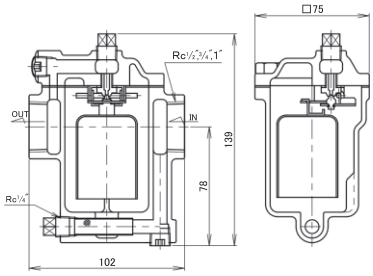

Weight:1.6kg

POINTS FOR SELECTION

1. Use the safety factor, which is 3 times of planned discharge amount, for selecting a proper size of steam trap.
2. The differential pressure is the difference of pressure between inlet and outlet sides.

POINTS FOR INSTALLATION/OPERATION

- The arrow mark on the main body must match with the direction of drain flow. The trap must be installed vertically to the horizontal pipe.
- In the event the trap is to be left unused for a long period or there is risk of freezing in winter, remove the plug (Rc¼″) at the lower part of the main body and discharge drain.
- If the piping at the outlet side is an ascending type (which means there is back pressure), install check valve at the discharge side of steam trap.

Note: Read POINTS FOR SIZE SELECTION AND INSTALLATION carefully (see Page 165).

AF-12 Type Steam Trap

Small float type
Max. 0.4MPa

Float type steam trap for pipe end, low-pressure steam header and small heat exchanger, etc.



FEATURES

- With wax type air vent valve, for shorter warm-up time and prevention of air problem.
- The direction of flow can be selected, which allows easier installation.
- Hanging hardware for piping support, allows easy installation.
- Stable performance, no matter how much drain is generated.

SPECIFICATIONS

Model name	AF-12
Code name	**AF12-G**
Applicable fluid	Steam
Fluid temperature	Max. 150℃
Applicable pressure	Max. 0.4MPa
End connection	Screwed JIS Rc
Materials	Body(Cast iron), Disc & seat(Stainless steel), Float(Stainless steel)
Valve body pressure test	Hydraulic 0.6MPa

DIMENSIONS

(mm)

Size	d	L_1	L_2	H_1	H_2	H_3	W_1	W_2	Mass(kg)
15(½″)	½″	110	144	19.5	90	129	86	167	4.5
20(¾″)	¾″	110	147	19.5	90	129	86	167	4.5
25(1″)	1″	120	161	22.5	100	145	94	184	5.5

TABLE FOR CAPACITY (Max. continual discharge amount)

(L/h)

Size \ Differential pressure MPa	0.01	0.03	0.05	0.07	0.1	0.2	0.3	0.4
15・20(½″・¾″)	88	160	200	230	265	360	420	470
25(1″)	155	280	345	385	435	590	690	750

FLOW CHART

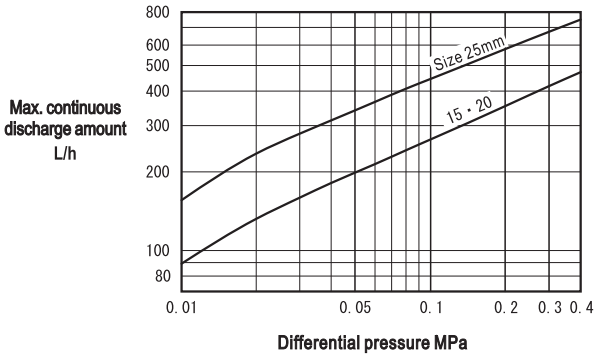

CONSTRUCTION

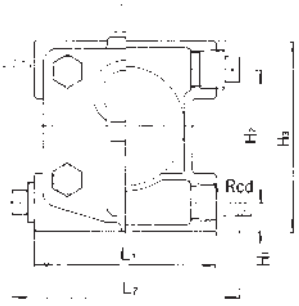

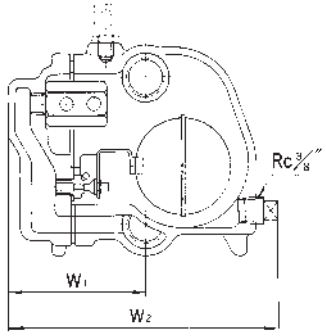

DIRECTION OF FLOW

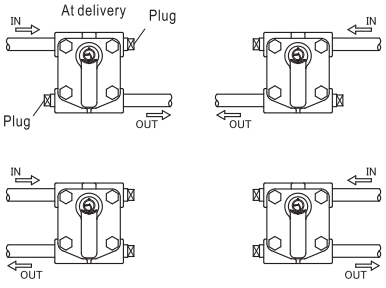

POINTS FOR SIZE SELECTION

Select a proper size that can meet the requirement on safety factor and allow at least 3 times of planned discharge volume.

In the event there is back pressure at the outlet side of steam trap, use the pressure differential between inlet and outlet sides for selecting the proper size of steam trap.

POINTS FOR INSTALLATION

- In the case the trap is to be left unused for a long period or there is risk of freezing in water, use the plug (Rc⅜″) at the lower part of the main body to discharge drain.
- Foreign matters are the cause of most claims related to steam traps in new pipelines. To reduce such claims, install KY strainer and valve that can blow off dirt.

※ It is recommended to use 80-mesh strainer.

Note: Read POINTS FOR SIZE SELECTION AND INSTALLATION carefully (see Page 165).

- If the piping at the outlet side is an ascending type (which means there is back pressure), install check valve at the discharge side of steam trap.
- Leave sufficient space for maintenance purpose.

Maintenance space

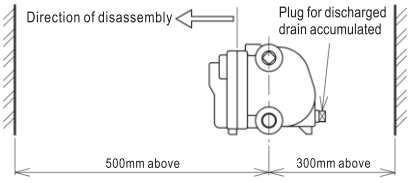

AF-15F Type Heavy Duty Trap

for Pipeline, Header, etc.

Float type
Max. 0.9MPa

Ideal for heat control equipments or equipments/machines with large amount of drain generated.



FEATURES

- Thermal air vent valve for reduced warm-up time and preventing air problem.
- Wide range of applicable pressures for a variety of applications.
- Stable performance, no matter how much drain is generated.
- By changing the position of cover, this product can also be used on vertical piping (up to bottom).

SPECIFICATIONS

Type		0.4MPa Type		0.9MPa Type	
Model name		AF-15F			
Code name		AF15FR-GL	AF15FR-ML	AF15FR-GH	AF15FR-MH
Applicable pressure		Max. 0.4MPa		Max. 0.9MPa	
Applicable fluid		Steam			
Fluid temperature		Max. 180℃			
End connection		Flanged JIS 10KFF			
Materials	Body	Cast iron	Ductile cast iron	Cast iron	Ductile cast iron
	Disc & seat, Float	Stainless steel			
Allowed back pressure		Within 90% of pressure on inlet side			
Valve body pressure test		Hydraulic 1.5MPa			
Installation		Vertical line (flowing from top to down) and horizontal line by changing cover position*			

* It is possible by changing the cover position. Refer to "Installation example at vertical line and horizontal line" below.

CONSTRUCTION

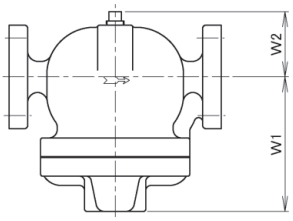

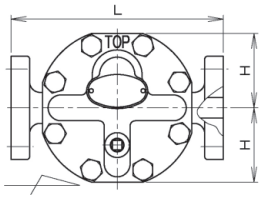

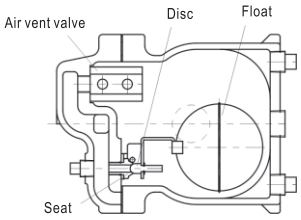

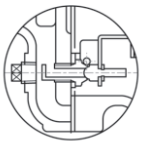

In the case of size 20~32mm(Max.0.9MPa)

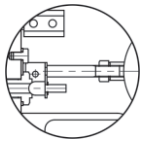

In the case of size 40・50mm

DIMENSIONS

(mm)

Size	20(¾″)	25(1″)	32(1¼″)	40(1½″)	50(2″)
L	205	215	245	280	290
H	72	72	72	102	102
W_1	135	135	135	170	170
W_2	65	65	65	160	160
Mass(kg)	8.3	10	11	21	23

TABLE FOR CAPACITY (Max. continual discharge amount)

(m^3/h)

Type	Size \ Differential pressure MPa	0.05	0.1	0.2	0.4	0.5	0.6	0.7	0.8	0.9
0.4MPa	20・25・32(¾″・1″・1¼″)	0.57	0.8	1.15	1.55	—	—	—	—	—
	40・50(1½″・2″)	1.97	2.86	3.91	5.0	—	—	—	—	—
0.9MPa	20・25・32(¾″・1″・1¼″)	—	0.43	0.52	0.68	0.75	0.8	0.86	0.92	0.97
	40・50(1½″・2″)	—	1.97	2.34	3.0	3.26	3.57	3.82	4.1	4.31

FLOW CHART

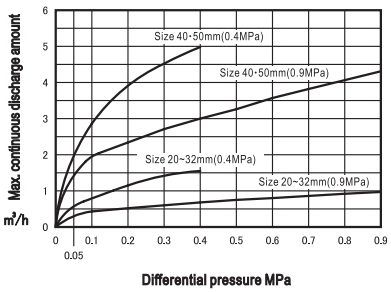

POINTS FOR SIZE SELECTION

The size should be selected with considerations paid on safety factor and a capacity that is 3 times of planned discharge amount (which is the amount of drain generated in the case of supply pipe, or steam consumption of machine in the case of process).

Note: Read POINTS FOR SIZE SELECTION AND INSTALLATION carefully (see Page 165).

PIPING EXAMPLE

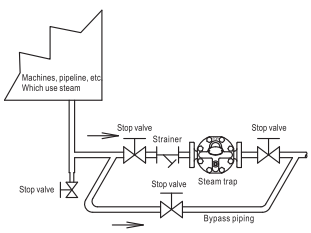

Installation on vertical・horizontal piping

The name plate and the TOP mark should face upwardly

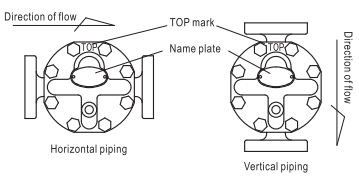

AF-16F Type Heavy Duty Trap

for Pipeline, Header, etc.

Float type
Max. 0.9MPa

Ideal for heat control equipments or equipments/machines with large amount of drain generated.



FEATURES

- Thermal air vent valve for reduced warm-up time and preventing air problem.
- Wide range of applicable pressures for a variety of applications.
- Stable performance, no matter how much drain is generated.

SPECIFICATIONS

Model name	AF-16F
Code name	**AF16F-G**
Size	50(2″)
Applicable fluid	Steam
Fluid temperature	Max. 180℃
Applicable pressure	Max. 0.9MPa
End connection	Flanged JIS 10KFF
Materials	Body(Cast iron), Disc & seat(Stainless steel), Float(Stainless steel)
Allowed back pressure	Within 90% of pressure on inlet side
Valve body pressure test	Hydraulic 1.5MPa

CONSTRUCTION (Unit:mm)

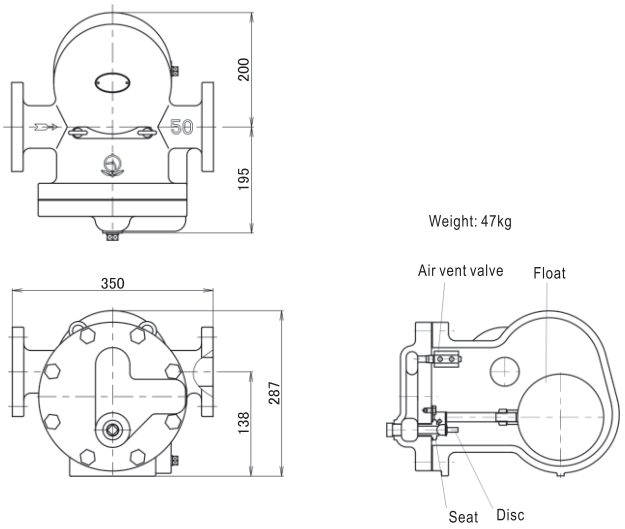

TABLE FOR CAPACITY (Max. continual discharge amount)

(m^3/h)

Differential pressure(MPa)	0.05	0.1	0.2	0.4	0.5	0.6	0.7	0.8	0.9
Discharge amount	1.87	2.65	3.75	5.3	5.92	6.49	7.0	7.5	7.95

POINTS FOR SIZE SELECTION

The size should be selected with considerations paid on safety factor and a capacity that is 3 times of planned discharge amount (which is the amount of drain generated in the case of supply pipe, or steam consumption of machine in the case of process).

Note: Read POINTS FOR SIZE SELECTION AND INSTALLATION carefully (see Page 165).

FLOW CHART

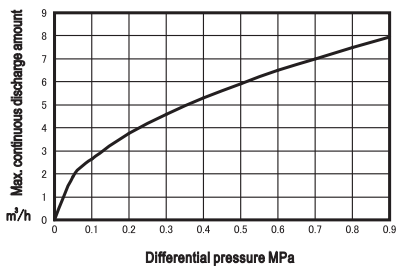

PIPING EXAMPLE

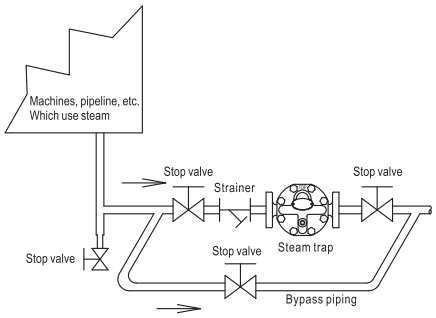

INSTALLATION STATE

The name plate and the TOP mark should face upwardly

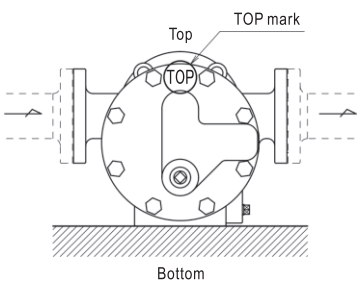

AF-11H Type Heavy Duty Trap

Float type
Max. 0.5MPa

Ideal for heat exchanger, drying machine, header etc. with large amount of drain generated.

Simple structured, lever float type heavy duty trap with balancing structure of valve disc. Small in size but large in discharge capacity.

FEATURES

- Simple, durable structure.
- Balancing structure allows large discharge capacity.
- Easy disassembly and maintenance.
- Wax type air vent valve prevents air problem.
- Continuous discharge of drain.

SPECIFICATIONS

Model name	AF-11H
Code name	**AF11H-B**
Applicable fluid	Steam
Fluid temperature	Max. 160℃
Applicable pressure	Max. 0.5MPa
End connection	Screwed JIS Rc
Materials	Body(Cast iron), Disc & seat(Stainless steel), Float(Stainless steel)
Valve body pressure test	Hydraulic 0.75MPa

DIMENSIONS

(mm)

Size	d	L	H_1	H_2	H_3	D	W	Mass(kg)
15(½″)	½″	285	62	137	252	115	216	14
20(¾″)	¾″	285	62	137	252	115	216	14
25(1″)	1″	290	63	133	261	115	216	15
32(1¼″)	1¼″	290	63	133	261	115	216	15
40(1½″)	1½″	370	69	189	336	125	248	29
50(2″)	2″	370	69	189	336	125	248	29

TABLE FOR CAPACITY (Max. continual discharge amount)

(m^3/h)

Size \ Differential pressure MPa	0.03	0.05	0.1	0.2	0.3	0.35	0.4	0.5
15・20(½″・¾″)	0.95	1.41	2.00	2.82	3.46	3.74	4.00	4.47
25・32(1″・1¼″)	1.20	1.90	3.17	4.65	5.75	6.20	6.65	7.45
40・50(1½″・2″)	2.32	3.45	5.20	6.95	8.00	8.55	9.00	9.80

FLOW CHART

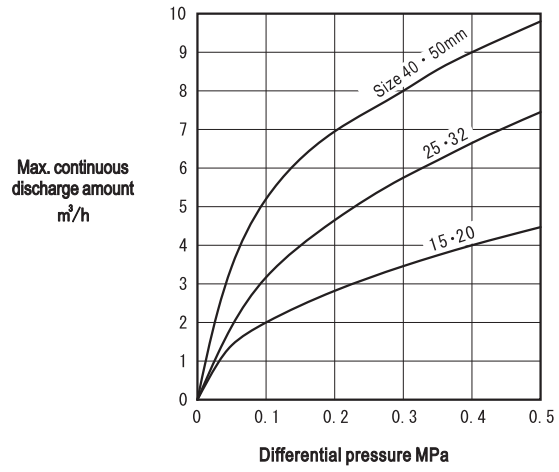



CONSTRUCTION

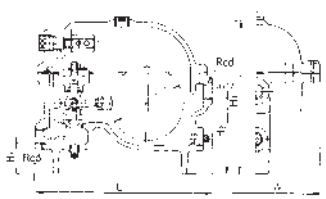

POINTS FOR SIZE SELECTION

Select a proper size that can meet the requirement on safety factor and allow at least 3 times of planned discharge volume.

In the case there is back pressure at the outlet side of trap, use the differential pressure between inlet and outlet sides to select the size of valve.

Note: Read POINTS FOR SIZE SELECTION AND INSTALLATION carefully (see Page 165).

AF-11HF Type Heavy Duty Trap

Float type
Max. 0.35MPa

Ideal for heat exchanger, drying machine, header, etc. with large amount of drain generated.
A heavy duty, lever float type trap developed with simple structure.

FEATURES

- Simple, durable structure.
- Easy disassembly and maintenance.
- Wax type air vent valve prevents air problem.
- Continuous discharge of drain.

SPECIFICATIONS

Model name	AF-11HF
Code name	**AF11HF-B**
Size	65・80(2½″・3″)
Applicable fluid	Steam
Fluid temperature	Max. 150℃
Applicable pressure	Max. 0.35MPa
End connection	Flanged JIS 5KFF*
Materials	Body(Cast iron), Disc & seat(Stainless steel), Float (Stainless steel)
Valve body pressure test	Hydraulic 0.53MPa

*Including companion flanges, bolts, nuts and gaskets.

CONSTRUCTION (Unit:mm)

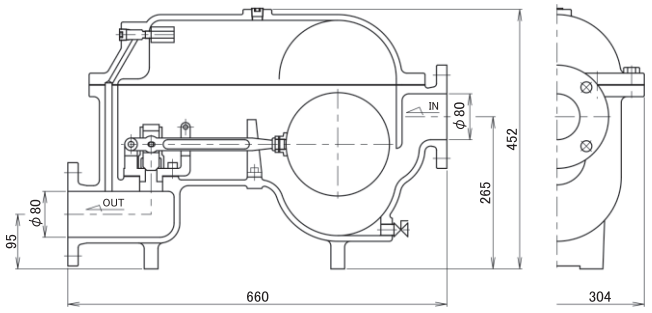

Weight:90kg

TABLE FOR CAPACITY (Max. continual discharge amount)

(m³/h)

Differential pressure(MPa)	0.03	0.05	0.1	0.2	0.3	0.35
Discharge amount	4.45	6.03	8.32	10.90	12.70	13.50

FLOW CHART

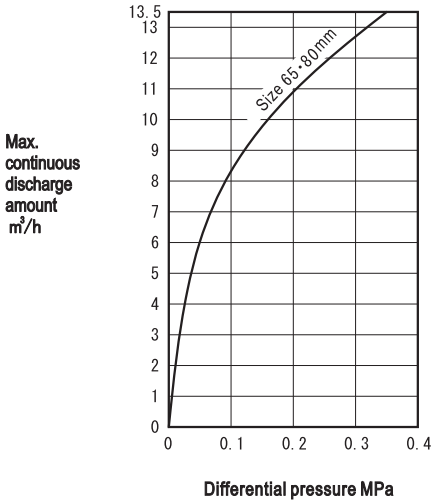



POINTS FOR SIZE SELECTION

Select a proper size that can meet the requirement on safety factor and allow at least 3 times of planned discharge volume.

In the case there is back pressure at the outlet side of trap, use the differential pressure between inlet and outlet sides to select the size of valve.

Note: Read POINTS FOR SIZE SELECTION AND INSTALLATION carefully (see Page 165).

AF-20F Type Heavy Duty Trap

Float type
Max. 1.0MPa

This trap can be used with heat exchanger, drying machine, header, and other devices at where relatively large amount of drain is produced.

With independent pilot component, this float-type heavy-duty trap is compact and light, nevertheless has a high discharge capacity.

FEATURES

- Applicable to a variety of applications with pressure range less than 1.0 MPa.
- Prevent air failure using membrane-type air vent valve.
- Allow continuous discharge of drain.

SPECIFICATIONS

Model name	AF-20F
Code name	**AF20F-M**
Applicable fluid	Steam
Fluid temperature	Max. 184℃
Applicable pressure	Max. 1.0MPa
End connection	Flanged JIS 10KFF
Materials	Body(Ductile cast iron), Disc & seat(Stainless steel), Float(Stainless steel)
Valve body pressure test	Hydraulic 1.5MPa

CONSTRUCTION (Unit:mm)

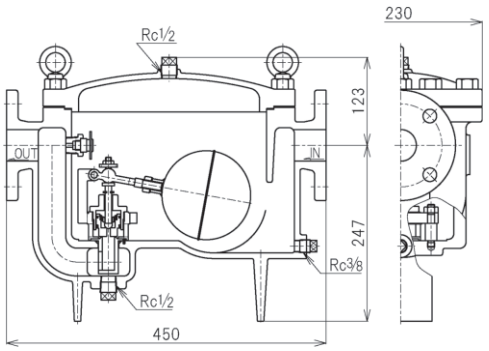

TABLE FOR CAPACITY (Max. continual discharge amount)

(m^3/h)

Size \ Pressure differential (MPa)	0.03	0.05	0.1	0.2	0.3	0.4	0.5	0.6	0.7	0.8	0.9	1.0
25·32(1″·1¼″)	2.80	3.78	5.40	7.00	8.11	8.98	9.87	9.76	11.65	12.55	13.44	14.32
40·50(1½″·2″)	2.80	3.78	5.40	7.34	8.90	10.11	11.07	12.03	12.97	13.94	14.89	15.84

FLOW CHART

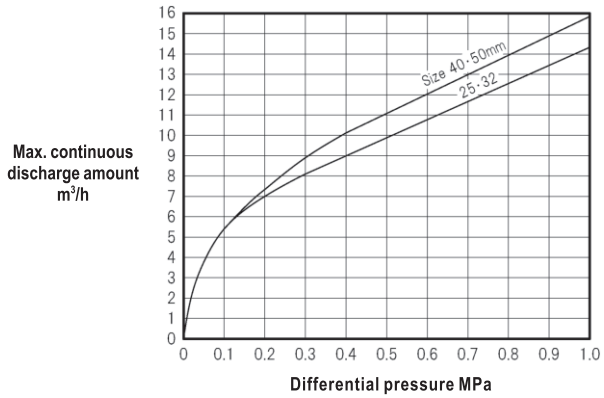



MASS

Size	Mass(kg)
25·32(1″·1¼″)	33
40·50(1½″·2″)	35

POINTS FOR SIZE SELECTION

Select a proper size that can meet the requirement on safety factor and allow at least 3 times of planned discharge amount.
Do not apply any thermal insulation on steam trap.
The differential pressure is the difference of pressure between inlet and outlet sides.

Note: Read POINTS FOR SIZE SELECTION AND INSTALLATION carefully (see Page 165).

BA-5 Type Drain Separator

for Main Pipe/Branch, Inlet of Equipment, etc.

Baffle type

Drain separators are used to separate water drops or drain occurred in steam or air pipe.
They can improve the dryness of steam pipeline and contribute to stable supply of heat and improvement of heating efficiency.



FEATURES

- Reduce steam hammer due to residual drain during initial operation of steam.
- Stabilize movement of regulating valve, also reduce corrosion and wearing.
- Remove water drops and reduce rust in pipeline.

SPECIFICATIONS

Model name	BA-5	
Code name	BA5-M	
Applicable fluid	Steam	Air
Applicable pressure	Max. 2.0 MPa	Max. 0.98 MPa
Fluid temperature	Max. 220℃	
End connection	Inlet: Screwd JIS Rc. Drain outlet: Screwd JIS Rc.	
Materials	Body, cover, baffle (Ductile cast iron)	
Valve body pressure test	Hydraulic 3.0 MPa	

DIMENSIONS

(mm)

Size	d1	d2	L	H	G	A	B	Mass(kg)
15(½″)	½″	¾″	130	91	105	128	145	7.6
20(¾″)	¾″	¾″	130	91	105	128	145	7.6
25(1″)	1″	¾″	155	109	147	150	170	11.2
32(1¼″)	1¼″	1″	186	163	197	186	212	25
40(1½″)	1½″	1″	186	163	197	186	212	25
50(2″)	2″	1¼″	218	196	268	224	224	41.5

CONSTRUCTION (Unit: mm)

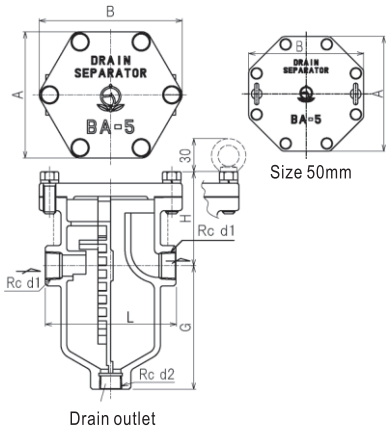

SELECTION METHOD

It is recommended you to select drain separator with diameter that is the same as (or larger than) that of the pipe. For selection of drain separator with specified flow rate and pressure loss of drain separator, please refer to the flow characteristics drawing in the next page.
※ In the event of selecting drain separator according to flow rate of pipeline, it is recommended that the flow velocity of pipeline is less than 30 m/s for steam pipeline or 16 m/s for air pipeline.

● Selection of trap

Applicable fluid	Steam		Air
Applicable pressure	Max. 1.0 MPa	Max. 1.6 MPa (2.0 MPa)	Max. 0.98 MPa
Recommended trap	AD-17, AK-1H	AD-17 (AD-18)	AK-21

● Recommended diameter of dirt pocket and trap

Nominal diameter of drain separator	15・20・25(½″・¾″・1″)	32・40(1¼″・1½″)	50(2″)
Drain outlet diameter	JIS Rc¾″	JIS Rc1″	JIS Rc1¼″
Nominal diameter of dirt pocket	20(¾″)	25(1″)	32(1¼″)
Nominal diameter of trap	20(¾″)	25(1″)	32(1¼″)

※It is recommended that stop valve installed below dirt pocket has nominal diameter larger than 20mm.
※ See Piping Example drawing for reference.

Tips for installation and handling

Piping Example

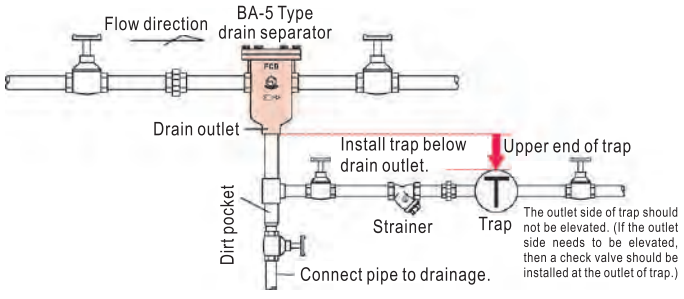

1. Wash the pipeline thoroughly before installing the product.
※ Insufficient washing may result in accumulation of dirt at drain outlet, blockage, or failure of trap.
2. To allow easy installation and dismounting, please install union joint at the inlet and outlet of the product.
3. When mounting the product on pipe, make sure the direction indicated by the arrow mark on the product matches with flow direction of fluid.
4. A trap must be installed at drain outlet. Also, drain outlet must be connected to pipeline that can lead drain to a safe place.
5. The piping diameter at drain outlet should be the same as that of connection pipe. Dirt pocket and trap should be installed. A strainer must be installed at the inlet of trap.
6. Trap should be installed below drain outlet.
7. The outlet piping of stop valve below dirt pocket should be connected to drainage ditch.
8. Use spanner or wrench to tighten hex screws for fixing the main body of the product.
9. Apply thermal insulation on drain separator if risk of freezing or condensation is anticipated.

DATA/BA-5 Type Drain Separator

■ FLOW CHARACTERISTICS

(for Steam)

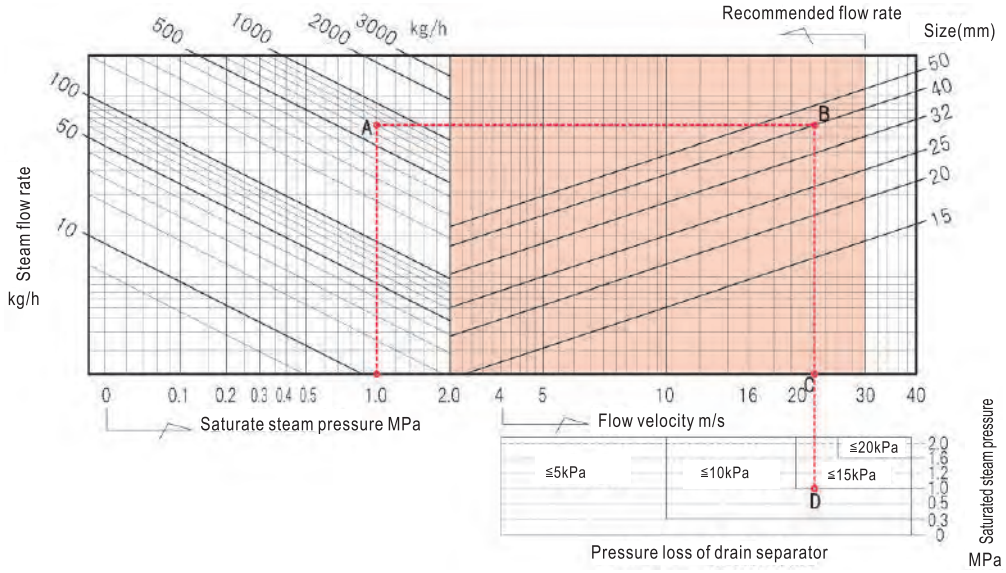

(for Air)

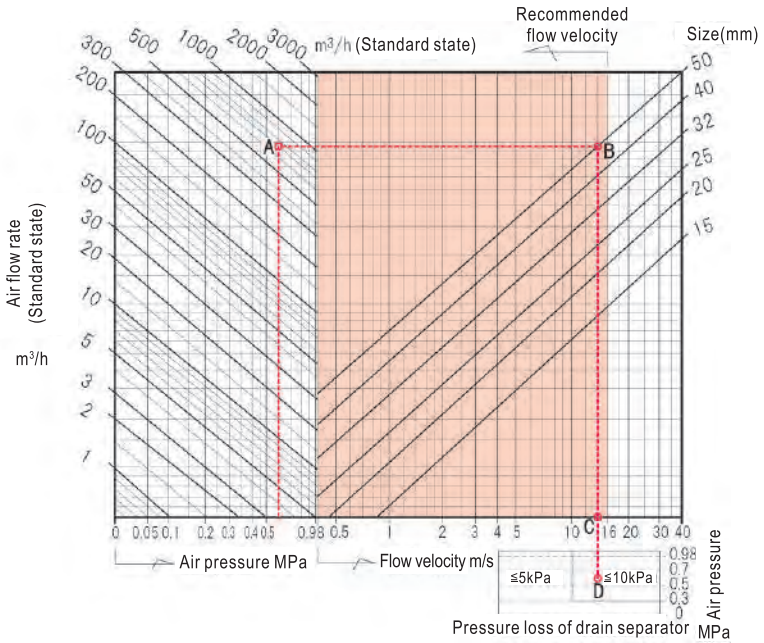

● HOW TO USE THE CHART

(For steam)

Assume saturated steam pressure is 1.0 MPa and flow rate is 700 kg/h. Let us use the diagram and find out the nominal diameter of the right drain separator, piping flow rate, and pressure loss. The recommended flow velocity of drain separator is below 30 m/s.

On the horizontal axis of saturated steam pressure, find out the 1.0 MPa point. Draw a vertical line passing through this point. On the vertical axis of flow rate, find out the 700 kg/h point. Draw a horizontal line passing through this point. The two lines crosses at point A. Now draw a horizontal line from point A until it crosses with the line representing the nominal diameter of drain separator within the range of recommended flow velocity. The crossing point is B. From point B, it is able to read the nominal diameter that we are looking for, which is “40mm” in this case.

Now draw a vertical line from point B. The line crosses with the axis representing piping flow velocity at point C and the line representing 1.0 MPa saturated steam pressure at point D in the table of pressure loss. From point C, it is able to read that piping flow velocity is 22.5 m/s. Since point D is at the boundary of the lines representing 10 kPa and 15 kPa, the larger one, which is 15 kPa is selected as pressure loss.

If the piping diameter is 50mm, then the nominal diameter of drain separator should also be 50mm, and the piping flow velocity and pressure loss can be read in the same way as described above (points B, C, and D).

(For air)

Assume air pressure is 0.6 MPa and flow rate is 700 m³/h. Let’s use the diagram and find out the nominal diameter of the right drain separator, piping flow rate, and pressure loss. The recommended flow velocity of drain separator is below 16 m/s.

On the horizontal axis of air pressure, find out the 0.6 MPa point. Draw a vertical line passing through this point. On the vertical axis of flow rate, find out the 700 m3/h point. Draw a horizontal line passing through this point. The two lines crosses at point A. Now draw a horizontal line from point A until it crosses with the line representing the nominal diameter of drain separator within the range of recommended flow velocity. The crossing point is B. From point B, it is able to read the nominal diameter that we are looking for, which is “50mm” in this case.

Now draw a vertical line from point B. The line crosses with the axis representing piping flow velocity at point C and the line representing 0.6 MPa air pressure at point D in the table of pressure loss. From pint C, it is able to read that piping flow velocity is 14 m/s. Since point D is within the range of the line representing 10 kPa, the pressure loss is 10 kPa.

AK-21 Type Air Trap

for Pipe End, Receiver Tank, Drain Separator, etc.

Bucket type
0.01~0.98MPa

Discharge drain from air pipeline automatically.
Mechanical structure ensures reliable operation.



FEATURES

- Simple structure allows easy maintenance and difficulty to catch contamination or rust.
- Since drain can easily get into air trap, it is not necessary to install an equalizer.

SPECIFICATIONS

Model name	AK-21
Code name	AK21-G
Size	15·20·25(½″·¾″·1″)
Applicable fluid	Air
Fluid temperature	5~100℃
Applicable pressure	0.01~0.98 MPa
End connection	Screwd JIS Rc
Materials	Body(Cast iron), Disc&seat(Stainless steel), Bucket(Stainless steel)
Valve body pressure test	Hydraulic 1.5 MPa

CONSTRUCTION

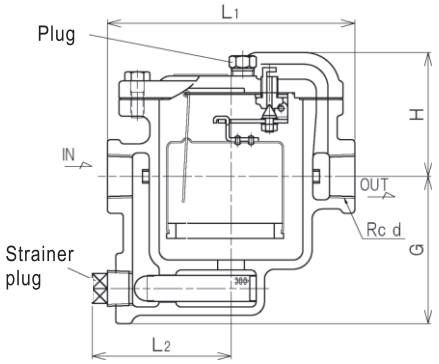

Note: Please note that this product discharges some air due to the upward and downward movement of the bucket to facilitate flowing of drain into the product.

FLOW CHART

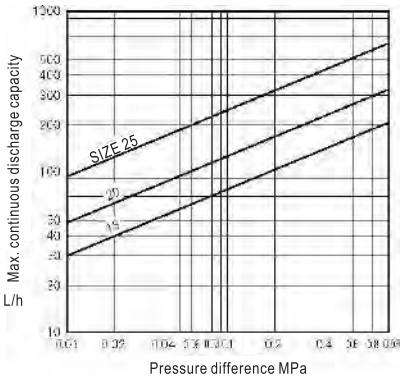

1. To select an appropriate nominal diameter, please consider safety rate and select one with discharge capacity that is twice larger than the planned discharge capacity.
2. If there is back pressure at the outlet of air trap, then the right nominal diameter should be selected according to the pressure difference between the inlet and the outlet.

DIMENSIONS

(mm)

Size	d	L1	L2	G	H	Mass(kg)
15(½″)	½″	130	76	72.5	68.5	2.7
20(¾″)	¾″	148	87	88	74	4.4
25(1″)	1″	184	94	98	81	5.8

TABLE FOR CAPACITY (Max. continual discharge amount)

(L/h)

Size \ Differential pressure (MPa)	0.01	0.1	0.2	0.3	0.4	0.5	0.6	0.7	0.8	0.9	0.98
15(½″)	30	84	110	130	146	160	173	180	195	205	210
20(¾″)	48	130	175	205	230	252	270	287	305	320	330
25(1″)	94	260	340	398	444	485	522	555	582	608	625

Tips for installation and handling

Piping Example (mounting on drain separator)

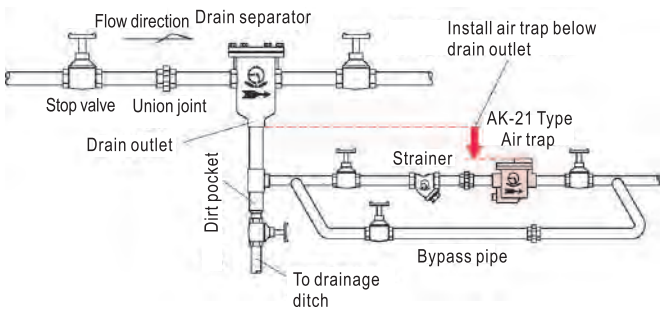

Note: This product discharges air drain and some air.

※ For details of drain separator, please see Page 160 and 161.

Preparation before operation

Before operation, please remove the plug and fill water.
After filling water, screw the plug and make sure there is no leakage of water.

Reference of filling water

Size	Amount of water
15(½″)	about 300cc
20(¾″)	about 400cc
25(1″)	about 500cc

1. Before mounting the product, please wash the pipeline thoroughly.
   ※ Insufficient washing of the pipeline may result in leakage at valve seat due to contamination.
2. The product has an embedded strainer (punch hole). You may need to install an independent strainer if the mesh of the embedded strainer does not satisfy your need.
3. When mounting the product, make sure the product is vertically horizontal pipe and the direction indicated by the arrow mark on the product matches with flow direction of fluid.
4. If there is risk of freezing, remove strainer plug or take other measures (such as installation of anti-freezing valve) to prevent freezing.
5. If the outlet pipe is elevated, then a check valve is needed at the outlet side of air trap.

BS-1,1A,2,2A Type Sight Glass

Using a sight glass, the operator can check fluid inside the pipeline and the state of machine operation.

We have a lineup of sight glass products for water・liquid and steam・drain applications.

SPECIFICATIONS

Type		For water・liquid		For steam・drain	
Model name		BS-1	BS-1A	BS-2	BS-2A
Code name		**BS1-M**	**BS1A-M**	**BS2-M**	**BS2A-M**
Applicable fluid		**Water, hot water, oil *2&non-corrosive fluid**		**Steam&drain**	
Construction		See-through type	Flapper type	See-through type	Flapper type
Fluid temperature		Max. 150°C		Max. 150°C*3.	
Applicable pressure		Max. 1.0MPa		Max. 0.4 MPa*3.	
End connection		Screwd JIS Rc			
Material	Body&cap	Ductile cast iron	Ductile cast iron (flapper: Stainless steel)	Ductile cast iron	Ductile cast iron (flapper: Stainless steel)
	Glass	Reinforced glass		Reinforced glass (with mica plate at surfaces contacting with liquid)*3.	
Pressure test		Hydraulic 1.5 MPa			

＊1. Sight glass with ball (see-through type) is also available. (BS-1B Type for water and liquid and BS-2B Type for steam and drain)
＊2. If there is any local regulation for fuel oil or diesel oil, confirm the body materials according to the regulation.
＊3. Sight glass products made of heat-resistant glass and with mica plate at surfaces contacting with liquid (BS-3 Type (see-through type) and BS-3A Type (flapper type)) are also available. (Fluid temperature: Max.220°C. Applicable pressure: Max.1.0 MPa.)

DIMENSIONS

(mm)

Size	d	L	H	A	D	Mass(kg)
15(½″)	½″	95	63	71	40	0.85
20(¾″)	¾″	100	63	71	40	0.95
25(1″)	1″	120	73	83	45	1.4

CONSTRUCTION

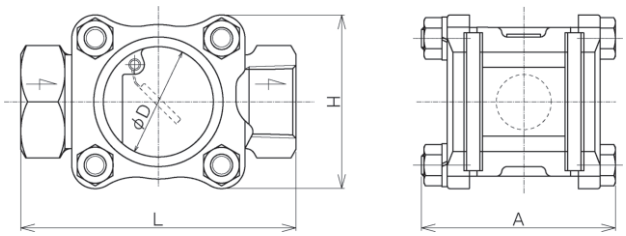

Tips for installation and handling

1. When installing sight glass on pipe, make sure the direction indicated by the arrow mark on the product matches with the flow direction of fluid.
2. Please install stop valve and bypass pipe before and after sight glass (see Piping Example).
3. Fix and support sight glass securely to avoid excessive load, bending, or vibration of sight glass.
4. Use sight glass with mica plate (BS-2, 2A Type) if the fluid is steam or drain.
5. When installing BS-2, 2A Type sight glass on steam trap line, make sure it is installed at the secondary side of steam trap. The glass may break due to excessive pressure if it is installed at the primary side.
6. If there is risk of freezing, please make a drain hole.

PIPING EXAMPLE

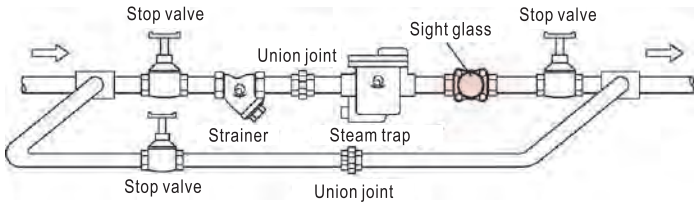

FLOW DIRECTION

See-through type		Flapper type	
Horizontal pipe	Vertical pipe	Horizontal pipe	Vertical pipe

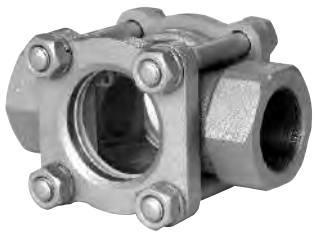

BS-1, 2 Type
(See-through type)

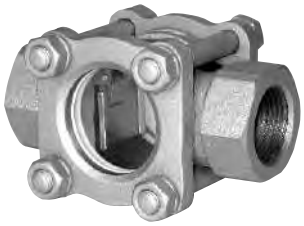

BS-1A, 2A Type
(Flapper type)

EXAMPLE: APPLICATION OF STEAM TRAP

STEAM SUPPLY PIPELINE (main pipe·branch pipe·header, etc.)

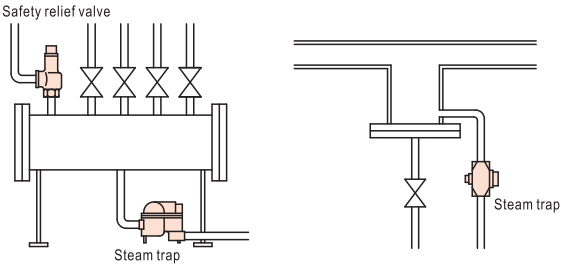

- Points for selection:
  There is a large difference between the amount of drain generated at normal operation state and that generated at start up. Large amount of air and drain generated at start up may obstruct the supply of steam.
- Applicable model:
  ATB-5, 5F/AT-6, 6F Type (thermo element type)
  AD Type series (disc type)
  AK Type series (bucket type), AF Type series (float type)

CLEANING EQUIPMENTS (press machine·drying machine, etc.)

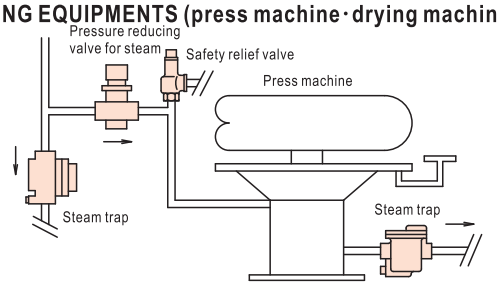

- Points for selection:
  Pay attention to selection of the size of steam trap, because the load changes drastically.
- Applicable model:
  AD Type series (disc type)
  AK Type series (bucket type)
  AF Type series (float type)

AIR CONDITIONING·MANUFACTURING EQUIPMENTS (heat exchanger, etc.)

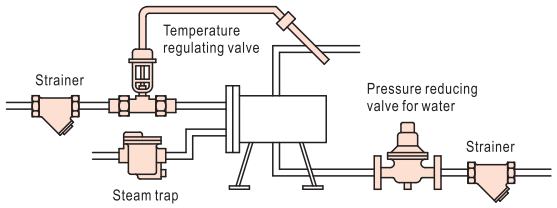

- Points for selection:
  Large amount of drain is generated for maximal utilization of the heat of steam. There is a large difference between the amount of drain generated at normal operation state and that generated at start up.
- Applicable model:
  AF Type series (float type)
  AK Type series (bucket type)

(Air handling unit)

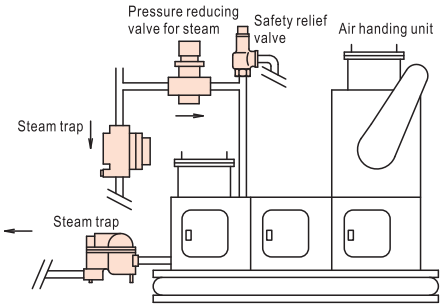

- Points for selection:
  Large amount of drain is generated for maximal utilization of the heat of steam. In addition, the amount and temperature of air feed also affect the amount of drain generated.
- Applicable model:
  AF Type series (float type)
  AK Type series (bucket type)

FOOD PROCESSING EQUIPMENTS·KITCHEN UTENSILS (stew pot·heating pot, etc.)

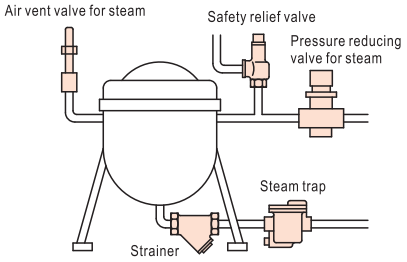

- Points for selection:
  Large amount of drain is generated for maximal utilization of the heat of steam. With the passing by of heating time, the amount of drain reduces.
- Applicable model:
  AF Type series (float type)
  AK Type series (bucket type)

MEDICAL·PHARMACEUTICAL·FOOD PROCESSING EQUIPMENTS (autoclave·sterilizer, etc.)

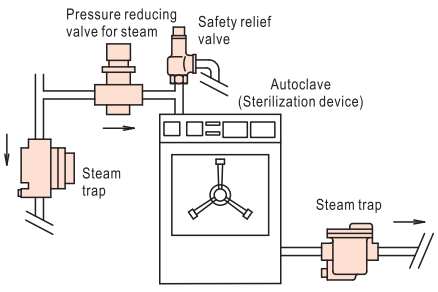

- Points for selection:
  To rapidly increase the internal temperature, large amount of drain is generated during initial operation period. The amount of drain decreases after temperature becomes stable.
- Applicable model:
  ATB-5, 5F/AT-6, 6F Type (thermo element type)
  AD Type series (disc type)
  AK Type series (bucket type)

PIPING EXAMPLE

Fig. 1 Piping example

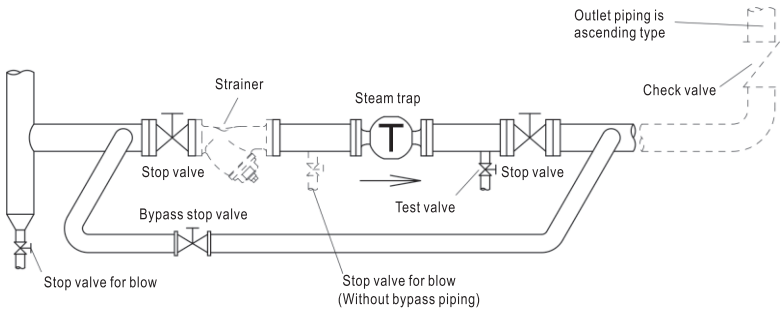

POINTS FOR SIZE SELECTION AND INSTALLATION

(Steam trap is hereinafter referred to as "trap".)

1. Select a proper size that can meet the requirement on safety factor and allow at least 3 times of planned discharge volume.
2. AT and ATB Type can detect drain temperature and open/close valve based on the temperature detected. When selecting size, pay attention to following issues:
   ※1.Before the temperature of saturated steam drops to the temperature for valve opening, drain accumulates at the primary side of trap. Do not install trap on machines or equipments whose functions may be affected by accumulation of drain.
   ※2.Avoid installing trap on machines or equipments using solenoid valve control for frequent feeding or stop feeding of steam. Such action may cause pressure changes drastically and reduce the durability of bellows and thermo element. (Applicable models: AT-1A, 1S, AT-6, 6F, 6FB, ATB-5, 5F Type)
   ※3.The pipe at the inlet side of trap should be naked pipe that is more than 1m in length. Do not apply thermal insulation on trap. (Applicable models: AT-6, 6F, 6FB, ATB-5, 5F Type) (see Fig.2)
3. Install strainer at the primary side of trap.
   ※ It may not be necessary to install strainer in the case of steam trap with strainer embedded. However, for ensuring stable operation, it is recommended installing strainer.
4. For devices whose operation cannot be stopped, install a bypass pipe (with stop valve) between the primary and secondary sides of steam trap (see Fig.1). If you choose not to install bypass pipe, install stop valve for blowing, which is branched from the main pipe, right before the stop valve at the primary side of steam trap, to make flushing possible.
5. The position of steam trap should be as low as possible to allow drain flow by its weight.
6. In the event trap is installed at the midway of main pipe, install a separator with the same diameter as of the main pipe (see Fig.3).
7. To install trap at pipe end, install a dirt pocket (which diameter is the same as that of main pipe) at pipe end, and install trap at the pipe which is branched from dirt pocket(see Fig.4).
8. When the discharge side of trap is piped to drain tank or waterspout, make sure such pipe does not submerge into water. In addition, install check valve to prevent back flow (see Fig. 5, 6).
9. When the discharge side of trap is piped to drain collecting pipe or other system, make sure the discharge pipe enters into such drain collecting pipe or system from the upper side, and install check valve if there is back pressure (see Fig.5).
10. In the event the discharge side of trap opens to atmosphere, make sure such outlet piping does not cause any danger. In addition, install BH-1 Type silencer to reduce noise that occurs when drain is discharged (see Fig.7).
11. In general, one trap is necessary for one unit of machine (see Fig.8).
12. The arrow mark on steam trap should match with the direction of the flow of fluid. Except for some models, steam trap should be installed vertically to horizontal pipe.
13. Leave some space for diassembling and maintenance.
14. Fix or support steam trap properly to avoid damage of steam trap due to the weight of pipe, stress, bending force or vibration.
15. Discharge drain if there is risk of freezing.
16. The secondary piping of AD-17B, 17FB Type (for cold area) should not be ascending type.

Fig.2 AT、ATB Type piping Example

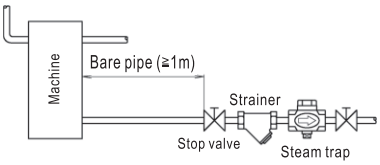

Fig.3 Installation at midway of pipe

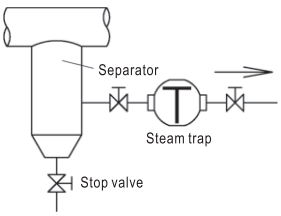

Fig.4 Pipe end installation

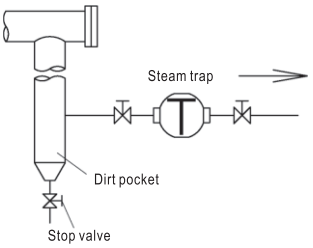

Fig.5 Drain tank piping

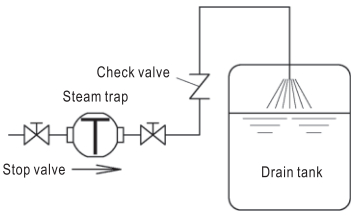

Fig.6 Waterspout Piping Example

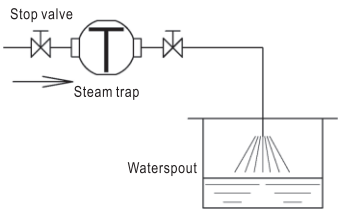

Fig.7 Discharge to atmosphere

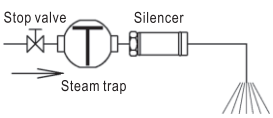

Fig. 8 Installation on machine

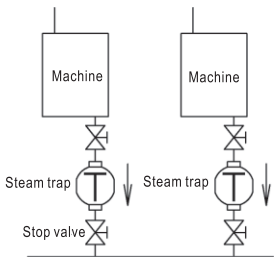

MEMO

AIR VENT VALVES

9

The most popular use of an air vent valve is to eliminate air troubles and prevent corrosion in pipe line by automatically discharging air accumulated in the piping for airconditioning, water supply or hot water supply of buildings or cold/hot water supply piping or tanks in factories.

Model name	End connection	Size	Applicable fluid	Applicable pressure(MPa)	Materials		Page
					Body	Trim	
AF-4S	Screwed	15~32(½″~1¼″)	Water, hot water or oil	Max. 1.0	Cast iron	Brass & Stainless steel & synthetic rubberl	168
AF-4CN			Water or hot water				
AF-4M			Water, hot water or oil			Stainless steel	
AF-5N	Screwed	15~25(½″~1″)	Water, hot water or oil	Max. 1.6	Cast bronze	Stainless steel	169
AF-6N	Screwed	15~25(½″~1″)	Water or hot water	Max. 1.0	Brass	Cast bronze & synthetic rubber	170
AF-17N	Screwed	15~25(½″~1″)	Water or hot water	Max. 1.0	Cast bronze	Cast bronze & synthetic rubber	171
AF-9, 9H	Screwed	15~25(½″~1″)	Water or hot water	Max. 1.0	Stainless steel	Stainless steel & synthetic rubber	172
AF-9L, 9HL				Max. 0.3			
AF-10, 10H	Screwed	15~25(½″~1″)	Water, hot water or oil	Max. 1.0	Stainless steel	Stainless steel & synthetic rubber	

AF-4 Type Series Air Vent Valve

for Building Equipments, Factory Equipments, etc.

Made of cast iron, 1.0MPa

Air vent valve for liquids. Automatically discharge air accumulated in piping and sealed tank, and smoothen the flow of fluid.



AF-4S Type



AF-4CN Type

FEATURES

- Head swinging valve disc for better air tightness.
- Comparatively larger discharge amount.
- Simple structure allowing easy maintenance.
- Nylon coating of AF-4CN Type, highly rust resistant.

SPECIFICATIONS

Type	Standard item	Nylon coating	Hot water
Model name	AF-4S	AF-4CN	AF-4M
Code name	**AF4S-G**	**AF4CN-G**	**AF4M-G**
Applicable fluid	Water, hot water & oil (S.G.:0.9 or over)	Water & hot water	Water, hot water & oil (S.G.:0.9 or over)
Fluid temperature	5~90℃	5~60℃	5~150℃
Applicable pressure	Max. 1.0MPa		
End connection	Screwed JIS Rc		
Materials	Body(Cast iron), Disc & Float(Stainless steel), Seat ring(Brass), Disc tip(Synthetic rubber)		Body(Cast iron) Disc, Float & Seat (Stainless steel)
Painting or coating for Body	Inside:Rust proof oil Outside:Metallic blue	Body & Cover:Nylon 11 coating	Inside:Rust proof oil Outside:Heat-resistant silver paint
Valve body pressure test	Hydraulic 1.75MPa		

* In case of avoiding the rust, select AF-4CN, AF-5N, AF-10 and AF-17N Type Air vent valves.

DIMENSIONS

(mm)

Size	A	H	C	d	Mass(kg)
15(½″)	114	154(150)	60	½″	3(2.8)
20(¾″)	114	154(150)	60	¾″	
25(1″)	130	169(165)	70	1″	4(3.8)
32(1¼″)	130	169(165)	70	1¼″	

* Figures in ( ) are for AF-4M Type.

AIR DISCHARGE CHART

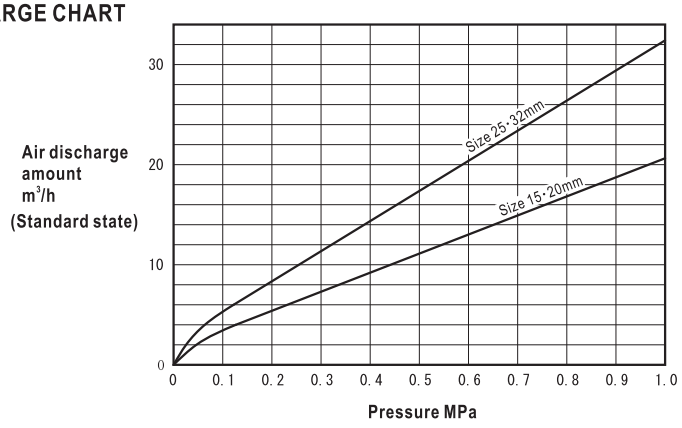

CONSTRUCTION (AF-4S, 4CN Type)

The structure of AF-4M Type is slightly different from the structure shown in the figure.

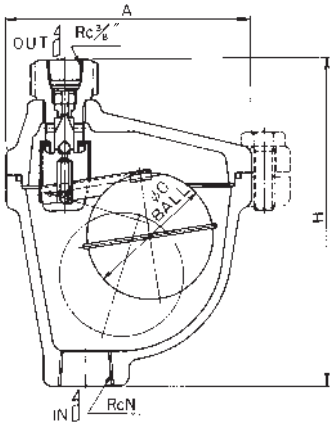

POINTS FOR INSTALLATION

- Install the product vertically to pipe (deviation of verticality: 5°).
- Before installation, remove all foreign matters in pipe and equipment.
- Install stop valve at the inlet side to allow water supply to be stopped before maintenance works. Use sluice valve or ball valve that can be switched between water and air.
- The outlet side should be piped to waterspout as a countermeasure for possible water leakage. The end of the piping for discharge should not be submerged into water.
- Apply thermal insulation on air vent valve if:

① There is risk of freezing.

② For AF-4CN Type, there is a temperature difference of 40℃ or more between the valve and ambient temperature.

PIPING EXAMPLE

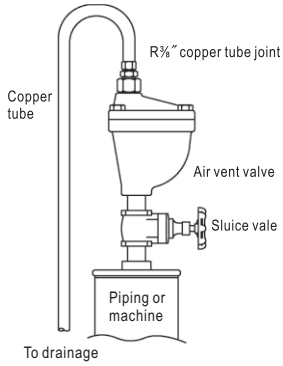

AF-5N Type Air Vent Valve

Made of bronze, 1.6MPa

Air vent valve with bronze body for high-pressure liquid. Filter (muffler) embedded to reduce noise that occurs when high-pressure air is discharged.

FEATURES

- Bronze body, large discharge amount, applicable pressure Max.1.6MPa.
- Head swinging valve disc for air tightness.
- Filter (muffler) embedded at outlet side reduces noise that occurs when air is discharged.

SPECIFICATIONS

Model name	AF-5N
Code name	**AF5N-J**
Size	15・20・25(½″・¾″・1″)
Applicable fluid	Water, hot water & oil
Fluid temperature	0.85 or more
Fluid specific gravity	5~90℃*1.
Applicable pressure	Max. 1.6MPa*2.
End connection	Screwed JIS Rc
Materials	Body(Cast bronze), Disc & Seat(Stainless steel), Float(Stainless steel)
Valve body pressure test	Hydraulic 2.4MPa

＊1. Applicable temperature Max. 150℃ is available upon your request.
＊2. For products with applicable pressure Max. 2.0 MPa, please contact our agent in your area. (The main body pressure test of these products is conducted at 2.4 MPa.)

AIR DISCHARGE CHART

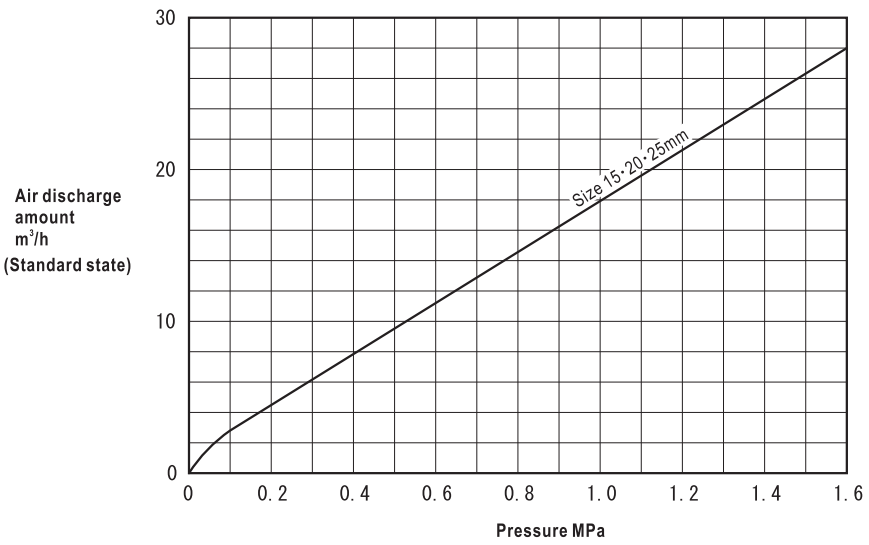



CONSTRUCTION (Unit:mm)

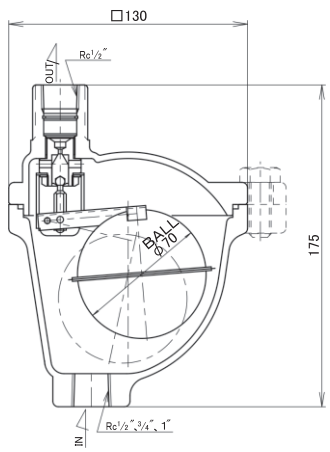

POINTS FOR INSTALLATION

- Install the product vertically to pipe (deviation of verticality: 5°).
- Before installation, remove all foreign matters in pipe and equipment.
- Install stop valve at the inlet side to allow water supply to be stopped before maintenance works. Use sluice valve or ball valve that can be switched between water and air, or a ball valve.
- The outlet side should be piped to waterspout as a countermeasure for possible water leakage. The end of the piping for discharge should not be submerged into water.
- Apply thermal insulation on air vent valve if there is risk of freezing.

PIPING EXAMPLE

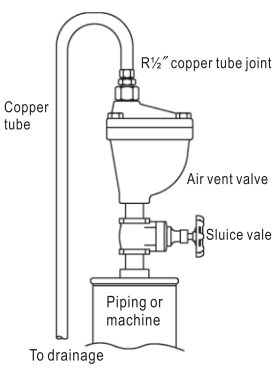

AF-6N Type Air Vent Valve

for Building Equipments, Apartments, Hot Water Boiler, etc.

Made of brass, 1.0MPa

Small air vent valve for pipeline, hot water boiler, fan coil, small to medium pressure tank, solar system, etc.

Dispersing method allows stable operation and prevents air venting with water.

The air discharge side is in a shape suitable for tube joint.



FEATURES

- Small valve, applicable pressure up to 1.0MPa.
- With manual stopping device.

SPECIFICATIONS

Model name	AF-6N
Code name	**AF6N-F**
Size	15・20・25(½″・¾″・1″)
Applicable fluid	Water & hot water
Fluid temperature	5~100℃
Applicable pressure	Max. 1.0MPa
End connection	Screwed JIS R
Materials	Body(Brass, Nickel-chrome plated), Disc(Synthetic rubber), Float(Polypropylene)
Valve body pressure test	Hydraulic 1.75MPa

CONSTRUCTION (Unit:mm)

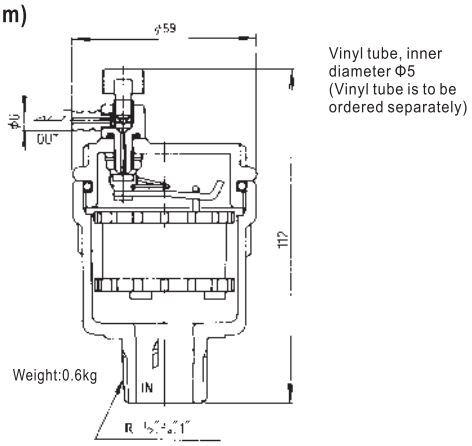

AIR DISCHARGE CHART

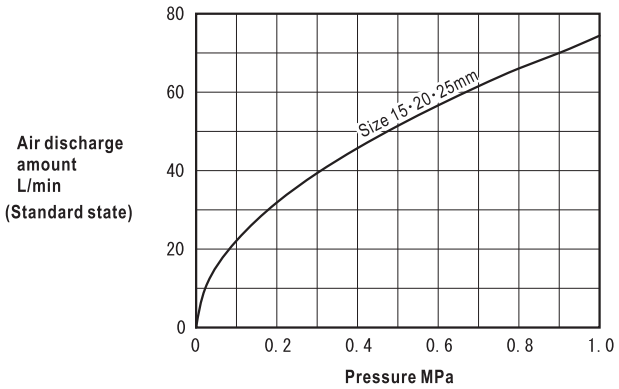

PIPING EXAMPLE

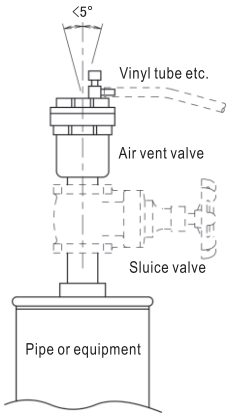

POINTS FOR INSTALLATION

- Install the product vertically to pipe (deviation of verticality: 5°).
- Before installation, remove all foreign matters in pipe and equipment.
- Install stop valve at the inlet side to allow water supply to be stopped before maintenance works. Use sluice valve or ball valve that can be switched between water and air.
- In the case of indoor installation, extend the valve with vinyl tube or pipe to drain ditch. The end of such tube or pipe for discharge should not be submerged into water.
- Turn the knob to stop water leakage.
- Apply thermal insulation on air vent valve if there is risk of freezing.

AF-17N Type Air Vent Valve

for Building Equipments, Apartments, Hot Water Boiler, etc.

Made of bronze, 1.0MPa

Small air vent valve for pipeline, hot water boiler, fan coil, small to medium pressure tank, solar system, etc.

Dispersing method allows stable operation and prevents air venting with water.

Air vent valve with bronze body.The outlet is in a shape of female screw, or with union joint or tube joint.





w/union joint w/tube joint

FEATURES

- Compact design applicable pressure up to 1.0MPa.
- With manual stopping device.

SPECIFICATIONS

Model name	AF-17N		
Code name	AF17N-FU	AF17N-FT	AF17N-FS
Outlet connection type	With union joint	With tube joint	Screwed JIS Rc¼″
Size	15・20・25(½″・¾″・1″)		
Applicable fluid	Water & hot water		
Fluid temperature	5~100℃		
Applicable pressure	Max. 1.0MPa		
End connection	Screwed JIS R		
Materials	Body(Cast bronze), Disc(Synthetic rubber), Float(Polypropylene)		
Valve body pressure test	Hydraulic 1.75MPa		
Accessories	Union joint Outer diameter Φ8 for copper tube	Tube joint, Hose band Vinyl tube(500mm)	—

CONSTRUCTION (Unit:mm)

JIS Rc¼″

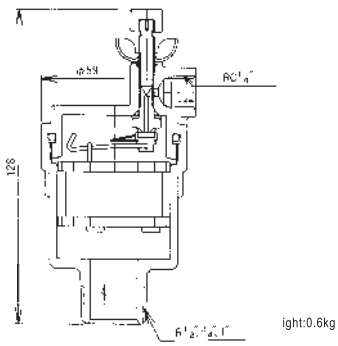

Union joint
for copper tube of Φ8
outer diameter

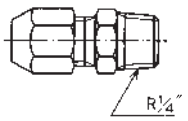

Tube joint
for Φ6×Φ8 vinyl tube

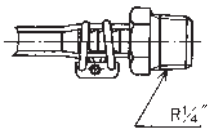

AIR DISCHARGE CHART

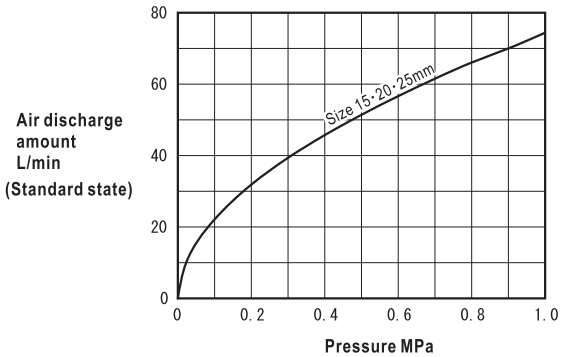

PIPING EXAMPLE

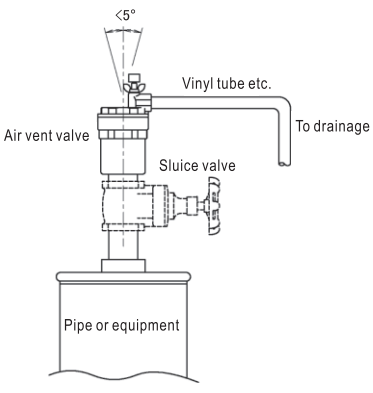

POINTS FOR INSTALLATION

- Install the product vertically to pipe (deviation of verticality: 5°).
- Before installation, remove all foreign matters in pipe and equipment.
- Install stop valve at the inlet side to allow water supply to be stopped before maintenance works. Use sluice valve or ball valve that can be switched between water and air.
- In the case of indoor installation, extend the valve with vinyl tube or pipe to drain ditch. The end of such tube or pipe for discharge should not be submerged into water.
- Turn the knob to stop water leakage.
- Apply thermal insulation on air vent valve if there is risk of freezing.

AF-9, 10 Type Series Air Vent Valve

Made of stainless steel, 0.3, 1.0MPa

for Building Equipments, Factory Equipments, Absorption Side of Pump or Sealed Circuit (AF-9), etc.

Corrosion resistant with stainless steel body and strainer embedded, AF-10 Type series are durable air vent valves that can absorb and vent air.

AF-9 Type series have check valve embedded and are designed to prevent air from being absorbed into the valve even when there is negative pressure at the inlet side of air vent valve. Therefore, they are ideal for applications at air absorbing side of pump or sealed circuit of ventilation system where onlyventilation is required, but not air air absorption.



AF-9 Type　　AF-10 Type



w/union joint　　w/tube joint

PIPING EXAMPLE

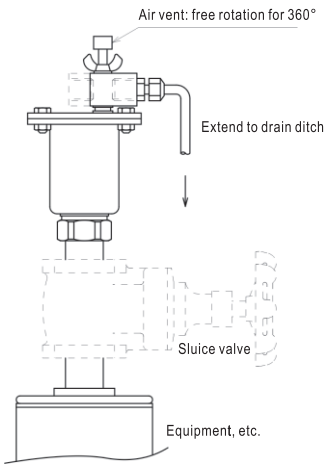

FEATURES

- Embedded strainer allows easy design and installation.
- Corrosion resistant, durable body made of stainless steel.
- The air vent can rotate for 360°, allows easy installation.
- With manual stopping device.
- Does not absorb air even when there is negative pressure; suitable for the air absorbing side of pump (AF-9 Type series)

SPECIFICATIONS

		With no-air suction device					
Model name		AF-9	AF-9H	AF-9L	AF-9HL	AF-10	AF-10H
Code name & Type	**JIS Rc⅜″**	**AF9-D**	**AF9H-D**	**AF9-DL**	**AF9H-DL**	**AF10-D**	**AF10H-D**
	Union joint	**AF9-DU**	**AF9H-DU**	**AF9-DLU**	**AF9H-DLU**	**AF10-DU**	**AF10H-DU**
	Tube joint	**AF9-DT**	–	**AF9-DLT**	–	**AF10-DT**	–
Size		15・20・25(½″・¾″・1″)					
Applicable pressure		Max. 1.0MPa		Max. 0.3MPa		Max. 1.0MPa	
Fluid temperature		5~90℃	5~150℃	5~90℃	5~150℃	5~90℃	5~150℃
Applicable fluid		Water & hot water				Water, hot water & oil(S.G.:0.8 or over *)	
End connection		Inlet:Screwed JIS R, Outlet:Screwed JIS Rc⅜″					
Materials		Body(Stainless steel), Disc(Synthetic rubber), Float(Stainless steel)					
Valve body pressure test		Hydraulic 1.75MPa					
Accessories		Manual shut off knob, Strainer, Check valve				Manual shut off knob, Strainer	

* For products applicable to specific gravity 0.7~0.8, please contact our agent in your area.

CONSTRUCTION (Unit:mm)

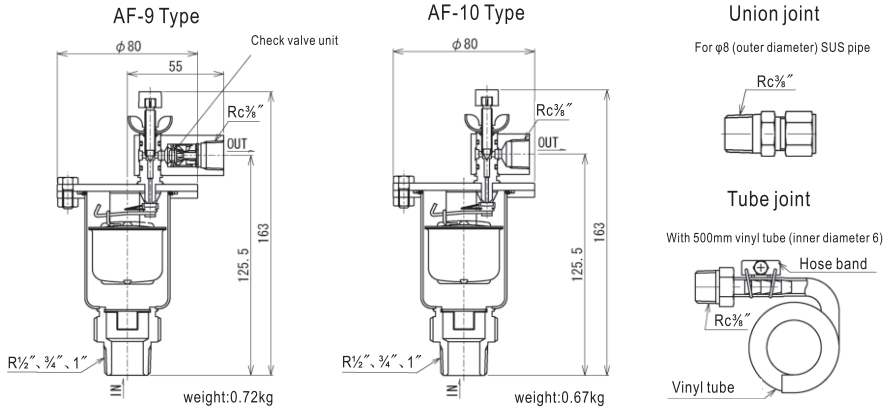

AIR DISCHARGE CHART(Size 15~25mm)

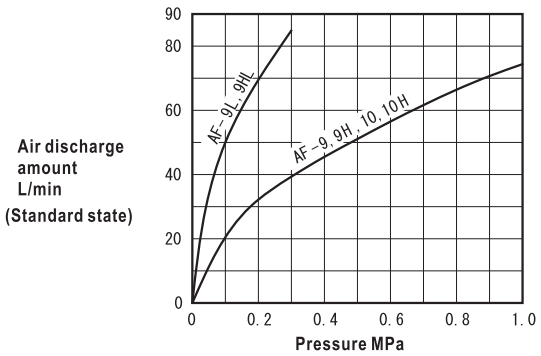

Points for installation

- Install the product vertically to pipe (deviation of verticality: 5°).
- Before installation, remove all foreign matters in pipe and equipment.
- Install stop valve at the inlet side to allow water supply to be stopped before maintenance works. Use sluice valve or ball valve that can be switched between water and air, or a ball valve.
- In the case of indoor installation, extend the valve with pipe to drain ditch. The end of such pipe for discharge should not be submerged into water.
- When water leakage occurs, loosen the nut and rotate the switch. The leakage will be stopped.
- Apply thermal insulation on air vent valve if there is risk of freezing.

BELLOWS EXPANSION JOINTS SLEEVE EXPANSION JOINTS & BALL JOINTS

10

Expansion joints or ball joints absorb expansion, contraction, deflection, twisting, distorsion, etc. of the piping caused by the change of temperature, ground sinking, earthquake, etc.
Select most suitable item for the purpose from the below listed.

■ BELLOWS EXPANSION JOINTS

Model name	End connection	Size	Applicable pressure(MPa)	Expansion amount		Page
				Expansion	Contraction	
JB-13	Flanged	20~300(¾″~12″)	Max. 1.0	10	25	174
JB-14				20	50	
JB-21	Flanged	20~300(¾″~12″)	Max. 1.0	10	25	175
JB-22				20	50	
JB-15	Socket brazing	20~32(¾″~1¼″)	Max. 1.0	10	30	176
		40~100(1½″~4″)			35	
JB-16		20~32(¾″~1¼″)		20	60	
		40~100(1½″~4″)			70	
JB-23	Flanged	20~300(¾″~12″)	Max. 2.0	10	25	177
JB-24				20	50	
JB-17	Flanged	20~250(¾″~10″)	Max. 1.6, 2.0	10	35	178
JB-18				20	70	

■ SLEEVE EXPANSION JOINTS

Model name	End connection	Size	Applicable pressure(MPa)	Expansion amount		Page
				Expansion	Contraction	
JS-5HF	Flanged	20~300(¾″~12″)	Max. 1.0	20	80	182
JS-6HF				40	160	
JS-7HF			Max. 2.0	20	80	
JS-8HF				40	160	
JS-5HW	Butt-weld	20~300(¾″~12″)	Max. 1.0	20	80	183
JS-6HW				40	160	
JS-7HW			Max. 2.0	20	80	
JS-8HW				40	160	

■ BALL JOINTS

Model name	End connection	Size	Applicable pressure(MPa)	Max. displacement angle	Page
JU-1	Screwed	20~50(¾″~2″)	Max. 1.0	30°	186
JU-3F	Flanged	50~300(2″~12″)	Max. 1.0	Size 50~100mm : 20° Size 125~300mm : 15°	187
JU-3W	Butt-welded				
JU-4F	Flanged		Max. 2.0		
JU-4W	Butt-welded				

JB-13, 14 Type Bellows Expansion Joint

for Building・Air Conditioning Equipments, Factory Equipments, etc.

Compliant with JIS

JIS B 2352 Bellows Type Expansion Joint (mainly for piping of air conditioning and sanitary systems).
Absorb expansion or contraction by temperature changes in the axial direction of pipe.



JB-13 Type



JB-14 Type

CONSTRUCTION

JB-13 Type

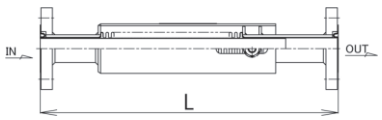

JB-14 Type

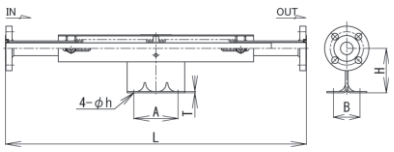

Note:
1.Depending on size, the structure may vary.
2.The size up to 400mm is available upon your request (see the following table for max. working pressure and test pressure).

(MPa)

Size	Applicable pressure	Pressure test
350(14″)	1.0	1.5
400(16″)	0.8	1.2

FEATURES

- Stainless steel bellows with internal pipe manufactured using exclusive formation and fixing method; highly durable and corrosion resistant.
- 20~40% lighter than prior products.

SPECIFICATIONS

Model name(Type)	JB-13(Single)	JB-14(Double)
Code name	JB13-N	JB14-N
Applicable fluid	Steam, air, inert gases, cold or hot water & oils	
Fluid temperature	Max. 220℃	
Applicable pressure	Max. 1.0MPa	
End connection	Flanged JIS 10KRF	
Materials	Flange(Mild steel), External sleeve(Carbon steel or Mild steel), Internal sleeve & Bellows(Stainless steel)	
Pressure test	Hydraulic 1.5MPa	
Expansion amount	35mm	70mm

DIMENSIONS JB-13 Type (Single Type)

(mm)

Size	L	Expansion amount		Mass(kg)
		Expansion	Contraction	
20(¾″)	365	10	25	4
25(1″)	365	10	25	4
32(1¼″)	365	10	25	5.5
40(1½″)	365	10	25	5.5
50(2″)	365	10	25	7.5
65(2½″)	415	10	25	10.5
80(3″)	415	10	25	12
100(4″)	415	10	25	16
125(5″)	440	10	25	22
150(6″)	440	10	25	29
200(8″)	440	10	25	49
250(10″)	465	10	25	59
300(12″)	465	10	25	95

Flange code JIS 10KRF

DIMENSIONS JB-14 Type (Double Type)

(mm)

Size	L	Expansion amount		H	A	B	T	h	Mass(kg)
		Expansion	Contraction						
20(¾″)	680	20	50	100	100	60	3.2	12	6
25(1″)	680	20	50	100	100	60	3.2	12	6
32(1¼″)	680	20	50	120	100	70	3.2	12	9
40(1½″)	680	20	50	120	100	70	3.2	12	9
50(2″)	680	20	50	130	100	80	3.2	15	12
65(2½″)	780	20	50	140	120	100	3.2	15	17
80(3″)	780	20	50	150	120	110	4.5	15	20
100(4″)	880	20	50	170	120	130	4.5	19	30
125(5″)	880	20	50	200	120	150	4.5	19	35
150(6″)	930	20	50	220	160	180	6.0	23	62
200(8″)	930	20	50	250	160	220	6.0	25	91
250(10″)	980	20	50	300	180	280	6.0	27	103
300(12″)	980	20	50	350	200	300	19	28	198

Flange code JIS 10KRF

POINTS FOR INSTALLATION

- The arrow mark on the main body should match with the flow of fluid.
- Make sure no torsional stress is applied on bellows.
- Remove nut for fixing faces and washers after piping is completed.

AXIAL DIRECTION LOAD ON MAIN FIXING POINT

Items \ Size(mm)		20	25	32	40	50	65	80	100	125	150	200	250	300
Bellows' effective area	Ae(mm²)	880	880	1960	1960	3130	4950	6570	11100	17700	24400	42900	62700	92100
Spring constant	K(N/mm)	28	28	54	54	68	90	91	185	255	372	590	648	1240
Load by max. working pressure at 1.0MPa	Fp(N)	880	880	1960	1960	3130	4950	6570	11100	17700	24400	42900	62700	92100
Load by max. contraction at 25mm	Fe(N)	700	700	1350	1350	1700	2250	2280	4630	6380	9300	14750	16200	31000
Total load by max. working pressure	Fm=Fp+Fe(N)	1580	1580	3310	3310	4830	7200	8850	15730	24080	33700	57650	78900	123100
Load by hydraulic test pressure at 1.5MPa	(N)	1320	1320	2940	2940	4700	7430	9860	16650	26550	36600	64350	94050	138150

JB-21, 22 Type Bellows Expansion Joint

for Building・Air Conditioning Equipments, Factory Equipments, etc.

Compliant with JIS
Double-layer Bellows

JIS B 2352 Bellows Type Expansion Joint (mainly for piping of air conditioning and sanitary systems).

Absorb expansion or contraction by temperature changes in the axial direction of pipe.



JB-21 Type



JB-22 Type

FEATURES

- Double-layer bellows with improved durability.
- Except for flange, all parts including bellows are made of stainless steel, and the part contacting with fluid is made of stainless steel.
- Loose flange for end connection; preventing shifting in the circumferential direction of bolt hole.
- Double joint allows adjustment (inching adjustment on height and in forward and backward directions) of the position of installation foot and easier installation (JB-22 Type, size up to150mm).

SPECIFICATIONS

Model name(Type)	JB-21(Single)	JB-22(Double)
Code name	**JB21-N**	**JB22-N**
Applicable fluid	Steam, air, inert gases, cold or hot water & oils	
Fluid temperature	Max. 220℃	
Applicable pressure	Max. 1.0MPa	
End connection	Flanged JIS 10K(Loose type)	
Materials	Flange(Mild steel*), External sleeve(Stainless steel), Internal sleeve & Bellows(Stainless steel)	
Pressure test	Hydraulic 1.5MPa	
Expansion amount	35mm	70mm

* JB-21 and JB-22 Types with Stainless steel flange are available upon your request. (Code name: JB21-K, JB22-K)

DIMENSIONS JB-21 Type (Single Type)

(mm)

Size	L	Expansion amount		Mass(kg)
		Expansion	Contraction	
20(¾″)	365	10	25	2.5
25(1″)	365	10	25	3.5
32(1¼″)	365	10	25	4.5
40(1½″)	365	10	25	5
50(2″)	365	10	25	6
65(2½″)	415	10	25	8.5
80(3″)	415	10	25	10
100(4″)	415	10	25	12.5
125(5″)	440	10	25	18.5
150(6″)	440	10	25	21
200(8″)	440	10	25	33
250(10″)	465	10	25	47
300(12″)	465	10	25	100

DIMENSIONS JB-22 Type (Double Type)

Flange code JIS 10K
(mm)

Size	L	Expansion amount		H	J	K	h_1	Mass(kg)
		Expansion	Contraction					
20(¾″)	680	20	50	100	100	60	12	4
25(1″)	680	20	50	100	100	60	12	5.5
32(1¼″)	680	20	50	120	100	70	12	7
40(1½″)	680	20	50	120	100	70	12	7.5
50(2″)	680	20	50	130	100	80	15	9.5
65(2½″)	780	20	50	140	120	100	15	13
80(3″)	780	20	50	150	120	110	15	17
100(4″)	880	20	50	170	120	130	19	22
125(5″)	880	20	50	200	120	150	19	30.5
150(6″)	930	20	50	220	160	180	23	39
200(8″)	930	20	50	250	160	220	25	60
250(10″)	980	20	50	300	180	280	27	82
300(12″)	980	20	50	350	200	300	27	170

Flange code JIS 10K

CONSTRUCTION

JB-21 Type

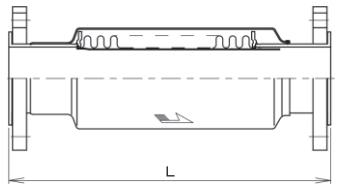

JB-22 Type

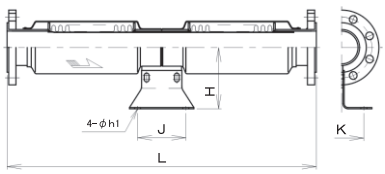

Note:
1.Depending on size, the structure may vary.
2.The size above 350mm is available upon your request. For detail, please contact our agent in your area.

POINTS FOR INSTALLATION

- The arrow mark on the main body should match with the flow of fluid.
- Make sure no torsional stress is applied on bellows.
- Remove set bolt for fixing faces after piping is completed.

AXIAL DIRECTION LOAD ON MAIN FIXING POINT

Items \ Size(mm)		20	25	32	40	50	65	80	100	125	150	200	250	300
Bellows' effective area	Ae(mm²)	650	830	1440	1770	2990	4460	6840	11930	18610	25790	42940	62640	98000
Spring constant	K(N/mm)	50	52	53	53	80	87	155	185	210	290	490	540	700
Load by max. working pressure at 1.0MPa	Fp(N)	650	830	1440	1770	2990	4460	6840	11930	18610	25790	42940	62640	98000
Load by max. contraction at 25mm	Fe(N)	1250	1300	1325	1325	2000	2175	3875	4625	5250	7250	12250	13500	17500
Total load by max. working pressure	Fm=Fp+Fe(N)	1900	2130	2765	3095	4990	6635	10715	16555	23860	33040	55190	76140	115500
Load by hydraulic test pressure at 1.5MPa	(N)	975	1245	2160	2655	4485	6690	10260	17895	27915	38685	64410	93960	147000

JB-15, 16 Type Bellows Expansion Joint

For copper pipe

Absorb expansion and contraction of cooper pipes due to change of temperature in air conditioning and sanitary systems.



JB-15 Type



JB-16 Type

FEATURES

- With internal pipe inserted, the pressure loss of fluid is reduced and the flow is smooth. In addition, since the buckling of bellows is prevented, the bellows has a longer service life.
- Made of stainless steel, solid and corrosion resistant.
- Longer joint allows easy installation. In the case bellows is damaged, the parts around bellows can be replaced without replacing the brazed parts.

SPECIFICATIONS

Model name(Type)	JB-15(Single)	JB-16(Double)
Code name	JB15-J	JB16-J
Applicable fluid	Cold or hot water, air & oils	
Fluid temperature	Max. 100℃	
Applicable pressure	Max. 1.0MPa	
End connection	Brazed socket type	
Materials	End part(Copper tube), External sleeve(Carbon steel or Steel gas pipe), Internal sleeve & Bellows(Stainless steel)	
Pressure test	Hydraulic 1.5MPa	
Expansion amount	Size 20~32mm:40mm, Size 40~100mm:45mm	Size 20~32mm:80mm, Size 40~100mm:90mm

DIMENSIONS JB-15 Type (Single Type)

(mm)

Size	L	Expansion amount		d	ℓ	Mass(kg)
		Expansion	Contraction			
20(¾″)	400	10	30	22.4	17	2.5
25(1″)	345	10	30	28.8	19	2.5
32(1¼″)	355	10	30	35.1	21	2.7
40(1½″)	385	10	35	41.5	24	3.1
50(2″)	405	10	35	54.2	30	4.7
65(2½″)	425	10	35	67.0	33	6
80(3″)	445	10	35	79.7	37	8.7
100(4″)	500	10	35	105.1	47	13.4

DIMENSIONS JB-16 Type (Double Type)

(mm)

Size	L	Expansion amount		d	ℓ	H	A	B	T	h	Mass (kg)
		Exp.	Cont.								
20(¾″)	520	20	60	22.4	17	80	90	45	3.2	12	4
25(1″)	465	20	60	28.8	19	80	90	45	3.2	12	4
32(1¼″)	495	20	60	35.1	21	80	90	45	3.2	12	4.3
40(1½″)	525	20	70	41.5	24	89	100	60	3.2	12	5.4
50(2″)	575	20	70	54.2	30	95	100	60	3.2	12	7.4
65(2½″)	605	20	70	67.0	33	127	100	70	4.5	19	10.1
80(3″)	620	20	70	79.7	37	127	100	70	4.5	19	14
100(4″)	700	20	70	105.1	47	152	135	95	4.5	19	21.5

CONSTRUCTION

JB-15 Type

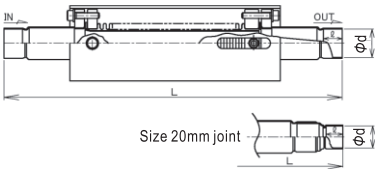

JB-16 Type

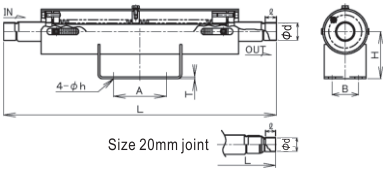

POINTS FOR INSTALLATION

- The arrow mark on the main body should match with the flow of fluid.
- Make sure no torsional stress is applied on bellows.
- When performing brazing, protect the joint of copper pipe using wet cloth.

AXIAL DIRECTION LOAD ON MAIN FIXING POINT

Items \ Size(mm)		20	25	32	40	50	65	80	100
Bellows' effective area	Ae(mm²)	892	892	1380	1960	3170	5150	7080	11100
Spring constant	K(N/mm)	19	19	40	40	41	48	85	90
Load by max. working pressure at 1.0MPa	Fp(N)	892	892	1380	1960	3170	5150	7080	11100
Load by max. contraction at 25mm	Fe(N)	570	570	1200	1400	1435	1680	2975	3150
Total load by max. working pressure	Fm=Fp+Fe(N)	1462	1462	2580	3360	4605	6830	10055	14250
Load by hydraulic test pressure at 1.5MPa	(N)	1338	1338	2070	2940	4755	7725	10620	16650

JB-23, 24 Type Bellows Expansion Joint

for Building・Air Conditioning Equipments, Factory Equipments, etc.

For high pressure application Max. 2.0MPa
Double-layer Bellows

Corrosion resistant, durable stainless steel bellows expansion joint, suitable for pressure up to 2.0MPa. The face-to-face dimensions are the same as those of JIS JB-21, 22 Type compliant with JIS standards.



JB-23 Type



JB-24 Type

CONSTRUCTION

JB-23 Type

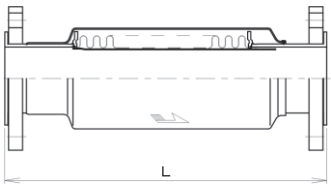

JB-24 Type

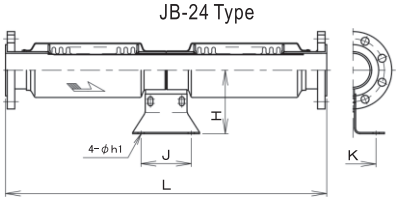

Note:
1.Depending on size, the structure may vary.
2.Size 350mm or larger is availabe upon your request (For details, please contact our local agent).

FEATURES

- Double-layer bellows with improved durability.
- Except for flange, all parts including bellows are made of stainless steel, and the part contacting with fluid is made of stainless steel.
- Loose flange for end connection; preventing shifting in the circumferential direction of bolt hole.
- Double joint allows adjustment (inching adjustment on height and in forward and backward directions) of the position of installation foot and easier installation (JB-24 Type, size up to 150mm).

SPECIFICATIONS

Model name(Type)	JB-23(Single)	JB-24(Double)
Code name	**JB23-N**	**JB24-N**
Applicable fluid	Steam, air, inert gases, cold or hot water & oils	
Fluid temperature	Max. 250℃	
Applicable pressure	Max. 2.0MPa	
End connection	Flanged JIS 20K (Loose type)	
Materials	Flange(Carbon steel*), External sleeve(Stainless steel), Internal sleeve & Bellows(Stainless steel)	
Pressure test	Hydraulic 3.0MPa	
Expansion amount	35mm	70mm

* JB-23 and JB-24 Type with stainless steel flange are available upon your request. (Code name:JB23-K, JB24-K Type)

DIMENSIONS JB-23 Type (Single Type)

(mm)

Size	L	Expansion amount		Mass(kg)
		Expansion	Contraction	
20(¾″)	365	10	25	3
25(1″)	365	10	25	4
32(1¼″)	365	10	25	5
40(1½″)	365	10	25	5.5
50(2″)	365	10	25	6.5
65(2½″)	415	10	25	9
80(3″)	415	10	25	12.5
100(4″)	415	10	25	16
125(5″)	440	10	25	24.5
150(6″)	440	10	25	28.5
200(8″)	440	10	25	43
250(10″)	465	10	25	67
300(12″)	465	10	25	130

Flange code JIS 20K

DIMENSIONS JB-24 Type (Double Type)

(mm)

Size	L	Expansion amount		H	J	K	h_1	Mass(kg)
		Expansion	Contraction					
20(¾″)	680	20	50	100	100	60	12	4.5
25(1″)	680	20	50	100	100	60	12	6
32(1¼″)	680	20	50	120	100	70	12	7.5
40(1½″)	680	20	50	120	100	70	12	8
50(2″)	680	20	50	130	100	80	15	10
65(2½″)	780	20	50	140	120	100	15	13.5
80(3″)	780	20	50	150	120	110	15	19.5
100(4″)	880	20	50	170	120	130	19	25.5
125(5″)	880	20	50	200	120	150	19	36.5
150(6″)	930	20	50	220	160	180	23	46.5
200(8″)	930	20	50	250	160	220	25	70
250(10″)	980	20	50	300	180	280	27	102
300(12″)	980	20	50	350	200	300	27	200

Flange code JIS 20K

POINTS FOR INSTALLATION

- The arrow mark on the main body should match with the flow of fluid.
- Make sure no torsional stress is applied on bellows.
- Remove set bolt for fixing faces after piping is completed.

AXIAL DIRECTION LOAD ON MAIN FIXING POINT

Items \ Size(mm)		20	25	32	40	50	65	80	100	125	150	200	250	300
Bellows' effective area	Ae(mm²)	650	830	1440	1770	2990	4460	6840	11930	18610	25790	42940	62640	98000
Spring constant	K(N/mm)	50	52	53	53	80	87	155	185	210	290	490	540	700
Load by max. working pressure at 1.0MPa	Fp(N)	1300	1660	2880	3540	5980	8920	13680	23860	37200	51580	85800	125280	196000
Load by max. contraction at 25mm	Fe(N)	1250	1300	1325	1325	2000	2175	3875	4625	5250	7250	12250	13500	17500
Total load by max. working pressure	Fm=Fp+Fe(N)	2550	2960	4205	4865	7980	11095	17555	28485	42470	58830	98130	138780	213500
Load by hydraulic test pressure at 3.0MPa	(N)	1950	2490	4320	5310	8970	13380	20520	35790	55830	77370	128820	187920	294000

JB-17, 18 Type Bellows Expansion Joint

1.6, 2.0MPa

Durable, corrosion resistant 2.0MPa expansion joint with stainless steel bellows. The face-to-face dimensions are the same as those of JB-13, 14 Type compliant with JIS standards.



JB-17 Type



JB-18 Type

FEATURES

- The part contacting with liquid is made of durable and corrosion-resistant stainless steel.
- Absorb expansion and contraction of pipe by thermal changes in the axial direction .

SPECIFICATIONS

Model name(Type)	JB-17(Single)	JB-18(Double)
Code name	**JB17-N**	**JB18-N**
Applicable fluid	Steam, air, inert gases, cold or hot water & oils	
Fluid temperature	Max. 250℃	
Applicable pressure	Max. 1.6, 2.0MPa	
End connection	Flanged JIS 16, 20KRF	
Materials	Flange(Carbon steel), External sleeve(Stainless steel), Internal sleeve & Bellows(Stainless steel)	
Pressure test	1.5 times of flange rated pressure. (Hydraulic)	
Expansion amount	45mm	90mm

DIMENSIONS JB-17 Type (Single Type)

(mm)

Size	L	Expansion amount		Mass(kg)
		Expansion	Contraction	
20(¾″)	365	10	35	7
25(1″)	365	10	35	8
32(1¼″)	365	10	35	10
40(1½″)	365	10	35	10
50(2″)	365	10	35	12
65(2½″)	415	10	35	17
80(3″)	415	10	35	19
100(4″)	415	10	35	24
125(5″)	440	10	35	41
150(6″)	440	10	35	53
200(8″)	440	10	35	63
250(10″)	465	10	35	81

Flange code JIS 20KRF

DIMENSIONS JB-18 Type (Double Type)

(mm)

Size	L	Expansion amount		H	A	B	T	h	Mass(kg)
		Expansion	Contraction						
20(¾″)	680	20	70	100	100	60	9	12	12
25(1″)	680	20	70	100	100	60	9	12	13
32(1¼″)	680	20	70	120	100	70	9	12	17
40(1½″)	680	20	70	120	100	70	9	12	18
50(2″)	680	20	70	130	100	80	12	15	18
65(2½″)	780	20	70	140	120	100	12	15	26
80(3″)	780	20	70	150	120	110	12	15	32
100(4″)	880	20	70	170	120	130	16	19	45
125(5″)	880	20	70	200	120	150	16	19	67
150(6″)	930	20	70	220	160	180	16	23	92
200(8″)	930	20	70	250	160	220	16	25	125
250(10″)	980	20	70	300	180	280	16	27	173

Flange code JIS 20KRF

CONSTRUCTION

JB-17 Type

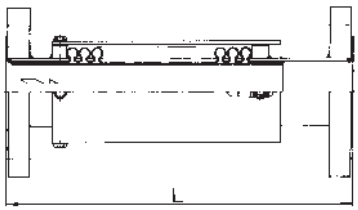

JB-18 Type

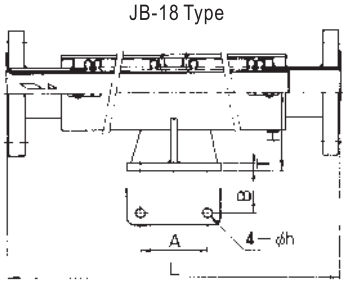

Depending on size, the structure may vary.

POINTS FOR INSTALLATION

- The arrow mark on the main body should match with the flow of fluid.
- Make sure no torsional stress is applied on bellows.
- Remove nuts and washers for fixing faces after piping is completed.

AXIAL DIRECTION LOAD ON MAIN FIXING POINT

Items \ Size(mm)		20	25	32	40	50	65	80	100	125	150	200	250
Bellows' effective area	Ae(mm²)	920	920	2020	2020	3130	5020	6640	11400	17700	24400	43400	62700
Spring constant	K(N/mm)	20	20	38	38	58	89	120	200	310	360	630	880
Load by max. working pressure at 1.0MPa	Fp(N)	1840	1840	4040	4040	6260	10040	13280	22800	35400	48800	86800	125400
Load by max. contraction at 35mm	Fe(N)	700	700	1330	1330	2030	3120	4200	7000	10850	12600	22050	30800
Total load by max. working pressure	Fm=Fp+Fe(N)	2540	2540	5370	5370	8290	13160	17480	29800	46250	61400	108850	156200
Load by hydraulic test pressure at 3.0MPa	(N)	2760	2760	6060	6060	9390	15060	19920	34200	53100	73200	130200	188100

DATA/JB Type Bellows Expansion Joint

■ ABOUT BELLOWS MATERIAL SUS316L (Stainless steel)

The JIS B 2352 Bellows Type Expansion Joint recommends SUS304, SUS304L, SUS316, SUS 316L, and others for making bellows. To ensure durability and corrosion resistance, which are extremely important parameters for high grade bellows, we selected SUS316L for making bellows and all parts that contact with fluid. With higher performance than SUS304, SUS316L is considered having the same or even higher characteristics than SUS304L. See the following table for characteristics of SUS316L and SUS304L.

■ COMPARISON BETWEEN SUS316L AND SUS304L

TABLE1. CHEMICAL COMPOSITION (%)

Type	Carbon C	Silicon Si	Manganese Mn	Phosphor P	Sulfur S	Nickel Ni	Chrome Cr	Molybdenum Mo
SUS316L	0.030 or less	1.00 or less	2.00 or less	0.045 or less	0.030 or less	12.00~15.00	16.00~18.00	2.00~3.00
SUS304L	0.030 or less	1.00 or less	2.00 or less	0.045 or less	0.030 or less	9.00~13.00	18.00~20.00	—

TABLE2. MECHANICAL PROPERTY

Type	Tensile test			Hardness test		
	Yield Strength N/mm^2	Tensile N/mm^2	Elongation %	HB	HRB	HV
SUS316L	175 or more	480 or more	40 or more	187 or less	90 or less	200 or less
SUS304L	175 or more	480 or more	40 or more	187 or less	90 or less	200 or less

TABLE3. ANTICORROSION

Type	All surface corrosion	Intercrystalline corrosion	Stress corrosion crack	Porous corrosion	Gap corrosion
SUS316L	○	○	◎	◎	◎
SUS304L	○	○	○	○	○

＊○:Superior ◎:Much superior

■ FIG.1 EXPANSION AND CONTRACTION OF 1m PIPE

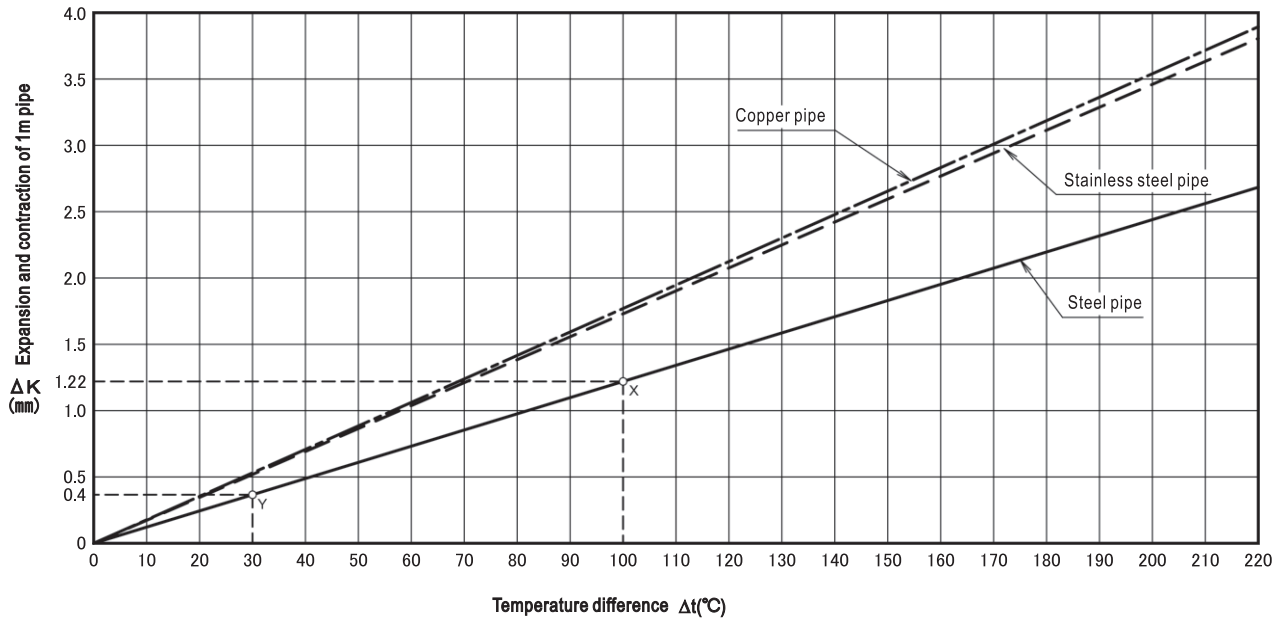

■ SELECTING EXPANSION JOINT

Determine the type and number of expansion joints based on the material of pipe and change of temperature, which are factors affecting expansion/contraction of pipe.

● Calculation $n = \frac{\Delta \ell}{\delta}$

$$\Delta \ell = \beta \times \Delta t \times \ell$$

n : number of joints
δ :max. expansion/contraction of joint (mm)
Δℓ : expansion/contraction of pipe (mm)
β : linear expansion coefficient of pipe (mm/m/℃)
Steel pipe (12.2×10^{-3})
Copper pipe (17.7×10^{-3})
Stainless steel pipe (17.3×10^{-3})

Δt : temperature difference (℃)
ℓ : length of pipe (m)

● Example

Under the following conditions:
Length of pipe (ℓ): 35m
Max. working temperature (t_1): 120℃
Min. ambient temperature (t_2): −10℃
Ambient temperature at the time of installation (t_3): 20℃
Determine the type and number of expansion joints.
The pipe is steel pipe and the joint is to be determined based on standard face-to-face dimensions.

DATA/JB Type Bellows Expansion Joint

Step 1: Calculate expansion/contraction of pipe

Temperature difference at the expansion side of pipe:

$\Delta t_1=t_1-t_3=120-20=100℃$

Temperature difference at the contraction side of pipe:

$\Delta t_2=t_3-t_2=20-(-10)=30℃$

According to point X in Fig.1,

Expansion of 1m pipe $\Delta k_1=1.22mm$

According to point Y in Fig.1,

Contraction of 1m pipe $\Delta k_2=0.366mm$

Therefore,

The expansion of 35m pipe is:

$\Delta \ell_1=k_1\times\ell$

$=1.22\times35=42.7mm$

The contraction is:

$\Delta \ell_2=k_2\times\ell$

$=0.366\times35=12.81mm$

Step 2: Determine type and number of joints

For selecting JIS certified JB-13, 21 (single type),

The expansion side of pipe (δ=25mm): $n=\frac{\Delta\ell_1}{\delta}=\frac{42.7}{25}=1.71$

The contraction side of pipe (δ=10mm): $n=\frac{\Delta\ell_2}{\delta}=\frac{12.81}{10}=1.281$

The number of joints should be the larger one, i.e., 2.

For selecting compliant with JIS JB-14, 22 (double type),

The expansion side of pipe (δ=50mm): $n=\frac{\Delta\ell_1}{\delta}=\frac{42.7}{50}=0.854$

The contraction side of pipe (δ=20mm): $n=\frac{\Delta\ell_2}{\delta}=\frac{12.81}{20}=0.641$

The number of joints should be the larger one, i.e., 1.

To select other types of joints, follow the same steps as above mentioned.

POINTS FOR INSTALLATION

- The arrow mark on the main body should match with the flow direction of fluid.
- Make sure no torsional stress is applied on bellows.
- The following parts are for fixing faces and need to be removed after piping is completed.

  JB-13~18: nut and washer

  JB-21~24: set bolt

POINTS FOR HANDLING

1. Fixing point

Fixing point with sufficient strength are necessary for installing expansion joint. The position and type of fixing point are the following.

① Main fixing point

- The end of straight pipe where closing plate is installed;
- Bending pipe where the direction of flow changes;
- Between two expansion joints, where reducer is used to change the diameter of pipe;
- Pipe between two expansion joints, where valve is installed;
- The inlet of branch pipe where free expansion joint is installed.

② Intermediate fixing point

- In the middle of two expansion joints between main fixing point;
- Anchor base (installation position) of double type expansion joint.

2. Guide and pipe support

① Guide

To ensure correct expansion and contraction of expansion joint, the axes of expansion joint and pipe must match with each other. In addition, it is necessary to use guides to transmit the force for the movement in axial direction to fixing points. The guides need to be installed according to the following intervals.

The deviation of pipe axes is ±2mm for size 125mm or smaller pipes, and ±3mm for size 150mm or larger pipes. The deviation of degree of parallelization of pipe should be within ±2°.

L_1: The interval between expansion joint and No.1 guide.

L_2: The interval between No.1 guide and No.2 guide.

L_3: The interval between No.2 guide and middle guide.

Load on main fixing point of main straight pipe Fm (N)

$Fm=Fp+Fe$

$Fp=Ae\times P$

$Fe=K\times S$

Load on main fixing of bending pipe Fb (N)

$Fb=2Fm\sin\frac{\theta}{2}+Fc$

$Fc=\left(\frac{2A\rho V^2}{g}\sin\frac{\theta}{2}\right)\times98.0665$

Load on intermediate fixing Fi (N)

$Fi=Fe$

Fp: Load in axial direction due to internal pressure	(N)
Fe: Load due to specified contraction	(N)
Ae: Effective area of bellows	(mm^2)
P : Working pressure	(MPa)
K : Bellows spring constant	(N/mm)
S : Expansion/contraction	(mm)
θ : Bending angle of pipe (See Fig.5 Piping example)	
Fc: Load due to centrifugal force of fluid	(N)
A : Cross sectional area of pipe	(cm^2)
ρ : Density of fluid	(g/cm^3)
V : Velocity of flow	(m/s)
g : Acceleration of gravity	($980cm/s^2$)

Fig.2-1 Interval of guides

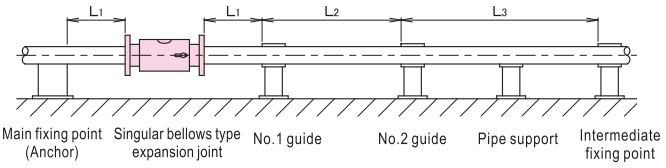

Fig.2-2 Example of roof piping

[Roof piping]

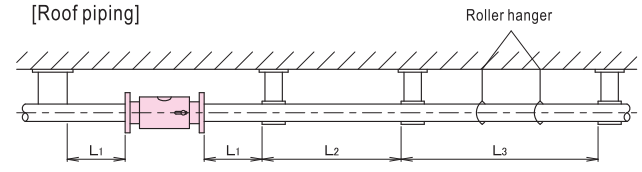

Note: The pipe may buckle if only roller hanger is used. In this case, guides are necessary.

DATA/JB Type Bellows Expansion Joint

The maximum interval between guides can be calculated using the following formula.
The interval (max.) between intermediate guides (L_3) can also be determined using Fig.3.

$L_1 \leqq 4D$

$L_2 \leqq 14D$

$L_3 \leqq \sqrt{\frac{\pi^2 EI}{fFm}}$ $\quad I = \frac{\pi}{64}(D^4 - d^4)$

L_1, L_2, L_3: Interval between guides (max.)	(mm)
D: External diameter of pipe	(mm)
d: Internal diameter of pipe	(mm)
E:Young's modulus at the designed temperature of pipe material	(N/mm^2)
Steel pipe 200℃:	$191\times10^3 N/mm^2$
Stainless steel pipe 200℃:	$183\times10^3 N/mm^2$
Copper pipe 200℃:	$116\times10^3 N/mm^2$
I: Secondary moment of the cross section of pipe	(mm^4)
f: Safety factor	(3 or larger)
Fm: Load on main fixing point	(N)

② Pipe supporting
Install roller support or roller hanger guide to prevent pipe from bending due the weight of pipe or fluid.

Fig.3 Max. interval between intermediate guides

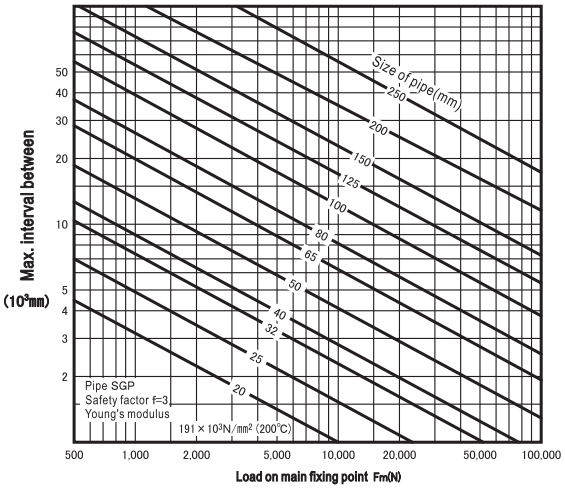

Note: See Page 185 for STPG (carbon steel)pipe.

Fig. 5 Piping example

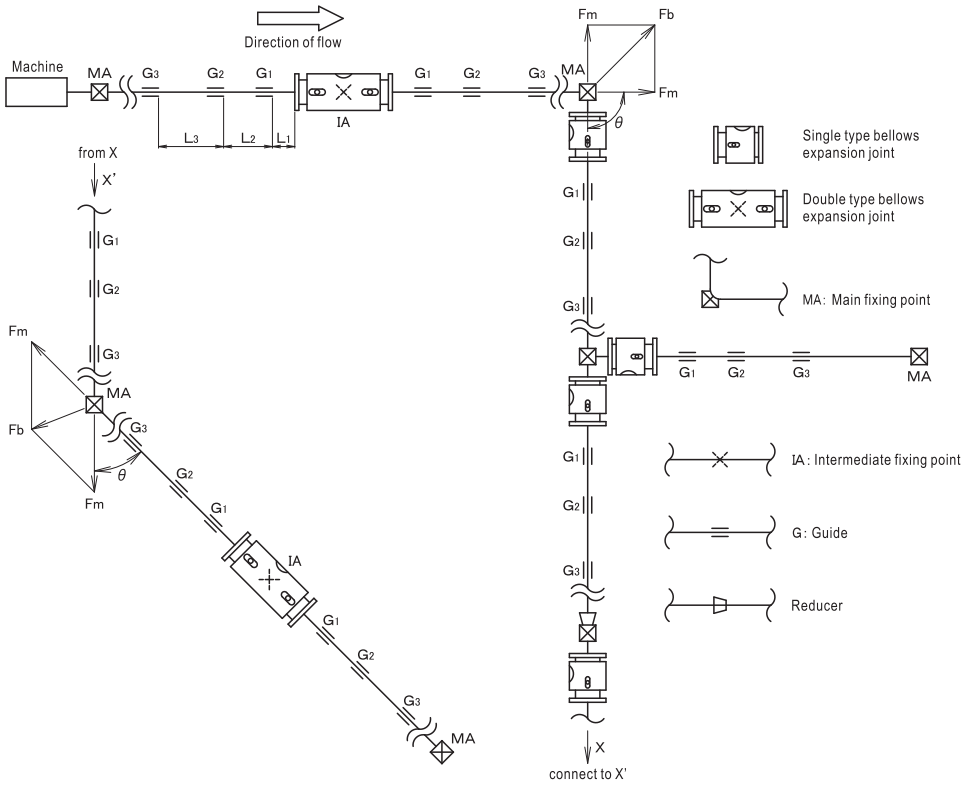

Fig.4 Fixing point and guide (example)

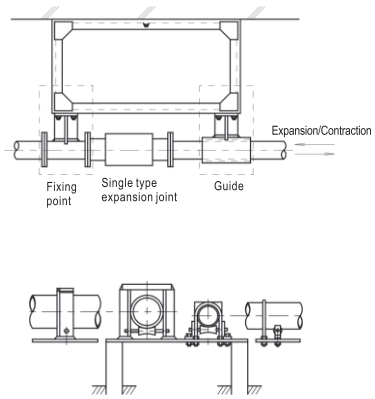

Note: Carry out axes matching before installing expansion joint.

JS Type Sleeve Expansion Joint

for Building・Air Conditioning Equipments, Factory Equipments, etc.

Flanged

Solutions for Pipe Expansion/Contraction, Ground Sinkage

Sleeve expansion joint absorbing expansion/contraetion of pipe in axial direction due to change of temperature.
Suitable for main pipeline in high buildings, area conditioning, plants, factories and hospitals. Also serve as countermeasure for ground sinkage and earthquake.

FEATURES

- Supper packing for high sealing performance.
- Safe structure.
- Large expansion/contraction.
- No need for lubrication.
- All stainless steel products are also suitable for water supply.

SPECIFICATIONS

Model name	JS-5HF	JS-6HF	JS-7HF	JS-8HF
Code name	**JS5HF-N**	**JS6HF-N**	**JS7HF-N**	**JS8HF-N**
Applicable fluid	Steam, air, gases, cold or hot water & oils			
Fluid temperature	Max. 220℃			
Applicable pressure	Max. 1.0MPa		Max. 2.0MPa	
End connection	Flanged JIS 10KFF		Flanged JIS 20KRF	
Materials	Sleeve(Stainless steel), External sleeve(Carbon steel), Packing(Graphite compound)			
	Flange(Mild steel)		Flange(Carbon steel)	
Pressure test	Hydraulic 1.5MPa		Hydraulic 3.0MPa	
Expansion amount	100mm	200mm	100mm	200mm
Expansion	20mm	40mm	20mm	40mm
Contraction	80mm	160mm	80mm	160mm

＊All stainless steel material is also available upon request.

DIMENSIONS

DIMENSIONS	L(mm)		D(mm)	Pressure receiving area of sleeve Ae(mm^2)	Friction resistance of sleeve μ(N)	Load on main fixing point (N)	
Model Name / Size	JS-5HF,7HF (Max. exp. 100mm)	JS-6HF,8HF (Max. exp. 200mm)				JS-5HF,6HF (at 1.0MPa)	JS-7HF,8HF (at 2.0MPa)
20(¾″)	380	560	83	530	1300	1900	2400
25(1″)	380	560	90	860	1600	2500	3400
32(1¼″)	380	560	100	1320	2000	3400	4700
40(1½″)	380	560	105	1730	2300	4100	5800
50(2″)	380	560	120	2460	2700	5200	7700
65(2½″)	430	600	135	4300	3600	8000	13000
80(3″)	430	600	145	5810	4200	11000	16000
100(4″)	430	640	185	9850	5400	16000	26000
125(5″)	500	640	210	14700	6600	22000	37000
150(6″)	500	690	235	20600	7800	29000	49000
200(8″)	500	690	300	35600	10300	46000	82000
250(10″)	580	740	350	54700	12700	68000	123000
300(12″)	580	740	415	77900	15200	94000	172000

Flange code JIS 10KFF, JIS 20KRF



CONSTRUCTION

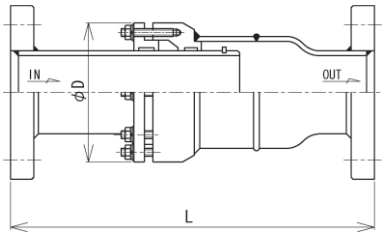

Depending on size, the structure may vary.

MASS

(kg)

Model Name / Size	JS-5HF	JS-6HF	JS-7HF	JS-8HF
20(¾″)	4.5	5.5	5	6
25(1″)	6.5	7	7	7.5
32(1 ¼″)	7.5	9.5	8	10
40(1 ½″)	8.5	10	9	10.5
50(2″)	10.5	12.5	11	13
65(2 ½″)	14.5	18.5	15	19
80(3″)	15.5	25.5	16.5	26.5
100(4″)	20	29.5	21	30.5
125(5″)	30	34	32	36
150(6″)	40	47	42	49
200(8″)	60	71	64	75
250(10″)	88	107	93	112
300(12″)	122	141	132	151

Flange code JIS 10KFF,JIS 20KRF

JS Type Sleeve Expansion Joint

Welded

Sleeve expansion joint absorbing expansion/contraction of pipe in axial direction due to change of temperature.

Suitable for main pipeline in high buildings, area conditioning, plants, factories and hospitals. Also serve as countermeasure for ground sinkage and earthquake.



FEATURES

- Supper packing for high sealing performance.
- Safe structure.
- Large expansion/contraction.
- No need for lubrication.
- All stainless steel products are also suitable for water supply.

SPECIFICATIONS

Model name	JS-5HW	JS-6HW	JS-7HW	JS-8HW
Code name	**JS5HW-N**	**JS6HW-N**	**JS7HW-N**	**JS8HW-N**
Applicable fluid	Steam, air, gases, cold or hot water & oils			
Fluid temperature	Max. 220℃			
Applicable pressure	Max. 1.0MPa		Max. 2.0MPa	
End connection	Butt-weld			
Materials	Sleeve(Stainless steel), External sleeve(Carbon steel), Packing(Graphite compound)			
Pressure test	Hydraulic 1.5MPa		Hydraulic 3.0MPa	
Expansion amount	100mm	200mm	100mm	200mm
Expansion	20mm	40mm	20mm	40mm
Contraction	80mm	160mm	80mm	160mm

＊All stainless steel material is also available upon request.

DIMENSIONS

DIMENSIONS / Model Name / Size	L(mm) JS-5HW,7HW (Max. exp. 100mm)	L(mm) JS-6HW,8HW (Max. exp. 200mm)	D(mm)	Pressure receiving area of sleeve Ae(mm^2)	Friction resistance of sleeve μ(N)	Load on main fixing point (N) JS-5HW,6HW (at 1.0MPa)	Load on main fixing point (N) JS-7HW,8HW (at 2.0MPa)
20(¾″)	410	590	83	530	1300	1900	2400
25(1″)	410	590	90	860	1600	2500	3400
32(1¼″)	410	590	100	1320	2000	3400	4700
40(1½″)	410	590	105	1730	2300	4100	5800
50(2″)	410	590	120	2460	2700	5200	7700
65(2½″)	460	630	135	4300	3600	8000	13000
80(3″)	470	640	145	5810	4200	11000	16000
100(4″)	470	680	185	9850	5400	16000	26000
125(5″)	540	680	210	14700	6600	22000	37000
150(6″)	540	730	235	20600	7800	29000	49000
200(8″)	540	730	300	35600	10300	46000	82000
250(10″)	620	780	350	54700	12700	68000	123000
300(12″)	620	780	415	77900	15200	94000	172000

CONSTRUCTION

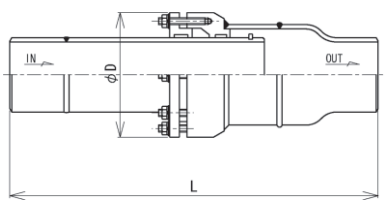

Depending on size, the structure may vary.

MASS

(kg)

Model Name / Size	JS-5HW	JS-6HW	JS-7HW	JS-8HW
20(¾″)	4.5	5	5	5.5
25(1″)	4.5	5	5	5.5
32(1¼″)	5	7	5.5	7.5
40(1½″)	5.5	7	6	7.5
50(2″)	9	11	9.5	11.5
65(2½″)	10	14	10.5	14.5
80(3″)	10.5	20.5	11.5	21.5
100(4″)	18.5	23.5	19.5	24.5
125(5″)	24.5	28.5	26.5	26
150(6″)	28	35	30	37
200(8″)	44	55	48	59
250(10″)	70	89	75	94
300(12″)	102	121	112	132

DATA/JS Type Sleeve Expansion Joint

■ ABOUT SUPER PACKING

Super packing is packing material made of flexible graphite and a certain type of inorganic substance in specific proportion. It has a high sealing performance and reliable service life.

In addition, it can resist −200~450℃ temperature and shows great corrosion resistance against acid, alkaline and organic solvents.

■ EXAMPLE OF APPLICATION

Fig.1 Absorption of thermal expansion

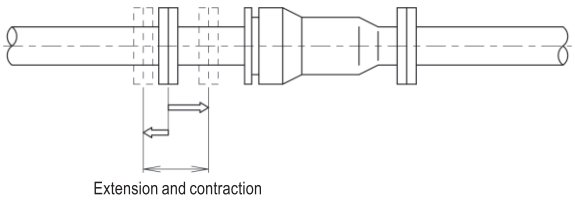

Fig.2 Ground sinkage prevention

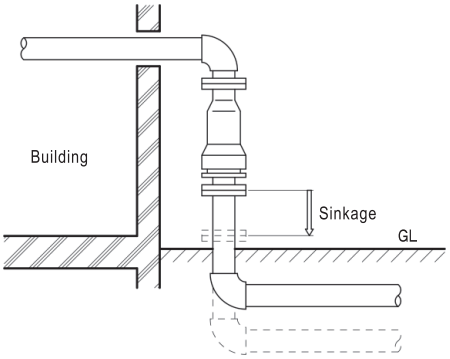

Fig.3 Earthquake-proof building and ground sinkage prevention

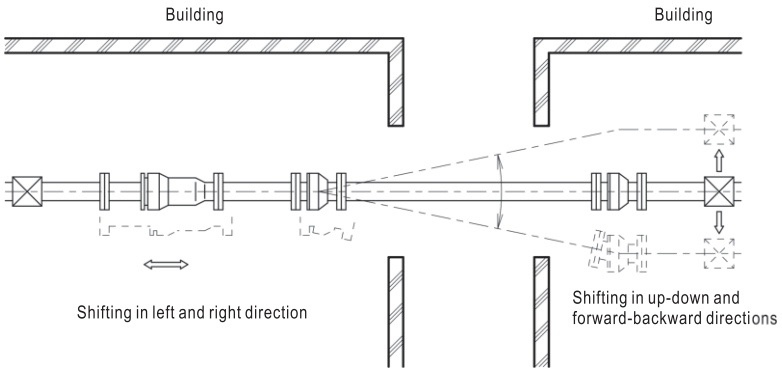

■ CALCULATING EXPANSION/CONTRACTION OF PIPE

$\Delta \ell = \beta \times \Delta t \times \ell$

$\Delta \ell$: Expansion/contraction of pipe		(mm)
β: Linear expansion coefficient of pipe		
	12.2×10^{-3}mm/m/℃	(steel pipe)
Δt: Temperature difference		(℃)
ℓ: Length of pipe		(m)

Note: The extension/compression of 1m pipe can also be calculated using Fig.1 in Page 179.

■ FIXING POINT INSTALLATION

Fixing point with sufficient strength are necessary for installing expansion joint. The position of fixing point is the following.

① Main fixing point

- The end of straight pipe closed by a flange or valve.
- Bending pipe where the direction of flow changes;
- Between two expansion joints, where reducer is used to change the diameter of pipe;
- Pipe between two expansion joints, where valve is installed;
- The inlet of main pipe of branch pipe with free expansion joint.

② Intermediate fixing point

In the middle of two expansion joints between main fixing point.

■ LOAD ON FIXING POINT

Load on main fixing point of straight pipe Fm (N)

$Fm = Ae \times P + \mu$

Load on intermediate fixing point Fi (N)

$Fi = \mu$

Ae: Pressure receiving area of sleeve	(mm^2)
P: Pressure of fluid	(MPa)
μ: Friction resistance of sleeve	(N)

DATA/JS Type Sleeve Expansion Joint

■ GUIDE AND PIPE SUPPORT

① Guide

To ensure correct expansion and contraction of expansion joint, the axes of expansion joint and pipe must match with each other. In addition, it is necessary to use guides to transmit the force for the movement in axial direction to fixing point. The guides need to be installed according to the following intervals.

The deviation of pipe axes is ±2mm for size 125mm or smaller pipes, and ±3mm for size 150mm or larger pipes. The deviation of degree of parallelization of pipe should be ±0.5°.

L_1: The interval between expansion joint and No.1 guide.

L_2: The interval between No.1 guide and No.2 guide.

L_3: The interval between No.2 guide and middle guide.

Fig. 4-2 Vertical piping and roof piping

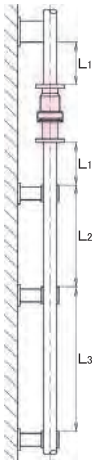

[Vertical piping]
The weight of piping applies on main fixing point on the two sides of expansion joint.

[Roof piping]

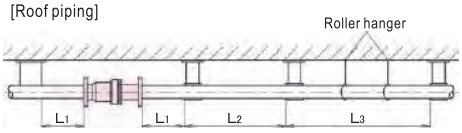

Note: The pipe may buckle if only roller hanger is used. In this case, guides are necessary.

The max. interval of guides can be calculated using the following formula. The max. interval of intermediate guide (L_3) can be determined using Fig.5. (For STPG Sch40 carbon steel)

$L_1 \leqq 4D$

$L_2 \leqq 14D$

$$L_3 \leqq \sqrt{\frac{\pi^2 EI}{fFm}} \qquad I = \frac{\pi}{64}(D^4 - d^4)$$

L_1, L_2, L_3: Interval between guides (max.)	(mm)
D: External diameter of pipe	(mm)
d: Internal diameter of pipe	(mm)
E: Young's modulus at the designed temperature of pipe material	(N/mm^2)
Steel pipe 200℃:	$191 \times 10^3 N/mm^2$
Stainless steel pipe 200℃:	$183 \times 10^3 N/mm^2$
I: Secondary moment of the cross section of pipe	(mm^4)
f: Safety factor	(3 or larger)
Fm: Load on main fixing point	(N)

② Pipe supporting

Install roller support or roller hanger guide to prevent pipe from bending due the weight of pipe or fluid.

Fig.5 Max. interval between intermediate guides

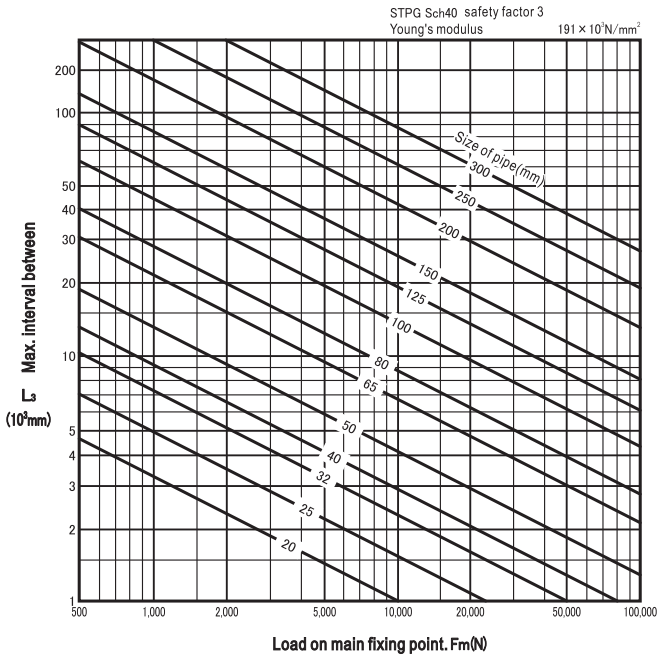

Fig.4-1 Interval between guides

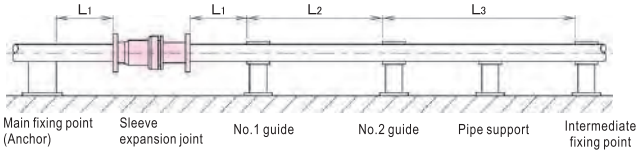

Fig.6 Fixing point and guide (example)

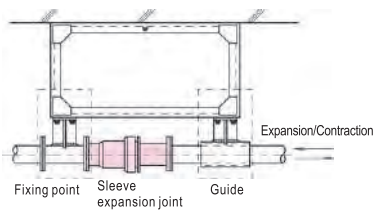

Other guide (example)

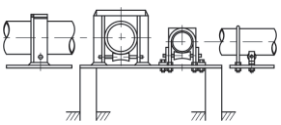

JU-1 Type Ball Joint

Screwed

Complicated displacement of pipeline occurs due to expansion, contraction, shifting of axes, bending, twisting caused by change of temperature, ground sinkage, earthquake, and other factors. Ball joint can absorb such displacement. It is solid, durable, and can simplify piping works.

SPECIFICATIONS

Model name	JU-1
Code name	**JU1-M**
Applicable fluid	Steam, air, gases, cold or hot water & oils
Fluid temperature	Max. 220℃
Applicable pressure	Max. 1.0MPa
Max. displacement angle	30°
Rotation angle	360°
End connection	Screwed JIS Rc
Materials	Body(Ductile cast iron), Ball(Ductile cast iron chrome plated), Packing(Teflon)
Pressure test	Hydraulic 1.5MPa

DIMENSIONS

(mm)

Size	L	ℓ	A	d	Mass(kg)	Torque(N · m)
20(¾″)	150	90	118	¾″	3.3	100
25(1″)	150	90	118	1″	3.3	100
32(1¼″)	160	100	134	1¼″	4.6	130
40(1½″)	170	105	148	1½″	6.3	150
50(2″)	185	115	170	2″	8.5	220

CONSTRUCTION

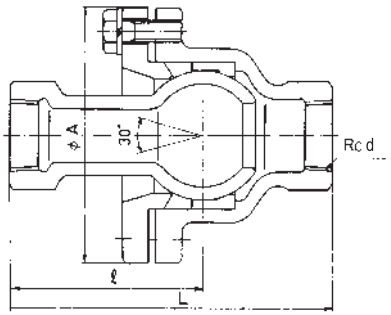



JU Type Ball Joint

Flanged・Welded

for Building・Air-conditioning Equipments, Factory Equipments, and Earthquake-proof Buildings, etc.

Solutions for Preventing Expansion and Contraction of Pipelines, Earthquake-proof, and Ground Sinkage

Absorb expansion and contraction in axial direction of pipeline, shifting of axes, bending, twisting, and other displacement of pipeline due to ground sinkage or earthquake. Ideal for high buildings, area conditioning, plants, storage tanks and factories.



JU-3F, 4F Type



JU-3W, 4W Type

FEATURES

- Super packing allows high sealing performance.
- Large displacement in limited space.
- Low load on fixing point, allows utilization of small fixing point.
- Absorb thermal expansion of pipeline and the movement of pipeline due to ground sinkage.

SPECIFICATIONS

Model name	JU-3F	JU-3W	JU-4F	JU-4W
Code name	JU3F-N	JU3W-N	JU4F-N	JU4W-N
Applicable fluid	Steam, air, gases, cold or hot water & oils			
Fluid temperature	Max. 220℃			
Applicable pressure	Max. 1.0MPa		Max. 2.0MPa	
End connection	Flanged JIS 10KFF	Butt-weld	Flanged JIS 20KRF	Butt-weld
Materials	Ball(Stainless steel), End pipe(Carbon steel), Packing(Graphite compound)			
	Flange(Mild steel)	—	Flange(Carbon steel)	—
Pressure test	Hydraulic 1.5MPa		Hydraulic 3.0MPa	

＊All stainless material are also available upon request.

DIMENSIONS

DIMENSIONS / Models / Size	L(mm) JU-3F JU-4F	L(mm) JU-3W JU-4W	A(mm)	Max. displacement angle(θ)	Mass (kg) JU-3F JU-4F	Mass (kg) JU-3W JU-4W	Torque(N・m) JU-3F JU-3W	Torque(N・m) JU-4F JU-4W
50(2″)	220	210	125	20	9(9.5)	5.5	200	200
65(2½″)	240	230	145	20	12(12.5)	7.5	300	300
80(3″)	270	260	160	20	16.5	11.5	400	500
100(4″)	295	280	195	20	23.5	17.5	700	800
125(5″)	315	300	220	15	33.5	23.5	900	1100
150(6″)	325	310	255	15	71	59	1300	1600
200(8″)	375	360	335	15	86	70	2400	3100
250(10″)	390	430	395	15	130	110	4000	5200
300(12″)	430	480	465	15	163	142	6000	8200

＊Figures in ( ) are for JU-4F Type.

＊Flange type: Flange code JIS 10KFF, JIS 20KRF

CONSTRUCTION

JU-3F, 4F Type

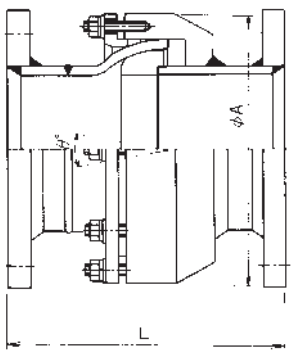

JU-3W, 4W Type

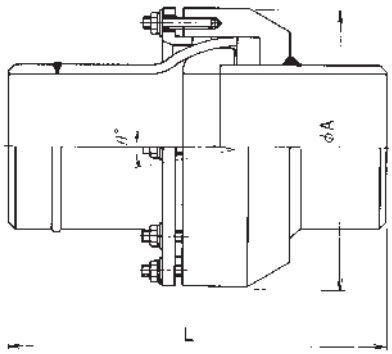

DATA/JU Type Ball Joint

CALCULATING EXTENSION / CONTRACTION OF PIPELINE

$\delta = \beta \times \Delta t \times L$

δ: Expansion and contraction of pipe (mm)
β: Linear expansion coefficient of pipe
12.2×10^{-3}mm/m/℃ (steel pipe)
Δt: Temperature difference (℃)
L: Length of pipe (m)

The expansion/contraction of 1m pipe can be calculated using Fig.1 in Page 179.

In the case of earthquake-proof buildings and solutions for preventing ground sinkage and absorption of displacement between buildings, the expansion/contraction should be added with displacement.

POSITIONS FOR INSTALLING BALL JOINT

Generally, ball joint can be installed at any position, provided it can absorb the expansion or contraction of pipe. However, in the case of absorption of displacement in axial direction, installing ball joint at the bending part or ascending/descending part of pipe can help saving space.

INSTALLING 2 BALL JOINTS
(Determining interval between ball joints)

The interval between ball joints can be calculated using the following formula, where the interval is ℓ, expansion/contraction of pipe is δ, the displacement angle is θ, and safety factor is 1.5.

Fig.1

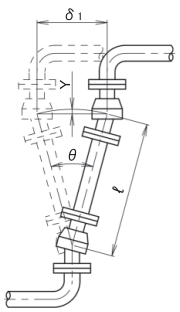

$$\ell \geqq \frac{\frac{\delta_1}{2}\times 1.5}{\sin\frac{\theta}{2}}$$

Fig.2

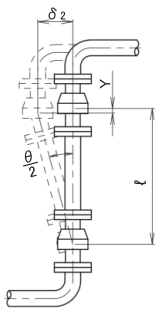

$$\ell \geqq \frac{\delta_2\times 1.5}{\sin\frac{\theta}{2}}$$

CALCULATING DEFLECTION OF PIPE

When two ball joints are used, deflection may occur when pipe expands. The deflection can be calculated using the following formula.

In Fig.1,

$$Y=\ell-\sqrt{\ell^2-\left(\frac{\delta_1}{2}\right)^2}$$

In Fig.2,

$$Y=\ell-\sqrt{\ell^2-\delta_2^{\,2}}$$

ℓ : Interval between ball joints (mm)
δ_1 : Expansion/Contraction of pipe (in the case of Fig.1) (mm)
δ_2 : Expansion/Contraction of pipe (in the case of Fig.2) (mm)
Y : Deflection of pipe (mm)
θ : Displacement angle of ball joint

The results of calculations are shown in Tab.1.

TABLE1. DEFLECTION OF PIPE "Y"

(mm)

Expansion of piping δ_1		40	60	80	100	150	200	300	400
Expansion of piping δ_2		20	30	40	50	75	100	150	200
The distance "ℓ" between ball joints	800	0.25	0.56	1.0	1.6	3.5	6.3	14.2	25.4
	1000	0.20	0.45	0.8	1.3	2.8	5.0	11.3	20.2
	1500	0.13	0.30	0.53	0.83	1.9	3.3	7.5	13.4
	2000	0.10	0.23	0.40	0.63	1.4	2.5	5.6	10.0
	2500	0.08	0.18	0.32	0.50	1.2	2.0	4.5	8.0
	3000	0.07	0.15	0.27	0.42	0.94	1.7	3.8	6.7
	4000	0.05	0.12	0.20	0.32	0.70	1.3	2.8	5.0
	5000	0.04	0.09	0.16	0.25	0.56	1.0	2.3	4.0

Deflection of pipe causes bending moment on pipe. Therefore, the distance to the first guide should be longer than the distance calculated using the following formula.

$$X=f\sqrt{\frac{3EYD}{2\sigma}}$$

X: Min. distance to the first guide (mm)
f: Safety factor (≧2)
E: Young's modulus (N/mm^2)
Y: Deflection of pipe (mm)
D: External diameter of pipe (mm)
σ: Allowable stress of pipe (N/mm^2)

In the case of steel pipes, the minimum distance "X" to the first guide is shown in TABLE 2. taking safety factor "f"=2
$E=191\times10^3 N/mm^2$,
"σ"=70N/mm^2
※: 200℃

TABLE2. MINIMUM DISTANCE "X" TO THE FIRST GUIDE

(mm)

Y / Size	Deflection "Y" of pipe 1	2	4	6	8	10	12	14
25(1″)	800	1100	1600	1900	2200	2400	2700	2900
32(1¼″)	900	1200	1700	2100	2400	2700	3000	3200
40(1½″)	1000	1300	1900	2300	2600	2900	3200	3400
50(2″)	1100	1500	2000	2500	2900	3200	3500	3800
65(2½″)	1200	1700	2300	2800	3300	3600	4000	4300
80(3″)	1300	1800	2500	3000	3500	3900	4300	4600
100(4″)	1400	2000	2800	3400	4000	4400	4800	5200
125(5″)	1600	2100	3100	3800	4400	4900	5400	5800
150(6″)	1700	2400	3400	4100	4800	5300	5800	6300
200(8″)	2000	2700	3900	4700	5400	6100	6700	7200
250(10″)	2200	3000	4300	5200	6000	6800	7400	8000
300(12″)	2400	3300	4700	5700	6600	7400	8100	8700

* In case of using 3 ball joints, there will be no deflection. So, the first guide should be installed at the nearest point of the ball joint.

THE DISTANCE "ℓ" BETWEEN BALL JOINTS

Max. Displacement angle of joint	Fig.1	Fig.2
θ=30° (JU-1 Type)	$\ell \geqq 3\delta_1$	$\ell \geqq 6\delta_2$
θ=20° (JU-3~4 Type Size 100mm and below)	$\ell \geqq 4.5\delta_1$	$\ell \geqq 9\delta_2$
θ=15° (JU-3~4 Type Size 125mm above)	$\ell \geqq 6\delta_1$	$\ell \geqq 12\delta_2$

DATA/JU Type Ball Joint

■ USING 3 BALL JOINTS

① One-way expansion

By using a combination of 3 ball joints, it is able to absorb deflection and bending stress that occur in the case of using 2 ball joints.

The interval (ℓ) can be calculated using the same formulas as those utilized in the case of using 2 ball joints.

② Two-way expansion

Using 3 ball joints can also absorb expansion of pipe in two directions. The interval (ℓ) can be calculated using the longer one of δ_1 and δ_2 and $\ell_1=\ell_2$. The total of θ_1 and θ_2 should not exceed allowable displacement angle($\frac{\theta}{2}$).

Fig.3

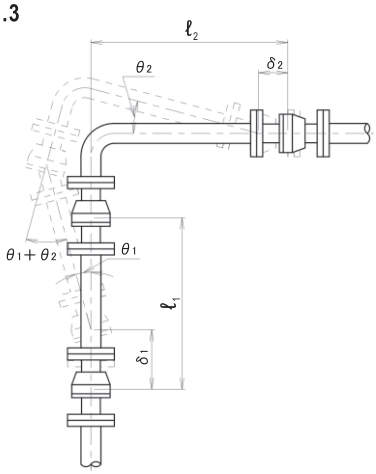

■ INSTALLING FIXING AND THE FIRST GUIDE

ⓐ Fixing point should be installed at the two ends and points that equally divide the extension of pipe.

ⓑ The first guide should be installed at a position as near as possible to ball joint. In the case 2 ball joints are used, see Tab.2 in Page 188.

ⓒ The load of fixing point and the first guide can be calculated using the following formulas. Fixing point and the guide must be strong enough to bear this load.

$$F_1=\frac{2T}{\ell}\times 1000$$

$$F_2=\frac{3EIY}{X^3}$$

$$F_T=\sqrt{F_1^2+F_2^2}$$

$$F_Z=\sqrt{F_A^2+F_B^2-2F_AF_B\cos\alpha}$$

$$F_Z=\sqrt{F_A^2+F_B^2}\quad(\alpha=90°)$$

F_1: The load of the first guide when fixing points and 3 ball joints are used (N)
See Tab.3 in Page 191.

F_2: The load of the first guide when fixing points and 2 ball joints are used (N)
See Tab.4 in Page 191.

F_T, F_Z: Combined load of fixing points (N)

F_A: Axial load of pipe A (N)
See Fig.8.

F_B: Axial load of pipe B (N)
See Fig.8.

α : Angle between pipe A and B (°)
ℓ : Interval between ball joints (mm)
T : Torque of ball joint (N • m)
See dimension table in Page 186, 187.
I : Inertia moment (mm^4)

$$I=\frac{\pi}{64}(D^4-d^4)$$

D : External diameter of pipe
d : Internal diameter of pipe
E : Young's modulus
Steel pipe (200℃): $191\times10^3 N/mm^2$
X : Distance to the first guide (mm)
Y : Deflection of pipe (mm)

■ PIPING EXAMPLE

Fig.4

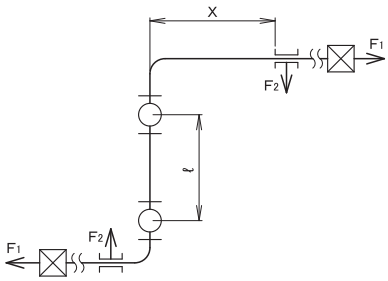

Fig.5

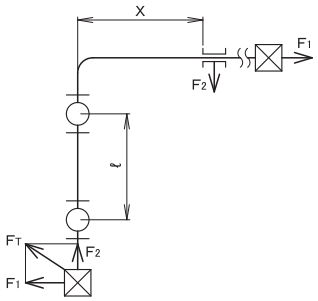

Fig.6

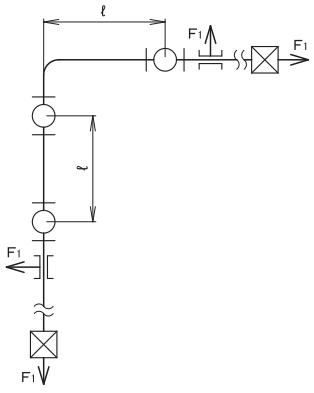

Fig.7

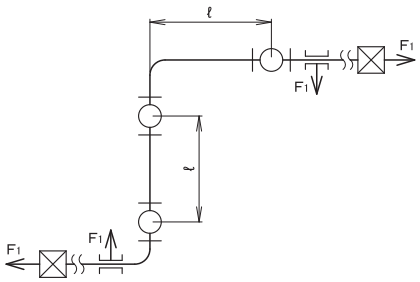

Fig.8

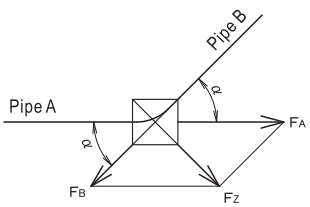

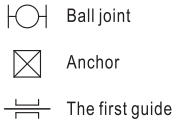

DATA/JU Type Ball Joint

■ PIPING EXAMPLE

● Horizontal piping

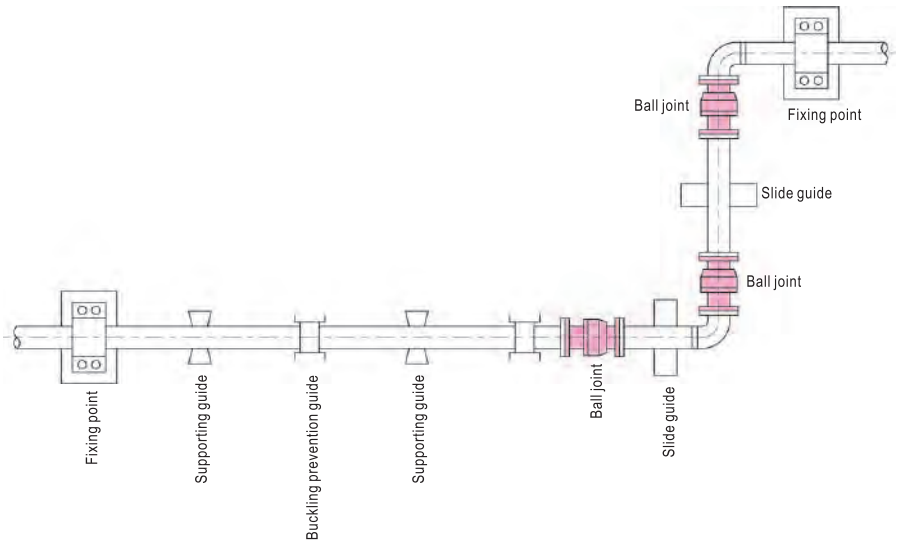

■ GUIDE

ⓐ Buckling prevention guide

To allow correct expansion of pipe, it is necessary to install guides for supporting pipe and preventing buckling. The interval between buckling prevention can be calculated using the following formula.

$$L=\sqrt{\frac{\pi^2 EI}{fF}}$$

L: Interval between guides	(mm)
F: Axial load of pipe	(N)
E: Young's modulus	(N/mm^2)
I: Secondary moment of cross section of pipe	(mm^4)
f: Safety factor	(≥3)

ⓑ Pipe supporting

Pipe may bend due to its weight and the weight of fluid. To prevent pipe from bending, it is necessary to install roller, hanger and other guides. In addition, since the pipe between ball joints move in horizontal direction, it is also necessary to install slide joint on this section of pipe.

● An example of buckling prevention guide

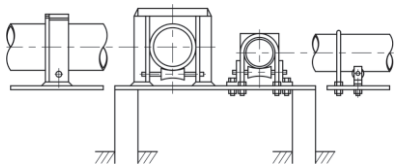

● Vertical piping

Make sure the ball joint in the middle does not deflect from the direction of sliding and clamp the pipe from both sides. Install slide guide on vertical pipe (as shown in the figure) or horizontal pipe.

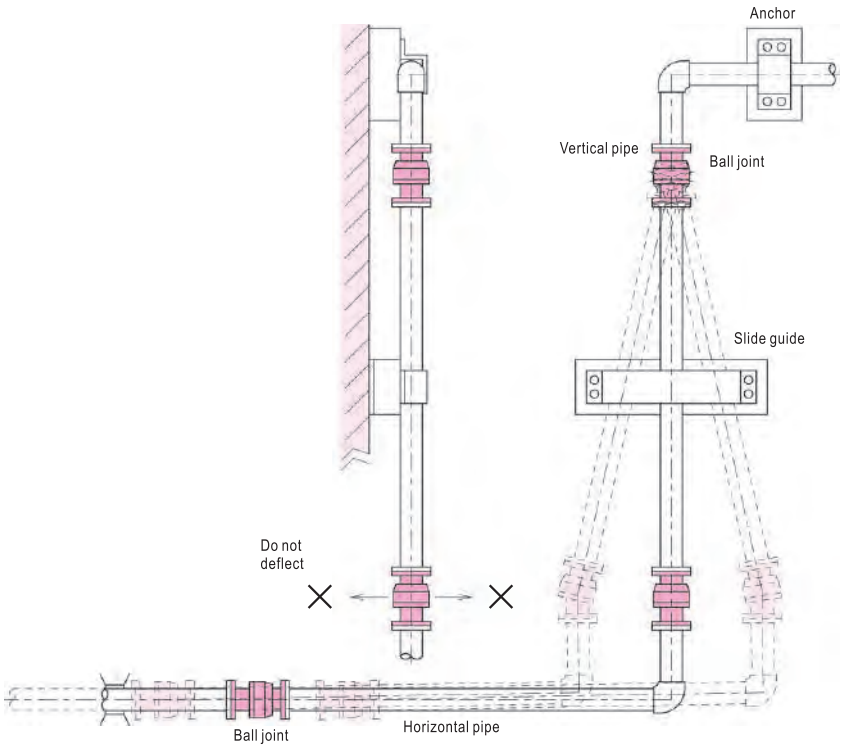

DATA/JU Type Ball Joint

■ USING BALL JOINT IN EARTHQUAKE-PROOF BUILDING

Example (using 3 ball joints)

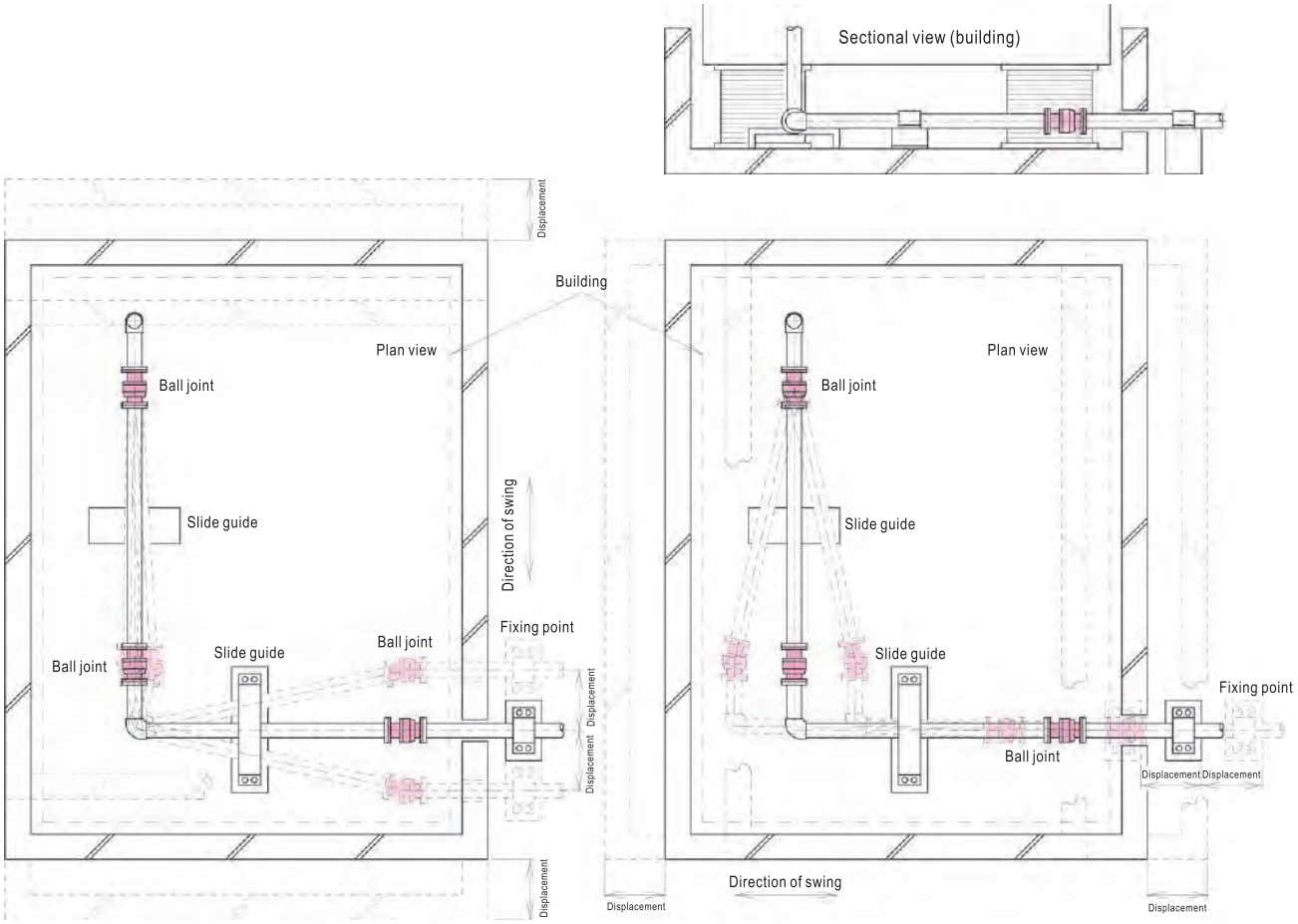

■ TABLE 3. F_1 at pressure 1.0MPa

(N)

Size	Distance between ball joints ℓ (mm)					
	1000	1500	2000	2500	3000	4000
50(2″)	400	270				
65(2½″)	600	400				
80(3″)	800	540	400			
100(4″)	1400	940	700			
125(5″)		1200	900	720		
150(6″)		1740	1300	1040		
200(8″)		3200	2400	1920	1600	
250(10″)			4000	3200	2670	2000
300(12″)			6000	4800	4000	3000

∗ This table is for JU-3F & JU-3W Types.

■ TABLE 4. F_2 at deflection Y=1mm

(N)

Size	Distance to first guide X (mm)						
	1000	2000	3000	4000	5000	6000	7000
50(2″)	170	21	6.1	2.6			
65(2½″)	430	54	16	6.8			
80(3″)	740	93	28	12			
100(4″)		220	65	28	14		
125(5″)		450	140	56	29		
150(6″)		810	240	110	52	30	
200(8″)			630	270	140	79	50
250(10″)			1360	580	300	170	110
300(12″)			2560	1080	560	320	210

(STPG Sch40)

∗ 1. Required load can be figured out by multiplying the actual distance mm with the above figures.
∗ 2. This table is for JU-3F, 4F & JU-3W, 4W Types.

MEMO

STRAINERS 11

Y TYPE

Model name	End connection	Size	Applicable pressure(MPa)	Body materials	Page
KY-4	Screwed	15~65(½″~2½″)	Max. 1.0	Cast iron	194
KY-4N		15~50(½″~2″)		Cast bronze	
KY-7	Screwed	15~50(½″~2″)	Max. 1.0	Stainless steel	195
KY-6	Flanged	15~250(½″~10″)	Max. 1.0	Cast iron	196
KY-6CN		15~150(½″~6″)			
KY-8	Flanged	15~150(½″~6″)	Max. 1.0	Stainless steel	197
KY-3	Flanged	15~250(½″~10″)	Max. 3.0	Cast steel	198
KY-9	Flanged	150~400(6″~16″)	Max. 1.0	Carbon steel	199
KY-10				Stainless steel	

STRAIGHT TYPE

Model name	End connection	Size	Applicable pressure(MPa)	Body materials	Page
KT-1	Flanged	50~300(2″~12″)	Max. 1.0	Cast iron	200
			Max. 1.0	Ductile cast iron	
KT-1A	Flanged	50~100(2″~4″)	Max. 1.0	Cast iron	
		125(5″)	Max. 0.75		
		150(6″)	Max. 0.5		
KT-1D	Flanged	250~300(10″~12″)	Max. 1.0		
KT-1PN,1CN	Flanged	50~300(2″~12″)	Max. 1.0	Cast iron	201
KT-2,2D	Flanged	350~500(14″~20″)	Max. 1.0	Carbon steel	202
KT-3	Flanged	50~300(2″~12″)	Max. 1.0	Stainless steel	203
KT-3A	Flanged	50~100(2″~4″)	Max. 1.0		
		125(5″)	Max. 0.75		
		150(6″)	Max. 0.5		
KT-4H,4W	Flanged	50~300(2″~12″)	Max. 2.0	Ductile cast iron	204
KT-5,5W	Screwed	15~50(½″~2″)	Max. 2.0	Stainless steel	205
KT-5F,5FW	Flanged		Max. 1.0		

U TYPE

Model name	End connection	Size	Applicable pressure(MPa)	Body materials	Page
KU-1	Flanged	25~250(1″~10″)	Max. 1.0	Cast iron	207
KU-1CN		25~125(1″~5″)			
KU-2	Flanged	15~100(½″~4″)	Max. 1.0	Stainless steel	208
KU-2A		15~80(½″~3″)			
KU-3	Flanged	125~400(5″~16″)	Max. 1.0	Carbon steel	209
KU-4		125~350(5″~14″)		Stainless steel	

W TYPE

Model name	End connection	Size	Applicable pressure(MPa)	Body materials	Page
KW-1	Flanged	20~65(¾″~2½″)	Max. 1.0	Cast iron	210
KW-2	Flanged	15~100(½″~4″)	Max. 0.7	Cast iron	211

[Reference: Mesh for strainer]

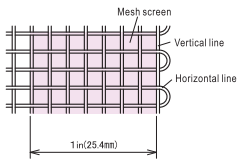

40-mesh
(mesh screen: 0.44mm)

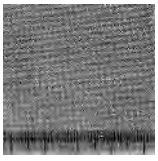

60-mesh
(mesh screen: 0.27mm)

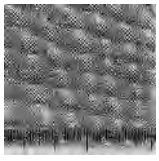

80-mesh
(mesh screen: 0.19mm)

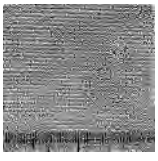

100-mesh
(mesh screen: 0.15mm)

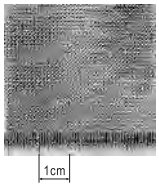

What is mesh?

Mesh is the unit to describe the mesh screen count used in the strainer net. It shows the number of mesh screen in 1 inch (25.4mm) distance in the net.

- The larger the mesh number, the narrower the mesh screen.

Reference

Φ1.3×P2.5 punch hole (punch plate):equivalent to 11-mesh
Φ2.5×P4 punch hole (punch plate):equivalent to 7-mesh

KY-4, 4N Type Strainer

Cast iron・cast bronze, screwed

Y-shaped, screwed strainer made of cast iron or bronze, with compact body, large filtering area, is ideal to use in the pipeline where automatic valves are installed.

SPECIFICATIONS

Body material	Cast iron		Cast bronze	
Model name	KY-4		KY-4N	
Code name	KY4-G2	KY4-G☐	KY4N-J2	KY4N-J☐
	※ 1, 3 or 4 for mesh is required in ☐.			
Size	15~65(½″~2½″)		15~50(½″~2″)	
Applicable fluid	Steam, gases & liquids			
Applicable pressure	Max. 1.0MPa			
Applicable temperature	Max. 184℃*1.		Max. 220℃	
End connection	Screwed JIS Rc			
Materials	Body(Cast iron), Net(Stainless steel) Cover(Forged brass or cast iron)		Body, Cover(Cast bronze) Net(Stainless steel)	
Mesh*2.	60 Mesh	※ 1:40 Mesh 3:80 Mesh 4:100 Mesh	60 Mesh	※ 1:40 Mesh 3:80 Mesh 4:100 Mesh
Allowed pressure differential	Max.0.1MPa*3.			
Pressure test	Hydraulic 1.5MPa		Hydraulic 1.75MPa	

＊1. Applicable temperature Max. 220℃ is available upon your request.
＊2. Punched plate without lining is available.(Size 15~40mm: Φ1.3×P2.5, size 50mm and 65mm: Φ2.5×P4)
＊3. The net may be damaged if pressure differential exceeds 0.1 MPa. Clean the net to make sure pressure differential is less than 0.1 MPa.

DIMENSIONS

(mm)

Size	L	H	d	Mass(kg)
15(½″)	75	55(53)	½″	0.6(0.4)
20(¾″)	90	67(64)	¾″	0.9(0.6)
25(1″)	110	78(77)	1″	1.4(1)
32(1¼″)	135	97(95)	1¼″	2.3(1.7)
40(1½″)	150	112(109)	1½″	3.5(2.5)
50(2″)	170	125(123)	2″	4.7(3.7)
65(2½″)	200	145	2½″	7.3

Figures in ( ) are for KY-4N Type.



KY-4 Type

CONSTRUCTION (KY-4 Type)

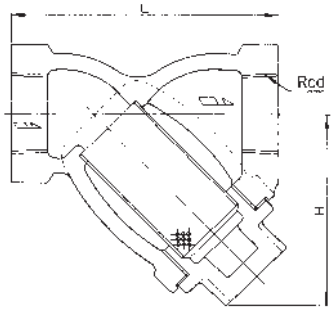

The structure of KY-4N Type is slightly different.

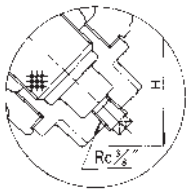

Size 50mm & 65mm

PRESSURE LOSS CHART (60-mesh)

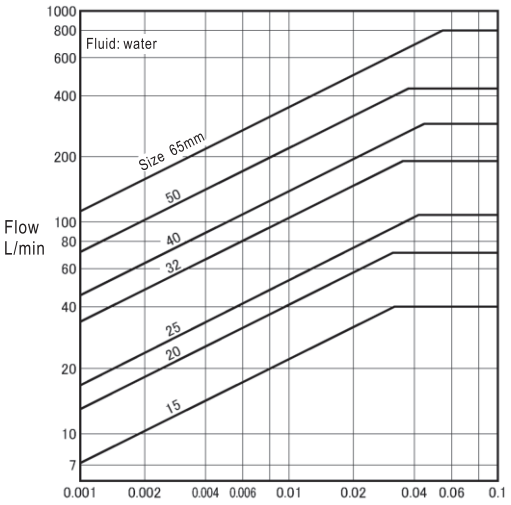

Note: The pressure loss for each mesh number can be calculated by multiplying pressure loss determined using the above chart and a multiplier listed below.

MULTIPLIER LIST

Mesh	Multiplier
40	0.95
80	1.05
100	1.1

＊Refer to Page 193 for mesh data.

KY-7 Type Strainer

Stainless steel, screwed

Y-shaped, screwed type strainer made of stainless steel, especially suitable for general constructions or industries.

SPECIFICATIONS

Model name	KY-7	
Code name	KY7-D2	KY7-D
Applicable fluid	Steam, Gases & liquids	
Fluid temperature	Max. 220℃	
Applicable pressure	Max. 1.0MPa	
End connection	Screwed JIS Rc	
Materials	Body, Net(Stainless steel)	
Mesh	60 Mesh	40, 80 or 100 Mesh
Allowed pressure differential	Max.0.1MPa*	
Pressure test	Hydraulic 1.5MPa	

* The net may be damaged if pressure differential exceeds 0.1 MPa. Clean the net to make sure pressure differential is less than 0.1 MPa.

DIMENSIONS

(mm)

Size	d	L	H	Mass(kg)
15(½″)	½″	78	50.5	0.35
20(¾″)	¾″	93	60.5	0.5
25(1″)	1″	108	71	0.85
32(1¼″)	1¼″	128	82	1.1
40(1½″)	1½″	143	93	1.5
50(2″)	2″	173	119	2.6

PRESSURE LOSS CHART (40-mesh)

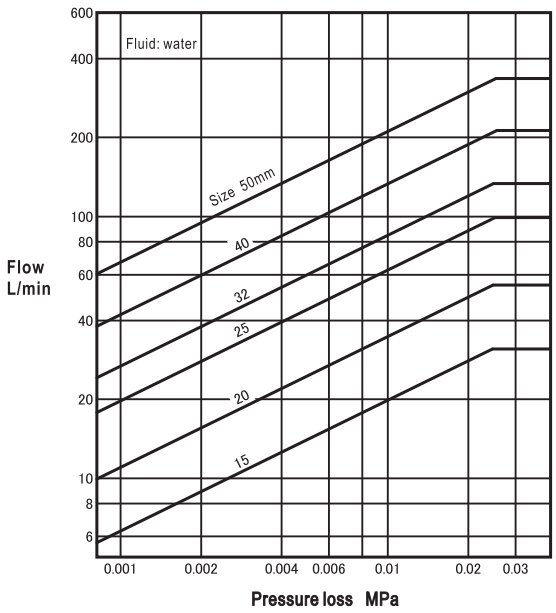

Note: The pressure loss for each mesh number can be calculated by multiplying pressure loss determined using the above chart and a multiplier listed below.

MULTIPLIER LIST

Mesh	Multiplier
60	1.04
80	1.07
100	1.11

* Refer to Page 193 for mesh data.



CONSTRUCTION

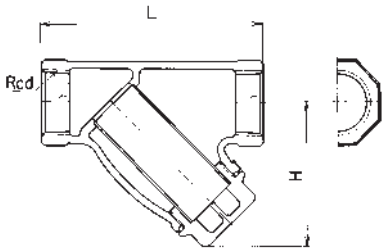

KY-6, 6CN Type Strainer

Cast iron, flanged

Y-shaped, flanged strainer made of cast iron, with compact body, large filtering area, is ideal to use in the pipeline where automatic valves are installed. KY-6CN Type has nylon coating for rust prevention.



KY-6 Type



KY-6CN Type

SPECIFICATIONS

Type	Standard		Nylon coating	
Model name	KY-6		KY-6CN	
Code name	KY6-G2	KY6-G □*1.	KY6CN-G2	KY6CN-G
	※ 1, 3 or 4 for mesh is required in □.			
Size	15~250(½″~10″)		15~150(½″~6″)	
Applicable fluid	Steam, gases & liquids		Water, hot water & gases	
Fluid temperature	Max. 184℃*2.		5~60℃	
Applicable pressure	Max. 1.0MPa			
End connection	Flanged JIS 10KRF			
Materials	Body(Cast iron), Net(Stainless steel) Cover(Size 15~40mm:brass, Size 50~250mm:Cast iron)		Body(Cast iron), Net(Stainless steel) Cover(Size 15~40mm:Cast bonze, Size 50·65mm:Brass, Size 80~150mm:Cast iron)	
Painting or coating for body	Interior:Rust proof oil		Body and cover:Nylon 11 coating inside and outside value	
Mesh*3.	60 Mesh	※ 1:40 Mesh 3:80 Mesh 4:100 Mesh	60 Mesh	※ 1:40 Mesh 3:80 Mesh 4:100 Mesh
Allowed pressure differential	Max.0.1MPa*4.			
Pressure test	Hydraulic 1.5MPa		Hydraulic 1.75MPa	

* 1. Size 100mm and bigger, code name is KY6-G.
* 2. Applicable temperature Max. 220℃ is available upon your request.
* 3. Punched plate without lining is available upon your request. (Size 15~40mm: Φ1.3×P2.5, size 50~250mm: Φ2.5×P4)
* 4. The net may be damaged if pressure differential exceeds 0.1 MPa. Clean the net to make sure pressure differential is less than 0.1 MPa.

DIMENSIONS

(mm)

Size	15(½″)	20(¾″)	25(1″)	32(1¼″)	40(1½″)	50(2″)	65(2½″)	80(3″)	100(4″)	125(5″)	150(6″)	200(8″)	250(10″)
L	125	140	160	180	190	220	270	315	370	450	510	620	760
H	55	67	78	97	112	125	155	200	245	300	340	450	510
Mass(kg)	2	3	4	5.5	6.5	9	13	20	32	55	75	130	220

Flange code JIS 10KRF

PRESSURE LOSS CHART (60-mesh)

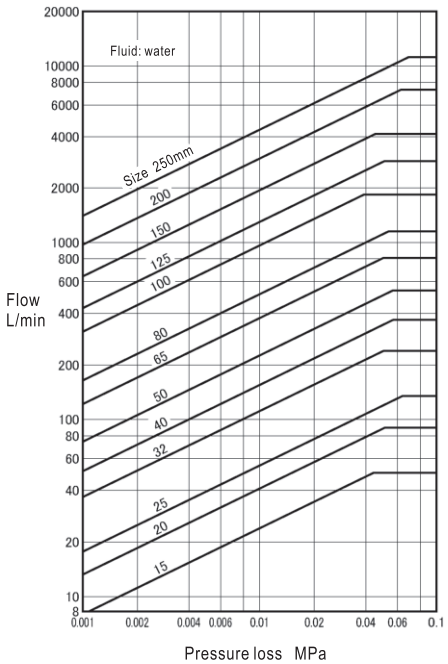

Note: The pressure loss for each mesh number can be calculated by multiplying pressure loss determined using the above chart and a multiplier listed.

MULTIPLIER LIST

Mesh	Multiplier
40	0.95
80	1.05
100	1.1

* Refer to Page 193 for mesh data.

CONSTRUCTION

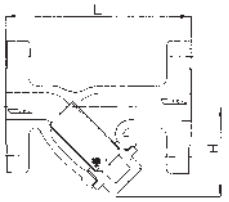

Size 15~40mm

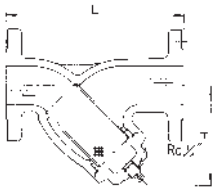

Size 50mm & 65mm

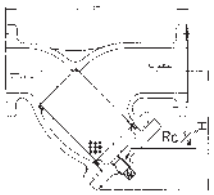

Size 80~250mm

CAUTIONS ON INSTALLATION AND HANDLING

Apply thermal insulation on KY-6CN Type if the temperature difference between the product and the ambient environment is larger than 40℃.

KY-8 Type Strainer

Stainless steel, flanged

Y-shaped, flanged strainer made of stainless steel, suitable for general construction or industries.

SPECIFICATIONS

Model name	KY-8	
Code name	KY8-D2	KY8-D
Applicable fluid	Steam, gases & liquids	
Fluid temperature	Max. 200℃	
Applicable pressure	Max. 1.0MPa	
End connection	Flanged JIS 10KFF	
Materials	Body, Cover, Net(Stainless steel)	
Mesh	60 Mesh	40, 80 or 100 Mesh
Allowed pressure differential	Max.0.1MPa*	
Pressure test	Hydraulic 1.5MPa	

* The net may be damaged if pressure differential exceeds 0.1 MPa. Clean the net to make sure pressure differential is less than 0.1 MPa.

DIMENSIONS

(mm)

Size	15(½″)	20(¾″)	25(1″)	32(1¼″)	40(1½″)	50(2″)	65(2½″)	80(3″)	100(4″)	125(5″)	150(6″)
L	120	130	150	170	190	220	270	290	350	390	440
H	57	65	76	92	105	122	162	195	228	260	310
Mass(kg)	2	2.5	3.5	5	5.5	7.5	13	16	24	37	50

Flange code JIS 10KFF

PRESSURE LOSS CHART (40-mesh)

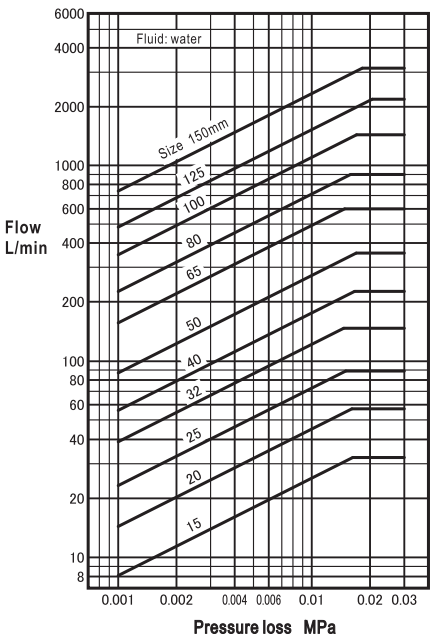

Note: The pressure loss for 60~100-mesh can be calculated by multiplying pressure loss determined using the chart and a multiplier listed below.

MULTIPLIER LIST

Mesh	Multiplier
60	1.04
80	1.07
100	1.11

* Refer to Page 193 for mesh data.



CONSTRUCTION

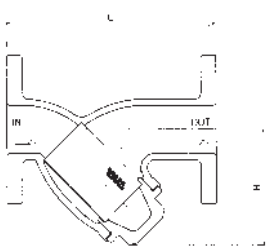

Size 15~50mm

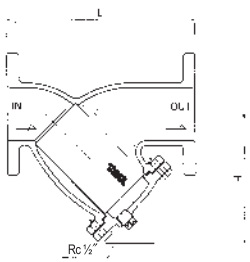

Size 65~150mm

KY-3 Type Strainer

Cast steel, flanged

Y-shaped, high pressure strainer made of cast steel, with 10, 16, 20, 30K flanges, compact body, large filtering area, is ideal to use in for pipelines where automatic valves are installed.



CONSTRUCTION

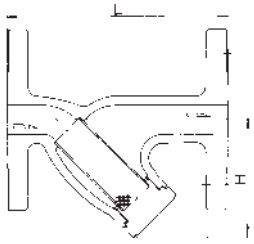

Size 15mm & 20mm

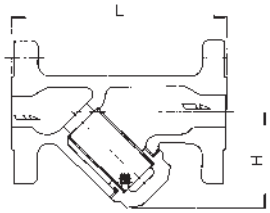

Size 25~40mm

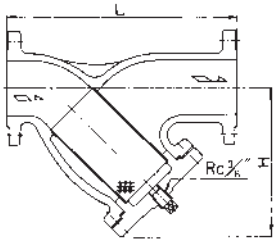

Size 50~80mm

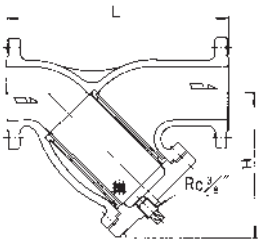

Size 100~250mm

SPECIFICATIONS

Model name	KY-3
Code name	**KY3-C**
Applicable fluid	Steam, gases & liquids
Applicable pressure	Max. 1.0, 1.6, 2.0 & 3.0MPa
Fluid temperature	Max. 300℃
End connection	Flanged JIS 10, 16, 20 & 30KRF
Materials	Body(Cast steel), Net(Stainless steel), Cover(Carbon steel or Cast steel)
Mesh*1.	**40, 60, 80 or 100 Mesh**
Allowed pressure differential	Max.0.1MPa*2
Pressure test	1.5 times of flange rated pressure(Hydraulic)

* 1. Punched plate without lining is available upon your request. (Size 15~40mm: Φ1.3×P2.5, size 50~250mm: Φ2.5×P4)
* 2. The net may be damaged if pressure differential exceeds 0.1 MPa. Clean the net to make sure pressure differential is less than 0.1 MPa.

DIMENSIONS

(mm)

Size		15(½″)	20(¾″)	25(1″)	32(1¼″)	40(1½″)	50(2″)	65(2½″)	80(3″)	100(4″)	125(5″)	150(6″)	200(8″)	250(10″)
L	10K	142	146	168	192	198	248	294	340	402	458	528	630	900
	16K	142	146	168	192	198	252	298	348	410	462	532	638	908
	20K	142	146	168	192	198	252	298	348	414	470	540	646	920
	30K	150	150	176	200	206	260	310	360	430	490	560	670	948
H		76	76	80	115	115	170	200	230	270	330	380	480	600
Mass(kg)		4	4	6	9	10	14	27	31	51	79	115	192	365

* Refer to the mass based on JIS 30K flange.

PRESSURE LOSS CHART (60-mesh)

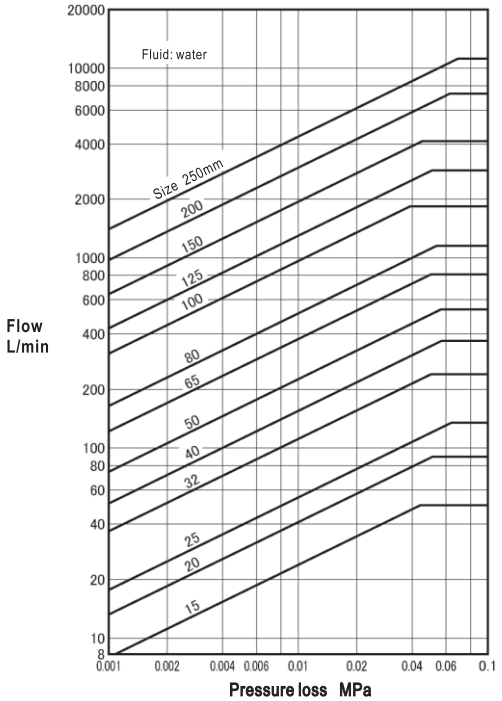

Note: The pressure loss for each mesh number can be calculated by multiplying pressure loss determined using the above chart and a multiplier listed below.

MULTIPLIER LIST

Mesh	Multiplier
40	0.95
80	1.05
100	1.1

* Refer to Page 193 for mesh data.

KY-9, 10 Type Strainer

Carbon steel・stainless steel, flanged

Large diameter, Y-shaped strainer made of carbon steel or stainless steel, with compact body, large filtering area, is ideal to use in for pipelines where automatic valves are used.



SPECIFICATIONS

Type	Carbon steel	Stainless steel
Model name	KY-9	KY-10
Code name	**KY9-N**	**KY10-D**
Applicable fluid	Steam, gases & liquids	
Fluid temperature	Max. 184℃*2.	
Applicable pressure	Max. 1.0MPa	
End connection	Flanged JIS 10KFF	
Materials	Body(350mm & smaller:STPG, 400mm & larger is STPY), Cover(Mild steel) Net(Stainless steel)	Body, Net(Stainless steel)
Painting	Interior:Rust proof oil, Exterior:Red rust prevention	—
Mesh*1	**5, 10, 20, 30, 40, 50 or 60 Mesh**	
Allowed pressure differential	Max.0.1MPa*3.	
Pressure test	Hydraulic 1.5MPa	

*1. Punched plate without lining (Φ10×P12.5) is available upon your request.
*2. Applicable temperature Max. 225℃ is available upon your request.
*3. The net may be damaged if pressure differential exceeds 0.1 MPa. Clean the net to make sure pressure differential is less than 0.1 MPa.

DIMENSIONS

(mm)

Size		150(6″)	200(8″)	250(10″)	300(12″)	350(14″)	400(16″)
L		480	580	680	800	900	1000
H		430	520	620	690	780	860
d		¾″	1″	1″	1″	1″	1″
Mass (kg)	KY-9 Type	62	94	154	209	281	314
	KY-10 Type	49	70	131	166	236	315

Flange code JIS 10KFF

PRESSURE LOSS CHART (40-mesh)

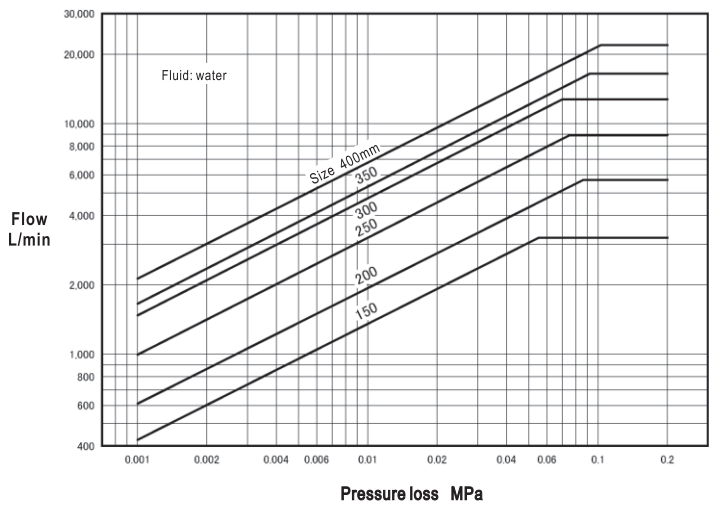

Note: The pressure loss for 60-mesh can be calculated by multiplying pressure loss determined using the above chart and a multiplier listed below.

MULTIPLIER LIST

Mesh	Multiplier
60	1.04

* Refer to Page 193 for mesh data.

CONSTRUCTION

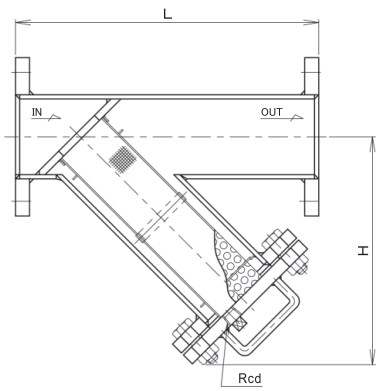

Depending on size, the structure may vary.

KT-1, 1A, 1D Type Strainer

Cast iron・Ductile cast iron, flanged

A new-concept (Straight Type) strainer that is completely different from the conventional products.

Allow easy maintenance, installation, and reduced pressure loss.

KT-1A Type can be easily cleaned with just one bolt and is ideal for installation at places where frequent cleaning is necessary.

KT-1D Type is a davit type strainer, whose cap can be removed easily.



KT-1 Type



KT-1A Type



KT-1D Type

SPECIFICATIONS

Type		Multipurpose type			One touch type	Davit type	
Model name		KT-1			KT-1A	KT-1D	
Code name		**KT1-G**		**KT1-M**	**KT1A-G**	**KT1D-G**	
Size		50~300(2″~12″)			50~150(2″~6″)	250・300(10″・12″)	
Applicable fluid		Steam, gases & liquids			Gases & liquids	Steam, gases & liquids	
Fluid temperature		Max. 184℃*2.			5~90℃	Max. 184℃*2.	
Applicable pressure		Max. 1.0MPa			Refer to the table of applicable pressure below.	Max. 1.0MPa	
End connection		Flanged JIS 10KFF					
Materials	**Body, Cover**	**Cast iron**		**Ductile cast iron**	Cast iron*3.		
	Net	Stainless steel					
Mesh*1.		**60 Mesh**	**20,40,80 or 100 Mesh**	**60 Mesh**	**20,40,80 or 100 Mesh**	**60 Mesh**	**20,40,80 or 100 Mesh**	**20, 40, 60, 80 or 100 Mesh**
Allowed pressure differential		Max.0.1MPa*4.					
Pressure test		Hydraulic 1.75MPa			Refer to the table of pressure tightness below.	Hydraulic 1.75MPa	

＊1. Punched plate without lining is available upon your request. (Size 50~150mm:Φ3×P4, size 200~300mm:Φ4×P6)
※ For products with other diameter, please contact our agent in your area.
＊2. Fluid temperature Max. 220℃ is available upon your request.
＊3. Products with main body made of Ductile cast iron is available upon your request.
＊4. The net may be damaged if pressure differential exceeds 0.1 MPa. Clean the net to make sure pressure differential is less than 0.1 MPa.
＊5. For size 350~500mm of KT-2, 2D Type are available upon your request.
＊6. Applicable pressure Max. 2.0MPa for KT-4W,4H Type with size 50~300mm is available upon your request.
＊7. Products with other options (clogging detector, magnetic absorber, and internal check window) are also available.

DIMENSIONS

(mm)

Size	L	G	d	KT-1 Type			KT-1A Type			KT-1D Type		
				H	A	Mass(kg)	H	A	Mass(kg)	H	A	Mass(kg)
50(2″)	200	—	3/8″	76	132	10(9)	153	200	11	—	—	—
65(2½″)	240	—	3/8″	92	158	15(14)	170	230	17.5	—	—	—
80(3″)	265(261)	—	3/8″	105	200	19(19)	205	280	23.5	—	—	—
100(4″)	290(282)	130	1/2″	128	200	29(29.5)	228	300	35	—	—	—
125(5″)	340(336)	140	1/2″	180	252	43(45)	266	370	53	—	—	—
150(6″)	380(376)	165	1/2″	204	282	64(66)	280	380	74	—	—	—
200(8″)	450(442)	200	1/2″	273	368	106(116)	—	—	—	—	—	—
250(10″)	560(552)	240	1/2″	390	545	210	—	—	—	530	545	220
300(12″)	680(668)	280	1/2″	425	595	300	—	—	—	580	595	310

＊Figures in ( ) are for body material Ductile cast iron.

Flange code JIS 10KFF

APPLICABLE PRESSURE AND PRESSURE TOLERANCE FOR KT-1A Type

Size	Applicable pressure	Pressure tolerance(Hydraulic)
50~100mm	Max. 1.0MPa	1.5MPa
125mm	Max. 0.75MPa	1.13MPa
150mm	Max. 0.5MPa	0.75MPa

CONSTRUCTION

KT-1 Type

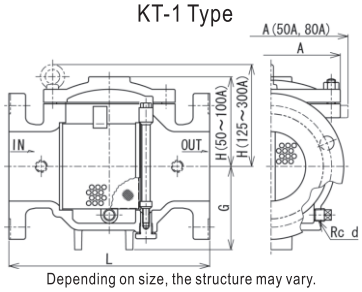

Depending on size, the structure may vary.

KT-1A Type

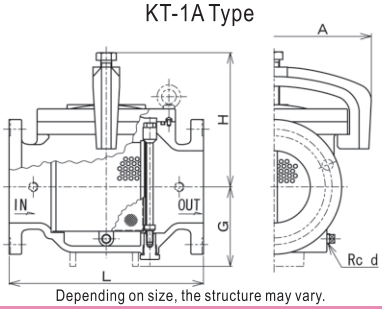

Depending on size, the structure may vary.

KT-1D Type

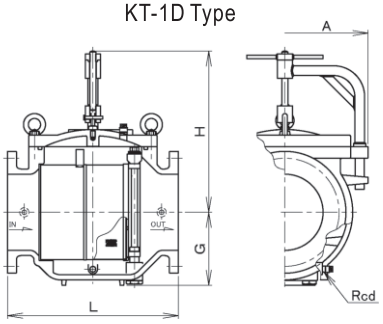

＊ Refer to Page 193 for mesh data.
Note: Size Page 206 for pressure loss.

KT-1PN, 1CN Type Strainer

Cast iron, flanged

A new-concept (Straight Type) strainer that is completely different from the conventional products.

Allow easy maintenance, installation, and reduced pressure loss.

KT-1PN Type has epoxy resin coating and is ideal for water supply pipes. KT-1CN Type has nylon coating.



KT-1PN Type



KT-1CN Type

SPECIFICATIONS

Type	Epoxy resin coating		Nylon coating	
Model name	KT-1PN		KT-1CN	
Code name	KT1PN-G		KT1CN-G	
Applicable fluid	Water & hot water			
Fluid temperature	5~60℃			
Applicable pressure	Max. 1.0MPa			
End connection	Flanged JIS 10KFF			
Materials	Body&Cover(Cast iron) *2., Net(Stainless steel)			
Painting or coating for body	Body and Cover:Epoxy resin coating inside and outside value		Body and cover:Nylon 11 coating inside and outside value	
Mesh*1.	60 Mesh	20,40, 80 or 100 Mesh	60 Mesh	20,40, 80 or 100 Mesh
Allowed pressure differential	Max.0.1MPa*3.			
Pressure test	Hydraulic 1.75MPa			

＊1. Punched plate without lining is available upon your request. (Size 50~150mm:Φ3×P4, size 200~300mm:Φ4×P6)
※ For products with other diameter, please contact our agent in your area.
＊2. Products with main body made of Ductile cast iron is available upon your request.
＊3.The net may be damaged if pressure differential exceeds 0.1 MPa. Clean the net to make sure pressure differential is less than 0.1 MPa.
＊4.Products with other options (clogging detector, magnetic absorber, and internal check window) are also available.

DIMENSIONS

(mm)

Size	L	G	H	A	d	Mass(kg)
50(2″)	200	—	79	132	3/8″	10
65(2½″)	240	—	92	158	3/8″	15
80(3″)	265	—	105	200	3/8″	19
100(4″)	290	130	128	200	½″	29
125(5″)	340	140	180	252	½″	43
150(6″)	380	165	204	282	½″	64
200(8″)	450	200	273	368	½″	106
250(10″)	560	240	390	545	½″	210
300(12″)	680	280	425	595	½″	300

Flange code JIS 10KFF

CONSTRUCTION

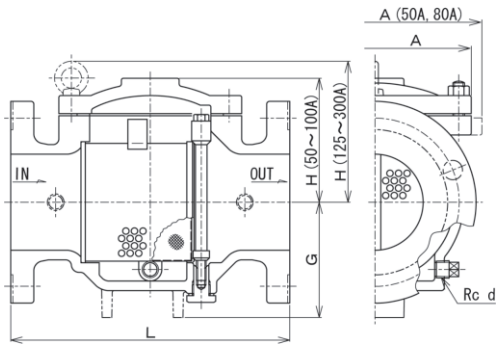

CAUTIONS FOR INSTALLATION AND HANDLING

Apply thermal insulation if the temperature difference between the product and the ambient environment is larger than 40℃.

＊ Refer to Page 193 for mesh data.
Note: See Page 206 for pressure loss.

KT-2, 2D Type Strainer

Carbon steel, flanged

A new-concept (Straight Type)strainer that is completely different from the conventional products.

Allow easy maintenance, installation, and reduced pressure loss.

KT-2 Type is a larger version of KT-1 Type.

KT-2D Type is a Dabit type strainer with an upper cap that can be raised easily.



KT-2 Type



KT-2D Type

SPECIFICATIONS

Type	Multipurpose type	Davit type
Model name	KT-2	KT-2D
Code name	**KT2-N**	**KT2D-N**
Applicable fluid	Water & hot water*2.	
Fluid temperature	5~60℃*2.	
Applicable pressure	Max. 1.0MPa*3.	
End connection	Flanged JIS 10KFF*4.	
Materials	Body&Cover(Carbon steel)*5. , Net (Stainless steel)	
Mesh*1.	**20, 40, 60, 80 or 100 Mesh**	
Allowed pressure differential	Max. 0.1MPa*6.	
Pressure test	Hydraulic 1.5MPa	

＊1. Products with punching plate (Φ4×P6) as the mesh are also available.
※ For products with other diameter, please contact our agent in your area.
＊2. Products for steam and gas (fluid temperature Max. 220°C) are also available.
＊3. For products with applicable pressure less than 2.0MPa, please contact our agent in your area.
＊4. ASME (ANS) 150lb Flange is also available .
＊5. Products with main body made of stainless steel are also available.
＊6. The net may be damaged if pressure differential exceeds 0.1 MPa. Clean the net so that pressure differential is lower than 0.1 MPa.
＊7. For products with size 550mm･600mm, please contact our agent in your area.

DIMENSIONS

(mm)

Size	L	G	d	KT-2 Type			KT-2D Type		
				H	A	Mass(kg)	H	A	Mass(kg)
350(14″)	935	280	¾″	488	675	410	750	675	420
400(16″)	1035	320	¾″	520	745	460	780	745	470
450(18″)	1145	350	¾″	545	795	515	800	795	525
500(20″)	1200	400	¾″	625	905	720	810	905	730

Flange code JIS 10KFF

CONSTRUCTION

KT-2 Type

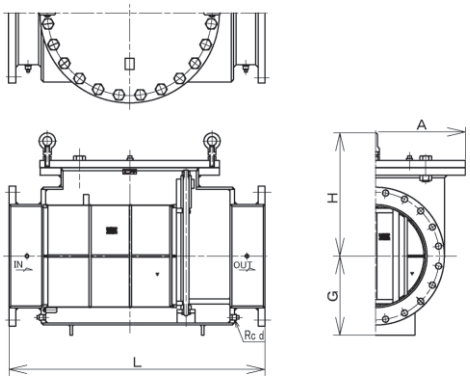

Depending on size, the structure may vary.

KT-2D Type

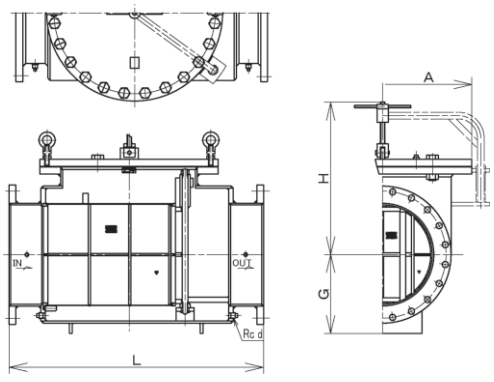

＊ Refer to Page 193 for mesh data.
Note: See Page 206 for pressure loss.

KT-3, 3A Type Strainer

Stainless steel, flanged

A new-concept (Straight Type) strainer that is completely different from the conventional products.

Allow easy maintenance, installation, and reduced pressure loss.

Stainless steel strainer suitable for clean fluid.

KT-3A Type can be easily cleaned with just one bolt and is ideal for installation at places where frequent cleaning is necessary.

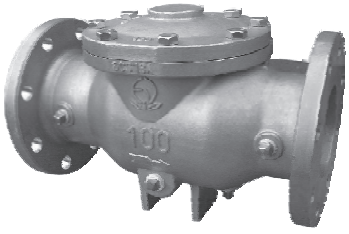

KT-3 Type

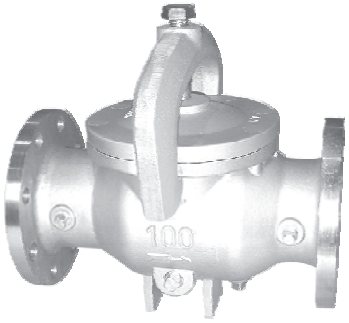

KT-3A Type

SPECIFICATIONS

Type		Multipurpose type		One touch type	
Model name		KT-3		KT-3A	
Code name		KT3-D		KT3A-D	
Size		50~300(2″~12″)		50~150(2″~6″)	
Applicable fluid		Steam, gases & liquids		Gases & liquids	
Fluid temperature		Max. 150℃*2.		5~90℃	
Applicable pressure		Max. 1.0MPa		Refer to the table of applicable pressure below.	
End connection		Flanged JIS 10KFF			
Materials	Body, Cover	Stainless steel		Stainless steel, Cover holder(Ductile cast iron)	
	Net	Stainless steel			
Mesh*1.		60 Mesh	20, 40, 80 or 100 Mesh	60 Mesh	20, 40, 80 or 100 Mesh
Allowed pressure differential		Max.0.1MPa*3.			
Pressure test		Hydraulic 1.5MPa		Refer to the table of pressure tightness below.	

＊1. Punched plate without lining is available upon your request. (Size 50~200mm:Φ3×P4, size 250mm and 300mm:Φ4×P6)
※ For products with other hole sizes, please contact our agent in your area.
＊2. Fluid temperature Max. 220℃ is available upon your request.
＊3. The net may be damaged if pressure differential exceeds 0.1 MPa. Clean the net to make sure pressure differential is less than 0.1 MPa.
＊4. Products with other options (clogging detector, magnetic absorber, and internal check window) are also available.

DIMENSIONS

(mm)

Size	L	G	d	KT-3 Type			KT-3A Type		
				H	A	Mass(kg)	H	A	Mass(kg)
50(2″)	220	—	3/8″	67	107	9	140	200	10
65(2½″)	270	—	3/8″	89	158	14	170	230	15.5
80(3″)	290	—	3/8″	103	200	17	200	280	20.5
100(4″)	350	130	½″	126	202	24	235	305	29
125(5″)	390	140	½″	166	256	42	255	370	49
150(6″)	440	165	½″	194	280	56	275	380	64.5
200(8″)	540	180	½″	249	358	93	—	—	—
250(10″)	680	240	½″	303	458	184	—	—	—
300(12″)	840	280	½″	336	526	268	—	—	—

Flange code JIS 10KFF

CONSTRUCTION

KT-3 Type

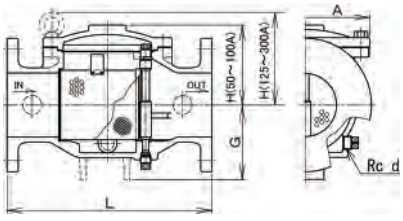

KT-3A Type

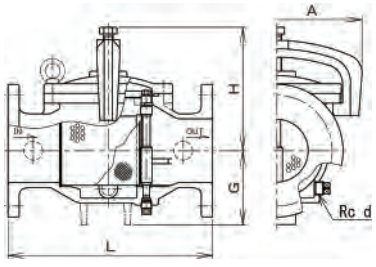

Depending on size, the structure may vary.

APPLICABLE PRESSURE AND PRESSURE TOLERANCE FOR KT-3A Type

Size	Applicable pressure	Pressure tolerance(Hydraulic)
50~100mm	Max. 1.0MPa	1.5MPa
125mm	Max. 0.75MPa	1.13MPa
150mm	Max. 0.5MPa	0.75MPa

* Refer to Page 193 for mesh data.
Note: See Page 206 for pressure loss.

KT-4W, 4H Type Strainer

Ductile cast iron, flanged

A new-concept (Straight Type)strainer that is completely different from the conventional products.
Allow easy maintenance, installation, and reduced pressure loss.
These strainers can be used in a variety of applications with pressure up to 2.0 MPa.
Strainers with nominal diameter 200 ~300 have hinge structure that allows easy maintenance.



SPECIFICATIONS

Type	Standard		High temperature	
Model name	KT-4W		KT-4H	
Code name	**KT4W-M**		**KT4H-M**	
Applicable fluid	Water & hot water		Steam, gases & oils	
Fluid temperature	5~60℃		Max. 220℃	
Applicable pressure	Max. 2.0MPa			
End connection	Flanged JIS 20KRF*2.			
Materials	Body&Cover(Ductile cast iron) , Net (Stainless steel)			
Mesh*1.	**60 Mesh**	**20, 40, 80 or 100 Mesh**	**60 Mesh**	**20, 40, 80 or 100 Mesh**
Allowed pressure differential	Max. 0.1MPa*3.			
Pressure test	Hydraulic 3.0MPa			

＊1. Punched plate without lining is available upon your request. (Size 50~150mm:Φ3×P4, size 200~300mm:Φ4×P6)
※ For products with other diameter, please contact our agent in your area.
＊2. Flanged JIS16KRF and ASME (ANSI) Class 150lb are also available.
＊3. The net may be damaged if pressure differential exceeds 0.1 MPa. Clean the net so that pressure differential is lower than 0.1 MPa.

DIMENSIONS

(mm)

Size	L	G	H	A	B	d	Mass(kg)
50(2″)	210	—	73	144	—	3/8″	13
65(2 1/2″)	240	—	88	162	—	3/8″	18
80(3″)	290	—	106	190	—	3/8″	26
100(4″)	320	130	126	223	—	1/2″	38
125(5″)	380	140	180	260	—	1/2″	59
150(6″)	420	165	195	292	—	1/2″	80
200(8″)	530	200	250	360	570	1/2″	140
250(10″)	660	240	320	462	715	1/2″	240
300(12″)	740	280	355	530	820	1/2″	350

Flange code JIS 20KRF

CONSTRUCTION

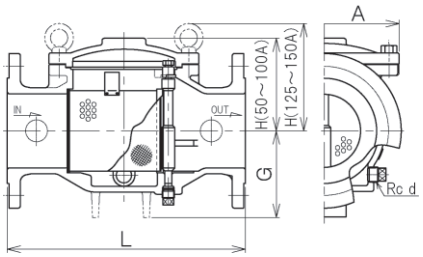

Size 50~150mm

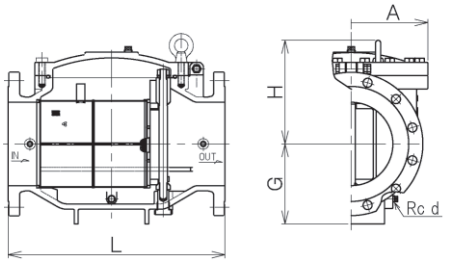

Size 200~300mm

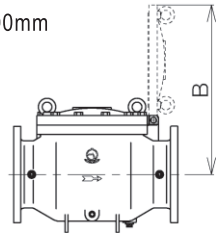

Depending on size, the structure may vary.

＊ Refer to Page 193 for mesh data.
Note: See Page 206 for pressure loss.

KT-5, 5W, 5F, 5FW Type Strainer

Stainless steel・screwed, flanged

A new-concept (Straight Type) strainer that is completely different from the conventional products.

Allow easy maintenance, installation, and reduced pressure loss.

Stainless steel parts that are corrosion resistant and durable.

Small and compact strainer allows easy integration into machines.

Unique design for easy removal of net.



KT-5,5W Type



KT-5F,5FW Type

CONSTRUCTION

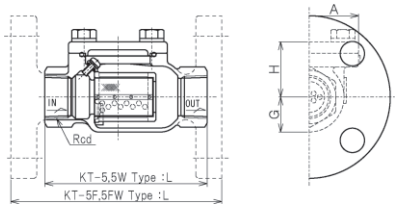

SPECIFICATIONS

Type	Screwed				Flanged			
Model name	KT-5		KT-5W		KT-5F		KT-5FW	
Code name	KT5-D		KT5W-D		KT5F-D		KT5FW-D	
Applicable fluid	Steam, gases & liquids		Liquids & gases		Steam, gases & liquids		Liquids & gases	
Fluid temperature	Max. 150℃*2.		Max. 90℃		Max. 150℃*2.		Max. 90℃	
Applicable pressure	Max. 2.0MPa				Max. 1.0MPa*3.			
End connection	Screwed JIS Rc				Flanged JIS 10KFF*3.			
Materials	Body and Cover (Stainless steel), Net (Stainless steel)							
Mesh*1.	60 Mesh	20,40,80 or 100 Mesh	60 Mesh	20,40,80 or 100 Mesh	60 Mesh	20,40,80 or 100 Mesh	60 Mesh	20,40,80 or 100 Mesh
Allowed pressure differential	Max.0.1MPa*4.							
Pressure test	Hydraulic 3.0MPa				Hydraulic 1.5MPa*3.			

＊1. Products with punching plate (Φ3×P4.33) as the mesh are also available.
※ For products with other diameter, please contact our agent in your area.
＊2. Fluid temperature Max. 220°C is available upon your request.
＊3. We also provide JIS 20KRF flange (applicable pressure Max. 2.0MPa, with standing pressure Max. 3.0MPa).
＊4. The net may be damaged if pressure differential exceeds 0.1 MPa. Clean the net so that pressure differential is lower than 0.1 MPa.

DIMENSIONS

● KT-5,5W Type

(mm)

Size	d	L	G	H	A	Mass(kg)
15(½″)	½″	85	17	35	50	0.4
20(¾″)	¾″	100	22	43	61	0.7
25(1″)	1″	115	26	46	66	1
32(1¼″)	1¼″	135	32	58	80	1.7
40(1½″)	1½″	150	38	66	94	2.3
50(2″)	2″	180	45	77	104	3.5

● KT-5F,5FW Type

(mm)

Size	L	G	H	A	Mass(kg)
15(½″)	120	17	35	50	1.8
20(¾″)	130	22	43	61	2.5
25(1″)	150	26	46	66	3.8
32(1¼″)	170	32	58	80	5.3
40(1½″)	190	38	66	94	6.1
50(2″)	220	45	77	104	8.3

Flange code JIS 10KFF

PRESSURE LOSS CHART (60-mesh)

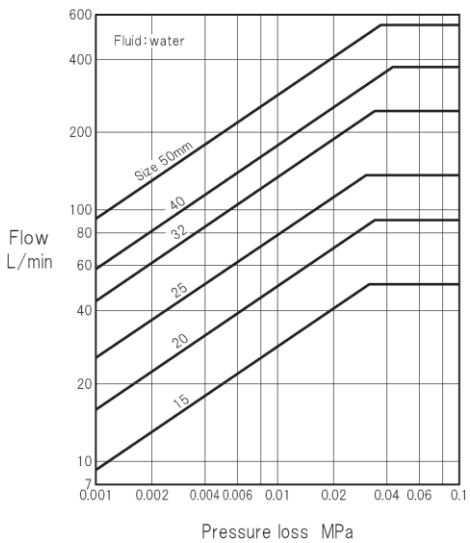

Note: The pressure loss for each mesh number can be calculated by multiplying pressure loss determined using the above chart and a multiplier listed.

MULTIPLIER LIST

Mesh	Multiplier
20	0.9
40	0.95
80	1.05
100	1.1

＊Refer to Page 193 for mesh data.

DATA/KT Type Series Strainer

PRESSURE LOSS CHART (60-mesh)

Applicable models: KT-1,1A,1D,1PN,1CN
KT-2,2D
KT-3,3A
KT-4W,4H

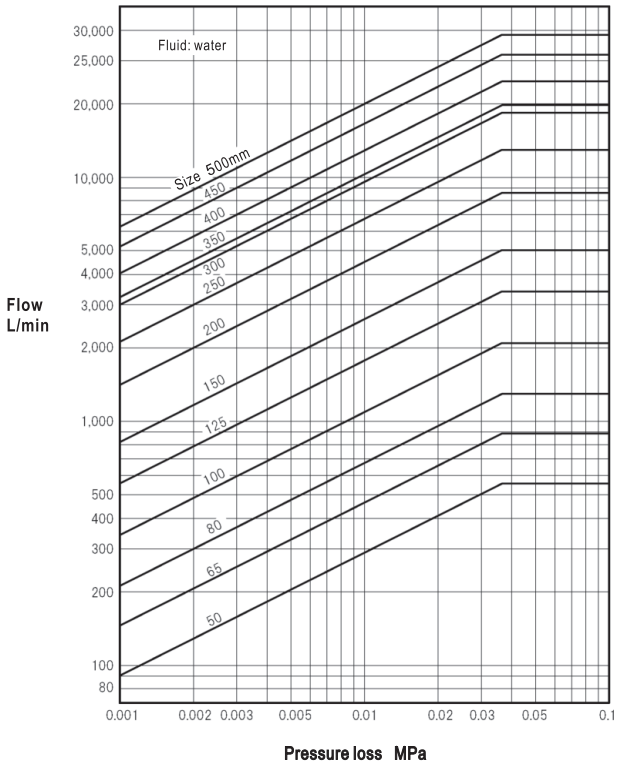

Note: The pressure loss for each mesh number can be calculated by multiplying pressure loss determined using the above chart and a multiplier listed.

MULTIPLIER LIST

Mesh	Multiplier
20	0.9
40	0.95
80	1.05
100	1.1

* Refer to Page 193 for mesh data.

SIZE COMPARISON WITH CONVENTINAL STRAINER

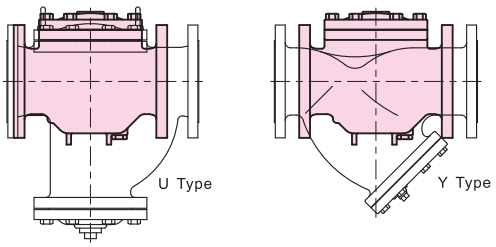

COMPARISON OF MAINTENANCE SPACE

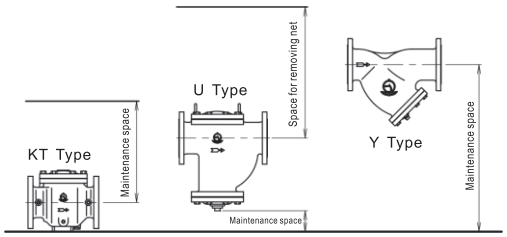

KU-1, 1CN Type Strainer

Cast iron, flanged

U-Type strainer mainly for liquids. Since the net can be removed from the top, there will be no overflowing of liquid when dismantling. Ideal to use for automatic valve for liquids. KU-1CN Type has rust-free nylon coating.



KU-1 Type



KU-1CN Type

SPECIFICATIONS

Type	Standard		Nylon coating	
Model name	KU-1		KU-1CN	
Code name	KU1-G2	KU1-G	KU1CN-G2	KU1CN-G
Size	25~250(1″~10″)		25~125(1″~5″)	
Applicable fluid	Water, oils & air*2.		Water & hot water	
Fluid temperature	Max. 90℃*2.		5~60℃	
Applicable pressure	Max. 1.0MPa			
End connection	Flanged JIS 10KRF			
Materials	Body & Cover(Cast iron), Net(Stainless steel), Net case(Cast bronze)			
Mesh*1.	60 Mesh	40, 80 or 100 Mesh	60 Mesh	40, 80 or 100 Mesh
Allowed pressure differential	Max.0.1MPa*3.			
Pressure test	Hydraulic 1.75MPa			
Painting or coating for Body	Interior:Rust proof oil		Body and cover:Nylon 11 coating inside and outside value	

* 1. Punched plate without lining is available upon your request. (Size 25~40mm:Φ1.3×P2.5, size 50~250mm:Φ2.5×P4)
* 2. Products for steam (fluid temperature Max. 184°C) are also available.
* 3. The net may be damaged if pressure differential exceeds 0.1 MPa. Clean the net so that pressure differential is lower than 0.1 MPa.
* 4. KU-1PN Type size(50~125mm) body interior & exterior with epoxy resin paint is available upon your request.

DIMENSIONS

(mm)

Size	L	A	B	d	Mass(kg)
25(1″)	185	110	55	½″	6.5
32(1¼″)	210	119	58	½″	9.5
40(1½″)	210	119	58	½″	10
50(2″)	230	140	68	½″	12
65(2½″)	270	160	87	1″	20
80(3″)	300	197	92	1″	24
100(4″)	385	245	110	1″	50
125(5″)	425	325	128	1½″	75
150(6″)	520	385	152	1½″	97
200(8″)	696	556	204	2″	292
250(10″)	850	786	238	3″	540

Flange code JIS 10KRF

PRESSURE LOSS CHART (60-mesh)

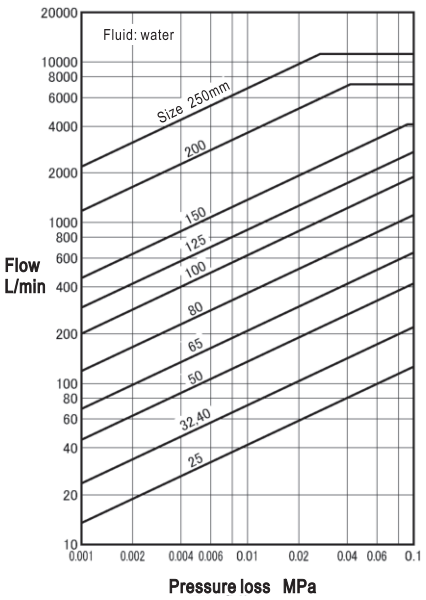

Note: The pressure loss for each mesh number can be calculated by multiplying pressure loss determined using the above chart and a multiplier listed below.

CONSTRUCTION

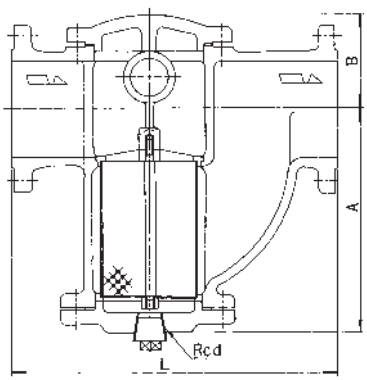

Depending on size, the structure may vary.

MULTIPLIER LIST

Mesh	Multiplier
40	0.95
80	1.05
100	1.1

* Refer to Page 193 for mesh data.

Cautions for Installation and Handling

Apply thermal insulation on KU-1CN Type if the temperature difference between the product and the ambient environment is larger than 40℃.

KU-2, 2A Type Strainer

Stainless steel, flanged

U-Type strainer made of stainless steel, suitable for clean fluid.

Since the net can be removed from the top, there will be no overflowing of liquid when dismantling.

KU-2A Type can be easily cleaned with just one bolt and is ideal for installation at places where frequent cleaning is necessary.



KU-2 Type



KU-2A Type

SPECIFICATIONS

Type	Multipurpose type		One touch type
Model name	KU-2		KU-2A
Code name	KU2-D2	KU2-D	KU2A-D
Applicable fluid	Water, oils & gases		Water & oils
Fluid temperature	Max. 150℃		Max. 80℃
Applicable pressure	Max. 1.0MPa		
End connection	Flanged JIS 10KFF		
Materials	Body, Cover and Net(Stainless steel)		
Mesh	60 Mesh	20, 40, 80 or 100 Mesh	20, 40, 60, 80 or 100 Mesh
Allowed pressure differential	Max.0.1MPa *		
Pressure test	Hydraulic 1.5MPa		

* The net may be damaged if pressure differential exceeds 0.1 MPa. Clean the net so that pressure differential is lower than 0.1 MPa.

DIMENSIONS

(mm)

Size	L	A	d	KU-2 Type			KU-2A Type		
				B	W	Mass(kg)	B	W	Mass(kg)
15(½″)	156	116	⅜″	41	70	3.5	82	114	4
20(¾″)	160	116	⅜″	41	70	3.5	82	114	4
25(1″)	180	129	⅜″	52	85	5.5	90	114	5.5
32(1¼″)	230	164	⅜″	62	106	8.5	100	144	9
40(1½″)	230	164	⅜″	62	106	8.5	100	144	9
50(2″)	260	183	½″	73	113	11	110	144	11.5
65(2½″)	300	229	½″	83	131	17	132	162	18
80(3″)	350	253	¾″	103	194	23	151	246	24.5
100(4″)	400	274	¾″	116	240	37	—	—	—

Flange code JIS 10KFF

PRESSURE LOSS CHART (40-mesh)

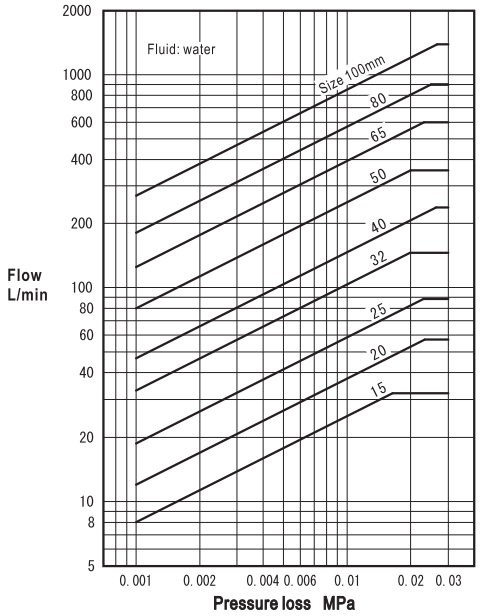

CONSTRUCTION

KU-2 Type

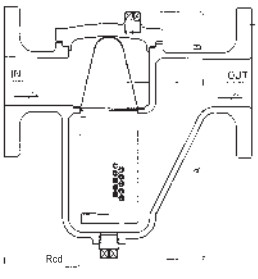

KU-2A Type

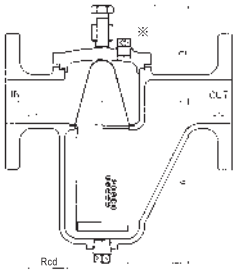

Note:
The pressure loss for 60~100 mesh can be calculated by multiplying pressure loss determined using the above chart and a multiplier listed.

※ This is the accessory item for products of size 32mm or larger.

MULTIPLIER LIST

Mesh	Multiplier
60	1.04
80	1.07
100	1.11

* Refer to Page 193 for mesh data.

KU-3, 4 Type Strainer

Carbon steel・stainless steel, flanged

Large diameter, U-Type strainer made of carbon steel or stainless steel.
The net can be removed from the top; there will be no overflowing of liquid when dismantling.



SPECIFICATIONS

Type	Carbon steel	Stainless steel
Model name	KU-3	KU-4
Code name	**KU3-N**	**KU4-D**
Size	125~400(5″~16″)	125~350(5″~14″)
Applicable fluid	Gases & liquids	
Fluid temperature	Max. 184℃	
Applicable pressure	Max. 1.0MPa	
End connection	Flanged JIS 10KFF	
Materials	Body(Carbon steel pipe), Cover(Mild steel) Net(Stainless steel)	Body & Net(Stainless steel)
Mesh*1.	**5, 10, 20, 30, 40, 50 or 60 Mesh**	
Allowed pressure differential	Max.0.1MPa*2.	
Pressure test	Hydraulic 1.5MPa	
Painting	Interior:Rust proof oil, Exterior:Red rust prevention	—

＊1. Punched plate without lining (Φ10×P12.5) is available upon your request.
＊2. The net may be damaged if pressure differential exceeds 0.1 MPa. Clean the net so that pressure differential is lower than 0.1 MPa.

DIMENSIONS

(mm)

Size	L	A	B	d_1	d_2	Mass(kg)	
						KU-3 Type	KU-4 Type
125(5″)	420	295	175	¾″	½″	67	55
150(6″)	490	345	200	¾″	½″	105	84
200(8″)	570	415	215	¾″	½″	144	114
250(10″)	640	525	235	¾″	½″	204	173
300(12″)	710	665	275	¾″	½″	295	235
350(14″)	770	755	310	¾″	½″	401	307
400(16″)	840	865	335	1″	½″	503	—

Flange code JIS 10KFF

CONSTRUCTION

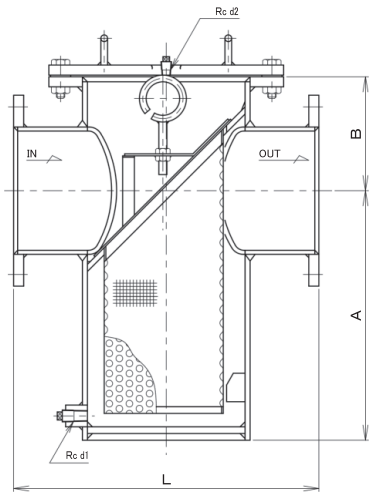

Depending on size, the structure may vary.

MULTIPLIER LIST

Mesh	Multiplier
60	1.04

＊Refer to Page 193 for mesh data.

PRESSURE LOSS CHART (40-mesh)

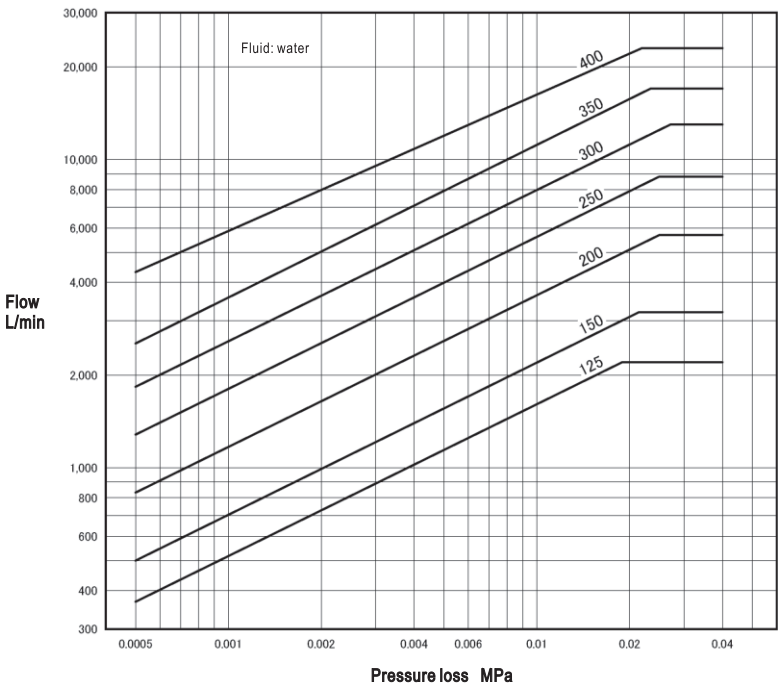

Note: The pressure loss for 60-mesh can be calculated by multiplying pressure loss determined using the above chart and a multiplier listed.

KW-1 Type Strainer

Cast iron, flanged

Double strainer designed for oil, with filtering net in the left and right of switching cock, allows continuous operation even when one filtering net is being cleaned.



Size 20~40mm

CONSTRUCTION

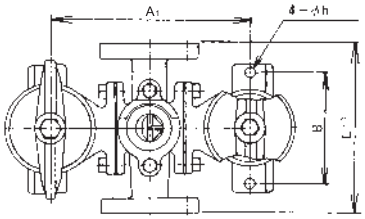

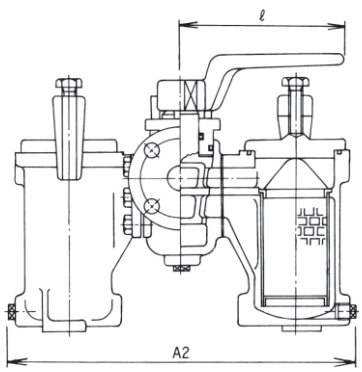

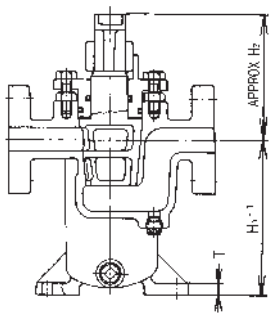

Products with size 50mm and 65mm are slightly different in structure.

SPECIFICATIONS

Model name	KW-1
Code name	**KW1-G2**
Applicable fluid	Oil
Fluid temperature	Max. 90℃
Applicable pressure	Max. 1.0MPa
End connection	Flanged JIS 10KFF
Materials	Body(Cast iron), Net(Stainless steel)
Mesh[*1.]	60 Mesh
Allowed pressure differential	Max.0.1MPa[*2.]
Pressure test	Hydraulic 1.5MPa

∗1. Products with 20, 40, 80, 100, 120, 150, 200 meshes are also available.
∗2. The net may be damaged if pressure differential exceeds 0.1 MPa. Clean the net so that pressure differential is lower than 0.1 MPa.

DIMENSIONS

(mm)

Size	L	H_1	H_2	ℓ	A_1	A_2	B	h	T	Mass(kg)
20(¾″)	190	145	116	150	215	344	120	11	10	17
25(1″)	190	145	116	150	215	344	120	11	10	18
32(1¼″)	218	195	156	215	249	399	120	15	13	27
40(1½″)	250	220	161	215	265	421	130	15	13	36
50(2″)	285	200	165	150	300	449	150	15	16	44
65(2½″)	285	200	165	150	300	449	150	15	16	45

Flange code JIS 10KFF

PRESSURE LOSS CHART (60-mesh)

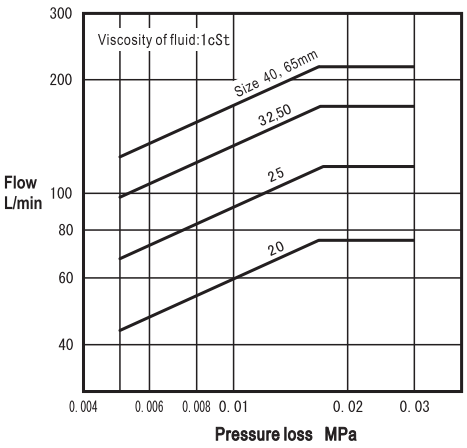

Note:
The pressure loss for 40,80,100-mesh can be calculated by multiplying pressure loss determined using the above chart and a multiplier listed.

MULTIPLIER LIST

Mesh	Multiplier
40	0.96
80	1.03
100	1.07

∗ Refer to Page 193 for mesh data.

PIPING EXAMPLE

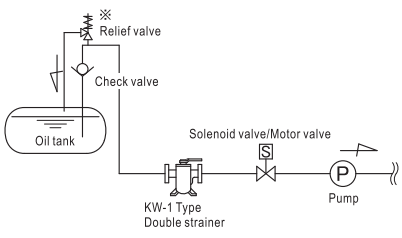

※For the piping shown in the left figure or there is water hammer or thermal expansion of fluid due to ambient temperature is anticipated, install relief valve.

SWITCHING FILTERING NET

Left filtering net
Switch the handle to the left side to allow fluid flow in the left case only.

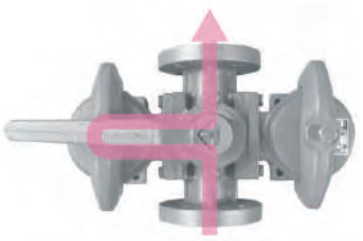

Right filtering net
Switch the handle to the right side to allow fluid flow in the right case only.

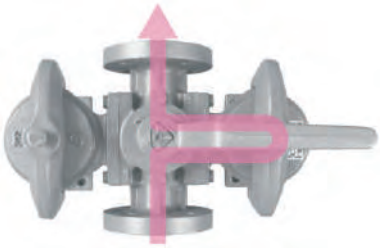

Double filtering nets
Switch the handle to the center of flange at inlet to allow fluid flow in both cases.



KW-2 Type Strainer

Cast iron, flanged

Double strainer for water and oil, with filtering net on the left and right of switching cock, allows continuous operation even when one filtering net is being cleaned.



Size 15~40mm

SPECIFICATIONS

Model name	KW-2	
Code name	KW2-G2	KW2-G
Applicable fluid	Water & oil	
Fluid temperature	Max. 110℃	
Applicable pressure	Max. 0.7MPa	
End connection	Flanged JIS 10KFF	
Materials	Body(Cast iron), Net(Stainless steel)	
Mesh	60 Mesh	Size 15~50mm:20~200 mesh Punched plate Size 65~100mm:5~200 mesh Punched plate
Allowed pressure differential	Max.0.1MPa *2.	
Pressure test	Hydraulic 1.1MPa	

＊1. Punched plate without lining is available upon your request.(Size 15~25mm:Φ3×P4, size 32~100mm:Φ6×P7.5)
＊2. The net may be damaged if pressure differential exceeds 0.1 MPa. Clean the net so that pressure differential is lower than 0.1 MPa.

DIMENSIONS

(mm)

Size	L	H_1	H_2	A_1	A_2	B	h	T	Mass(kg)
15(½″)	170	120	94	190	290	95	12	15	14
20(¾″)	170	120	94	190	290	95	12	15	14
25(1″)	170	120	94	190	290	95	12	15	15
32(1¼″)	220	150	120	250	365	116	12	14	25
40(1½″)	220	150	120	250	365	116	12	14	26
50(2″)	240	180	249	280	410	130	12	14	37
65(2½″)	330	255	325	420	590	175	15	20	90
80(3″)	330	255	325	420	590	175	15	20	90
100(4″)	380	305	341	480	675	200	15	20	135

Flange code JIS 10KFF

CONSTRUCTION

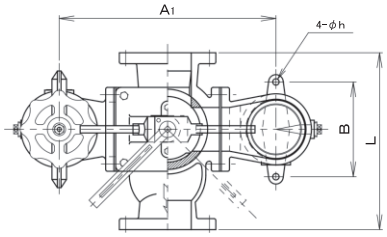

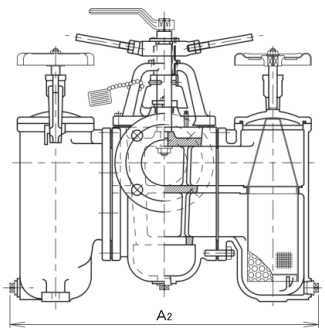

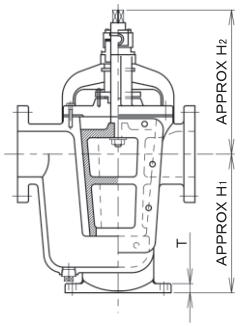

Depending on size, the structure may vary.

PRESSURE LOSS CHART (60-mesh)

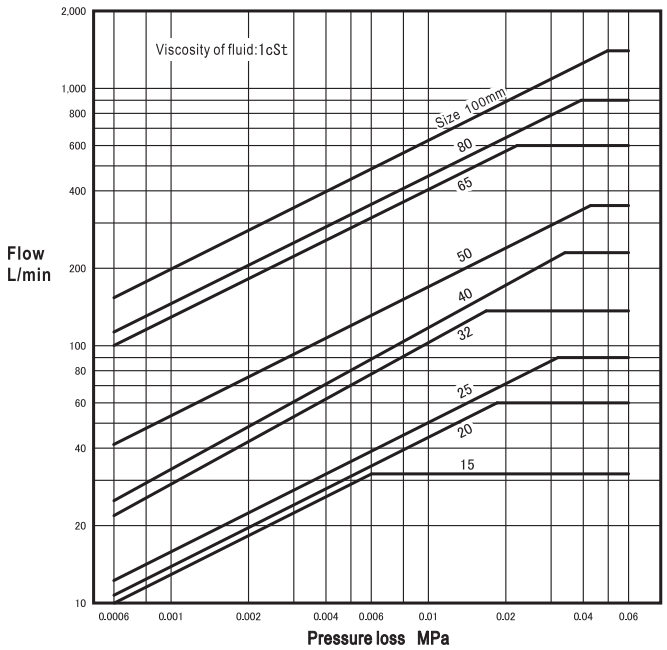

Note:
The pressure loss for 40,80,100-mesh can be calculated by multiplying pressure loss determined using the above chart and a multiplier listed.

PIPING EXAMPLE

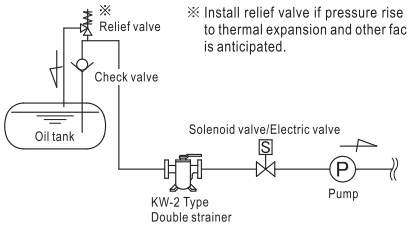

MULTIPLIER LIST

Mesh	Multiplier
40	0.96
80	1.03
100	1.07

＊Refer to Page 193 for mesh data.

MEMO

SOLENOID VALVES

12

There are many solenoid valves in different types. The solenoid valves listed herein are recommended with confidence for these are the results of our long researches and technical experiences.

Model name		End connection	Size	Applicable fluid	Applicable pressure(MPa)	Materials	Page
Energized open	Energized close						
WS-22	WS-22C	Screwed	10~65(⅜″~2½″)	Water, air, inert gases or oils	0~1.0	Body:Cast bronze Diaphragm:Synthetic rubber	214
WF-22	WF-22C	Flanged	15~65(½″~2½″)				215
WS-23	WS-23C	Screwed	15~50(½″~2″)	Water, air, inert gases or oils	0~1.0	Body:Cast bronze Diaphragm:Synthetic rubber	216
WS-25	WS-25C	Screwed	10~50(⅜″~2″)	Water, air, inert gases or oils	0~1.0	Body:Stainless steel Diaphragm:Synthetic rubber	218
WF-25	WF-25C	Flanged	15~50(½″~2″)				
PS-22	PS-22C	Screwed	10~65(⅜″~2½″)	Steam, water, air or oils	0~1.0	Body:Cast bronze Disc:Brass with Teflon tip	220
PF-22	PF-22C	Flanged	15~80(½″~3″)				221
PS-23	PS-23C	Screwed	15~50(½″~2″)	Steam, water, air or oils	0~1.0	Body:Cast bronze Disc:Brass with Teflon tip	222
PS-25	PS-25C	Screwed	10~50(⅜″~2″)	Steam, water, air or oils	0~1.0	Body:Stainless steel Disc:Stainless steel with Teflon tip	224
PF-25	PF-25C	Flanged	15~50(½″~2″)				
PS-16	—	Screwed	10~50(⅜″~2″)	Water	0.05~2.0	Body:Stainless steel Disc:Stainless steel with Teflon tip	226
PF-16	—	Flanged	15~50(½″~2″)				
PS-17	—	Screwed	10~50(⅜″~2″)	Steam	0.05~1.6		
PF-17	—	Flanged	15~50(½″~2″)				
WS-22K	WS-22CK	Screwed	10~50(⅜″~2″)	Water, air or inert gases	0~1.0	Body:Cast bronze Diaphragm:Synthetic rubber	228
PS-22K	PS-22CK	Screwed		Water or air		Body:Cast bronze Disc:Brass with Teflon tip	
VF-13	VF-13C	Flanged	80·100(3″·4″)	Water, air or oils	0.03~1.0	Body:Cast iron Trim:Brass & Synthetic rubber	229
VF-14	VF-14C					Body:Cast bronze Trim:Brass & Synthetic rubber	
WVE-02	—	Flanged	80~200(3″~8″)	Water or hot water	0.03~1.0	Body:Cast iron or ductile cast iron Trim:Cast bronze & Synthetic rubber	231
WVE-02CN	—					Body:Cast iron Trim:Cast bronze & Synthetic rubber	
DS-10	—	Screwed	10~20(⅜″~¾″)	Water, air or oils	0~0.8	Body:Cast bronze Trim:Stainless steel & Synthetic rubber	232
DS-10H	—	Screwed	10~20(⅜″~¾″)	Steam or hot water		Body:Cast bronze Trim:Stainless steel with Teflon tip	
DS-12	—	Screwed	10~20(⅜″~¾″)	Water, steam, air or oils	0~1.0		
DS-13	—	Screwed	8~20(¼″~¾″)	Water, air or oils	0~0.8	Body:Stainless steel Trim:Stainless steel & Synthetic rubber	233
DS-13H	—	Screwed	8~20(¼″~¾″)	Steam or hot water		Body:Stainless steel Trim:Stainless steel with Teflon tip	
DS-14	—	Screwed	8~20(¼″~¾″)	Water, steam, air or oils	0~1.0		
ED-S	—	Screwed	10~50(⅜″~2″)	Water, oils or inert gases	0~0.7	Body:Cast bronze Disc:Stainless steel with Teflon tip	236
ED-F	—	Flanged	15~50(½″~2″)			Body:Cast iron Disc:Cast bronze with Teflon tip	
			65·80(2½″·3″)				
WSE-18	—	Screwed	15~50(½″~2″)	Water, air or inert gases	0.02~1.0	Body:Cast bronze Diaphragm:Synthetic rubber	239
WSE-18A	—						
PSE-18	—	Screwed	15~50(½″~2″)	Water, oils, inert gases or air	0.02~1.0	Body:Stainless steel Disc:Stainless steel & Synthetic rubber	240
PSE-18A	—						
TPS-22	—	Screwed	10~50(⅜″~2″)	Steam or hot water	0~0.7	Body:Cast bronze Disc:Brass with Teflon tip	242
TPF-22	—	Flanged	15~50(½″~2″)				

WS-22, 22C Type Solenoid Valve (for Liquids or Gases)

for Manufacturing and Building Equipments etc. Diaphragm Type

Diaphragm type, screwed

SSS&AAS Used※

※ Contact-free swinging mechanism (AAS※2) with special shape spring (SSS※1).
※1. Special Shape Spring. ※2. Anti Abrasion System

The WS-22 Type series screwed solenoid valves (Momotaro II) inherit features of the conventional WS-12 Type series products .
To make replacement easy, the face-to-face dimensions of the new series are exactly the same as those of WS -12 Type products. There are some changes though, for improving durability, energy-saving performance, and compliance with RoHS directives (products with nominal diameter less than 50mm) and other environmental standards.



WS-22 Type



WS-22C Type

FEATURES

- Three times durable than conventional VENN products (with nominal diameter less than 50mm).
- For liquid and gases.
- Applicable pressure range 0~1.0 MPa.
- Equipped with water hammer reducing component.
- Install in horizontal or vertical pipe (for products with nominal diameter less than 50mm).
- Coil is coated with thermosetting resin that is heat resistant. (with nominal diameter less than 50mm)

SPECIFICATIONS

Operation	Energized open	Energized close
Model name	WS-22*1.	WS-22C*1.
Code name	**WS22-F*1.**	**WS22C-F*1.**
Applicable fluid	Water, air, inert gases*3. & oils(Kerosene, diesel oil level)*4.	
Fluid temperature	5~60℃	
Fluid viscosity	20cSt or less	
Applicable pressure	0~1.0MPa	
Min. pressure differential across the disc	0MPa (0.03MPa for coil installed horizontally.)	
Leakage allowance	Nil (Confirm at pressure gauge. For gases, when 0.02~1.0MPa)	
Rated voltage	Common use:AC100/200V 50/60Hz or AC110/220V 60Hz*5.	
Insulation	Class B	
Ambient temperature	5~60℃	
Protection	Dustproof, splash proof, for indoor use*6. (When used outdoors, also use TB-03 Type terminal box, as rain proof type*7.)	
End connection	Screwed JIS Rc	
Materials	Body(Cast bronze), Diaphragm(Synthetic rubber)	
Installation	Size 50mm or smaller:Can be installed on both horizontal and vertical piping at any angle between the vertical (when the coil part is placed above) and horizontal. Size 65mm:Install the valve vertically in horizontal piping placing coil part above.	
Valve body pressure	Hydraulic 2.0MPa	

* 1. Size 65mm products are WS-12 and 12C Types whose code names are WS12-F and WS12C-F respectively (Coil shape and specifications are different).
* 2. Refer to Page 244 for method of wiring.
* 3. Do not use in fuel gases line.
* 4. If there is any regulation for fuel oils or diesel oil, confirm the body materials according to the regulation.
* 5. For products applicable to special voltage, please contact our agent in your area. (The shape and specifications of suitable products are different.)
* 6. Size 65mm products are dust-proof and drip-proof type.
* 7. Products with TB-03 Type terminal box are rain-proof type. Products with TB-03C Type terminal box are splash-proof (size 50mm or smaller) and rain-proof type (size 65mm).
* 8. We also provide WS-22S Type (size 50mm or smaller), which can reduce the click sound of electromagnet.
* 9. Please contact our agent in your area if the humidity of the place at where the product is used is higher than 85%.

DIMENSIONS AND CURRENT VALUES

(mm)

Size			10(⅜″)	15(½″)	20(¾″)	25(1″)	32(1¼″)	40(1½″)	50(2″)	65(2½″)*
d			⅜″	½″	¾″	1″	1¼″	1½″	2″	2½″
L			63	63	80	90	106	118	140	160
G			15	15	18	22	27	30	37	45
H			92(168)	92(168)	94(169)	100(175)	138(203)	141(206)	153(218)	201(252)
Port size			18	18	23	28	32	40	48	60
Cv value			3	4	7	10	17	20	30	50
Mass(kg)			1(1.4)	1(1.4)	1.1(1.5)	1.6(2)	2.6(3)	3.5(3.9)	5.1(5.5)	8.2(8.6)
Current (A)	AC100V	Rated	0.21(0.35)		0.21(0.35)		0.35(0.35)			0.60(0.60)
		Starting	0.70(1.30)		0.70(1.30)		1.55(1.30)			2.50(2.50)
	AC200V	Rated	0.10(0.18)		0.10(0.18)		0.18(0.18)			0.30(0.30)
		Starting	0.35(0.65)		0.35(0.65)		0.78(0.65)			1.25(1.25)

* Size 65mm products are WS-12, 12C Types whose code names are WS12-F and WS12C-F respectively. (The shape and specifications of coil are different.)

Figures in ( ) are for energized close type.

CONSTRUCTION

WS-22 Type

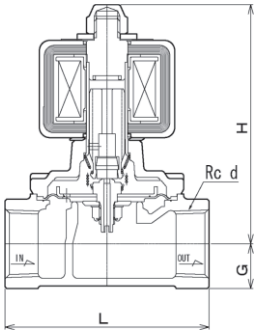

WS-22C Type

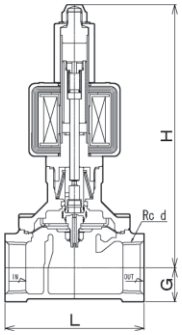

Note:
Depending on size, the structure may vary. Face-to-face dimensions are the same as those of old models WS-12 and 12C Types.

WF-22, 22C Type Solenoid Valve (for Liquids or Gases)

for Manufacturing and Building Equipments etc. Diaphragm Type

Diaphragm type, flanged

SSS&AAS Used※

※ Contact-free swinging mechanism (AAS※2) with special shape spring (SSS※1).
※1. Special Shape Spring. ※2. Anti Abrasion System

The WF-22 Type series flanged solenoid valves (Momotaro II) inherit features of the conventional WF-12 Type series products .

To make replacement easy, the face-to-face dimensions of the new series are exactly the same as those of WF-12 Type products. There are some changes though, for improving durability, energy-saving performance, and compliance with RoHS directives (products with nominal diameter less than 50mm) and other environmental standards.



WF-22 Type



WF-22C Type

■ FEATURES

- Three times durable than conventional VENN products (with nominal diameter less than 50mm).
- For liquid and gases.
- Applicable pressure range 0~1.0 MPa.
- Equipped with water hammer reducing component.
- Install in horizontal or vertical pipe (for products with nominal diameter less than 50mm).
- Coil is coated with thermosetting resin that is heat resistant. (with nominal diameter less than 50mm)

■ SPECIFICATIONS

Operation	Energized open	Energized close
Model name	WF-22*1.	WF-22C*1.
Code name	**WF22-F*1.**	**WF22C-F*1.**
Applicable fluid	Water, air, inert gases*3. & oils(Kerosene, diesel oil level)*4.	
Fluid temperature	5~60℃	
Fluid viscosity	20cSt or less	
Applicable pressure	0~1.0MPa	
Min. pressure differential across the disc	0MPa (0.03MPa for coil installed horizontally.)	
Leakage allowance	Nil (Confirm at pressure gauge. For gases, when 0.02~1.0MPa)	
Rated voltage	Common use:AC100/200V 50/60Hz or AC110/220V 60Hz*5.	
Insulation	Class B	
Ambient temperature	5~60℃	
Protection	Dustproof, splash proof, for indoor use*6. (When used outdoors, also use TB-03 Type terminal box, as rain proof type*7.)	
End connection	Flanged JIS 10KFF	
Materials	Body(Cast bronze), Diaphragm(Synthetic rubber)	
Installation	Size 50mm or smaller:Can be installed on both horizontal and vertical piping at any angle between the vertical (when the coil part is placed above) and horizontal. Size 65mm:Install the valve vertically in horizontal piping placing coil part above.	
Valve body pressure	Hydraulic 2.0MPa	

＊1. Size 65mm products are WF-12 and 12C Types whose code names are WF12-F and WF12C-F respectively (Coil shape and specifications are different).
＊2. Refer to Page 244 for method of wiring.
＊3. Do not use in fuel gases line.
＊4. If there is any regulation for fuel oils or diesel oil, confirm the body materials according to the regulation.
＊5. For products applicable to special voltage, please contact our agent in your area. (The shape and specifications of suitable products are different.)
＊6. Size 65mm products are dust-proof and drip-proof type.
＊7. Products with TB-03 Type terminal box are rain-proof type. Products with TB-03C Type terminal box are splash-proof (size 50mm or smaller) and rain-proof type (size 65mm).
＊8. We also provide WF-22S Type (size 50mm or smaller), which can reduce the click sound of electromagnet.
＊9. Please contact our agent in your area if the humidity of the place at where the product is used is higher than 85%.

■ DIMENSIONS AND CURRENT VALUES

(mm)

Size			15(½″)	20(¾″)	25(1″)	32(1 ¼″)	40(1 ½″)	50(2″)	65(2 ½″)*
L			112	118	140	150	160	190	212
G			21	24	27	32	35	41	50
H			92(168)	94(169)	100(175)	138(203)	141(206)	153(218)	201(252)
Port size			18	23	28	32	40	48	60
Cv value			4	7	10	17	20	30	50
Mass(kg)			2.5(2.9)	3.1(3.5)	4.9(5.3)	6.6(7)	7.9(8.3)	10.4(10.8)	15.2(15.6)
Current (A)	AC100V	Rated	0.21(0.35)	0.21(0.35)		0.35(0.35)			0.60(0.60)
		Starting	0.70(1.30)	0.70(1.30)		1.55(1.30)			2.50(2.50)
	AC200V	Rated	0.10(0.18)	0.10(0.18)		0.18(0.18)			0.30(0.30)
		Starting	0.35(0.65)	0.35(0.65)		0.78(0.65)			1.25(1.25)

＊Size 65mm products are WF-12, 12C Types whose code names are WF12-F and WF12C-F respectively. (The shape and specifications of coil are different.)

Figures in ( ) are for energized close type.
Flanged code JIS 10KFF

■ CONSTRUCTION

WF-22 Type

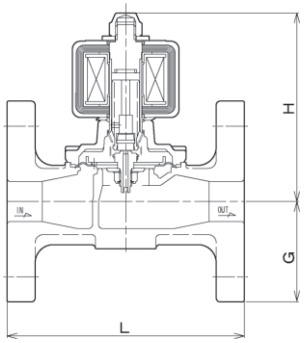

WF-22C Type

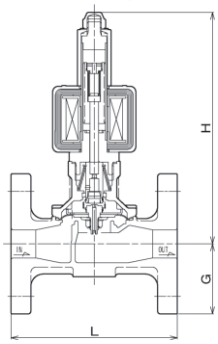

Note:
Depending on size, the structure may vary.
Face-to-face dimensions are the same as those of old models WF-12 and 12C Types.

WS-23, 23C Type Solenoid Valve (for Liquids or Gases)

Diaphragm type, screwed

SSS&AAS Used※

※ Contact-free swinging mechanism (AAS※2) with special shape spring (SSS※1).
※1. Special Shape Spring. ※2. Anti Abrasion System

The WS-23 Type series screwed solenoid valves with strainer (Momotaro II) inherit features of the conventional WS-13 Type series products.
To make replacement easy, the face-to-face dimensions of the new series are exactly the same as those of WS-13 Type products. There are some changes though, for improving durability, energysaving performance, and compliance with RoHS directives and other environmental standards.



WS-23 Type



WS-23C Type

FEATURES

- Three times durable than conventional VENN products.
- With strainer embedded, it is able to save piping space and reduce equipment cost.
- Equipped with water hammer reducing component.
- The plug can be removed easily (without using any special tool) for maintenance.

SPECIFICATIONS

Operation	Energized open	Energized close
Model name	WS-23	WS-23C
Code name	**WS23-F**	**WS23C-F**
Applicable fluid	Water, air, inert gases*2. & oils(Kerosene, diesel oil level)*3.	
Fluid temperature	5~60℃	
Fluid viscosity	20cSt or less	
Applicable pressure	0~1.0MPa	
Min. pressure differential across the disc	0MPa (0.03MPa for coil installed horizontally.)	
Leakage allowance	Nil (Confirm at pressure gauge. For gases, when 0.02~1.0MPa)	
Rated voltage	Common use:AC100/200V 50/60Hz or AC110/220V 60Hz*4.	
Insulation	Class B	
Ambient temperature	5~60℃	
Protection	Dustproof, splash proof, for indoor use (When used outdoors, also use TB-03 Type terminal box, as rain proof type*5.)	
End connection	Screwed JIS Rc	
Materials	Body(Cast bronze), Diaphragm(Synthetic rubber)	
Strainer	60 Mesh*6.	
Installation	Can be installed on both horizontal and vertical piping at any angle between the vertical (when the coil part is placed above) and horizontal.	
Valve body pressure	Hydraulic 2.0MPa	

＊1. Refer to Page 244 for method of wiring.
＊2. Do not use in fuel gases line.
＊3. If there is any regulation for fuel oils or diesel oil, confirm the body materials according to the regulation.
＊4. For products applicable to special voltage, please contact our agent in your area. (The shape and specifications of coil of suitable products are different.)
＊5. Products with TB-03 Type terminal box are rain-proof type. Products with TB-03C Type terminal box are splash-proof type.
＊6. We also provide 40, 80, and 100 meshes with lining.

DIMENSIONS AND CURRENT VALUES

(mm)

Size			15(½″)	20(¾″)	25(1″)	32(1¼″)	40(1½″)	50(2″)
d			½″	¾″	1″	1¼″	1½″	2″
L			95	110	125	150	175	205
G			18	21	25	32	35	41
H			95(171)	100(175)	106(181)	144(209)	149(214)	160(225)
A			51	55	60	75	83	94
C			28	30	35	40	47	56
Port size			18	23	28	32	40	48
Cv value			4	7	10	15	20	27
Mass (kg)			1.3(1.7)	1.6(2)	2.4(2.8)	4(4.4)	5.5(5.9)	8.1(8.5)
Current (A)	AC100V	Rated	0.21(0.35)	0.21(0.35)		0.35(0.35)		
		Starting	0.70(1.30)	0.70(1.30)		1.55(1.30)		
	AC200V	Rated	0.10(0.18)	0.10(0.18)		0.18(0.18)		
		Starting	0.35(0.65)	0.35(0.65)		0.78(0.65)		

Figures in ( ) are for energized close type.

CONSTRUCTION

WS-23 Type

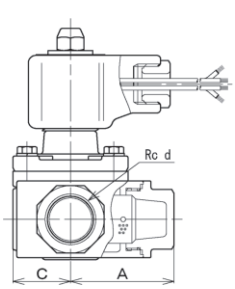

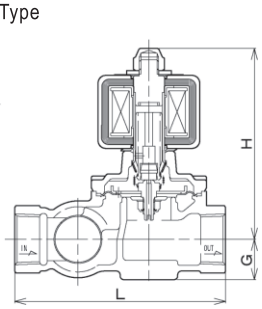

WS-23C Type

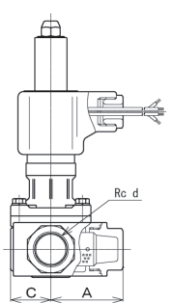

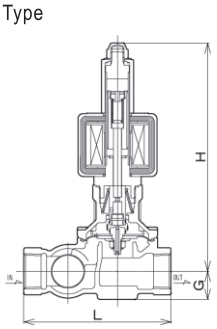

Note:Depending on size, the structure may vary.
Face-to-face dimensions are the same as those of old models WS-13 and 13C Types.

SOLENOID VALVE SIZE SELECTION CHART (for Water)

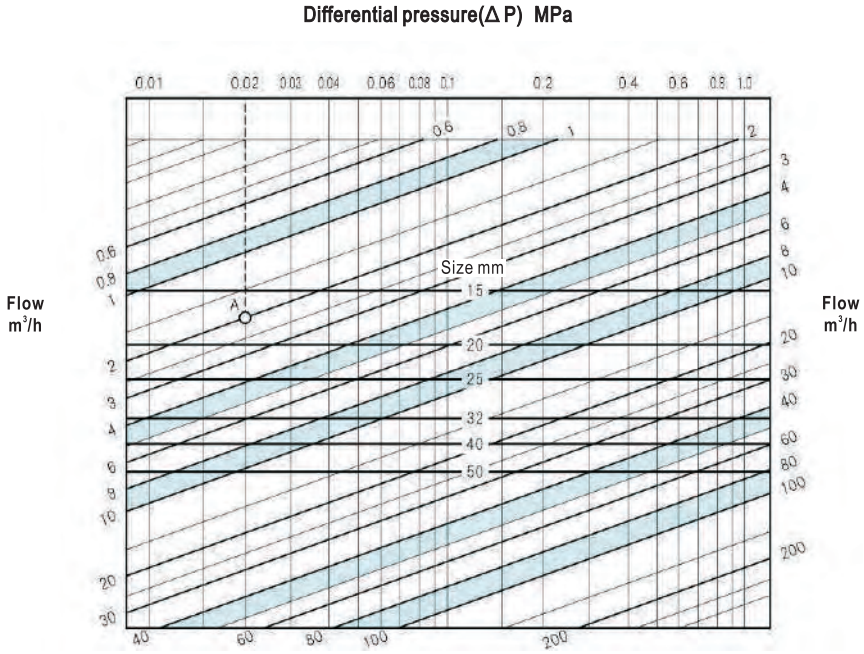

HOW TO USE THE CHART

Example: Determine the size of valve meeting the following conditions:

Primary pressure: 0.3MPa
Secondary pressure: 0.28MPa
Flow of water: 2m³/h

Differential pressure (Δ P) : 0.3−0.28=0.02MPa. Find out the intersection point A between the 0.02MPa differential pressure (ΔP) line and the 2m³/h flow line. Since point A is between the lines representing nominal diameter 15mm and 20mm, the nominal diameter should be the larger one, i.e. 20mm.

SOLENOID VALVE SIZE SELECTION CHART (for Air)

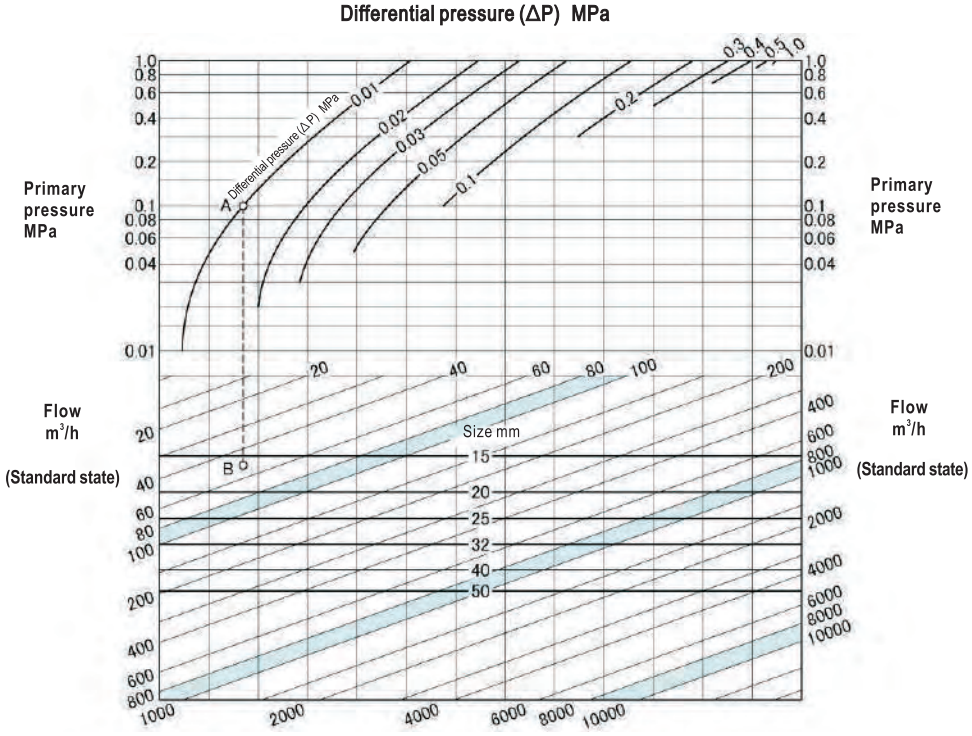

HOW TO USE THE CHART

Example: Determine the size of valve meeting the following conditions:

Primary pressure: 0.1MPa
Secondary pressure: 0.09MPa
Flow of air (at 20℃): 50m³/h (standard state)

Differential Pressure (ΔP) is: 0.1−0.09=0.01MPa. Identify intersection point (A) of the 0.1MPa primary pressure line and the 0.01MPa differential pressure curve. Draw a vertical line from point A until it intersects with the 50m³/h flow line. The intersection point is named B. Since point B is between the 15mm and 20mm size lines, the larger size, which is 20mm, is selected.

WS-25, 25C, WF-25, 25C Type Solenoid Valve (for Liquids or Gases)

Diaphragm type

SSS&AAS Used※

※ Contact-free swinging mechanism (AAS※2) with special shape spring (SSS※1).
※1. Special Shape Spring. ※2. Anti Abrasion System

The WS-25 Type (screwed) and WF-25 Type (flanged) series stainless steel solenoid valves (Momotaro II) inherit features of the conventional WS-15 Type and WF-15 Type series products. To make replacement easy, the face-to-face dimensions of the new series are exactly the same as those of the previous series products. There are some changes though, for improving durability, energysaving performance, and compliance with RoHS directives and other environmental standards.



WS-25 Type



WS-25C Type

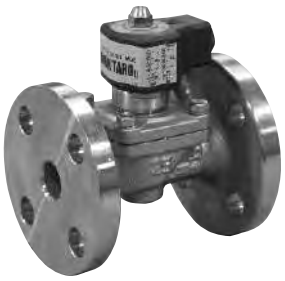

WF-25 Type

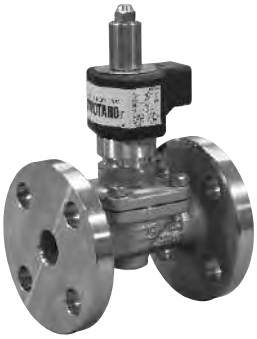

WF-25C Type

FEATURES

- Sthree times durable than conventional VENN products.
- Applicable pressure range 0~1.0 MPa.
- Equipped with water hammer reducing component.
- Install in horizontal or vertical pipe.
- Coil is coated with heat-resistant thermosetting resin.

SPECIFICATIONS

Operation	Energized open		Energized close	
Model name	WS-25	WF-25	WS-25C	WF-25C
Code name	**WS25-D**	**WF25-D**	**WS25C-D**	**WF25C-D**
Size	10~50(⅜″~2″)	15~50(½″~2″)	10~50(⅜″~2″)	15~50(½″~2″)
End connection	Screwed JIS Rc	Flanged JIS 10KFF	Screwed JIS Rc	Flanged JIS 10KFF
Applicable fluid	Water, air, inert gases*2. & oils(Kerosene, diesel oil level)*3.			
Fluid temperature	5~60℃			
Fluid viscosity	20cSt or less			
Applicable pressure	0~1.0MPa			
Min. pressure differential across the disc	0MPa (0.03MPa for coil installed horizontally.)			
Leakage allowance	Nil (Confirm at pressure gauge. For gases, when 0.02~1.0MPa)			
Rated voltage	Common use:AC100/200V 50/60Hz or AC110/220V 60Hz*4.			
Insulation	Class B			
Ambient temperature	5~60℃			
Protection	Dustproof, splash proof, for indoor use. (When used outdoors, also use TB-03 Type terminal box, as rain proof type*5.)			
Materials	Body(Stainless steel), Diaphragm(Synthetic rubber)			
Installation	Can be installed on both horizontal and vertical piping at any angle between the vertical (when the coil part is placed above) and horizontal.			
Valve body pressure	Hydraulic 2.0MPa			

＊1. Refer to Page 244 for method of wiring.
＊2. Do not use in fuel gases line.
＊3. If there is any regulation for fuel oils or diesel oil, confirm the body material according to the regulation.
＊4. For products applicable to special voltage, please contact our agent in your area. (The shape and specifications of coil of suitable products are different.)
＊5. Products with TB-03 Type terminal box are rain-proof type. Products with TB-03C Type terminal box are splash-proof type.

DIMENSIONS AND CURRENT VALUES

(mm)

Size				10(⅜″)	15(½″)	20(¾″)	25(1″)	32(1¼″)	40(1½″)	50(2″)
Screwed	WS-25 WS-25C Type		d	⅜″	½″	¾″	1″	1¼″	1½″	2″
			L	63	63	80	90	106	118	140
			G	15	15	18	22	27	30	37
			H	101(171)	101(171)	103(173)	108(178)	145(206)	148(209)	160(221)
			Port size	18	18	23	28	32	40	48
			Cv value	3	4	7	10	17	20	30
			Mass(kg)	1.1(1.5)	1.1(1.5)	1.3(1.7)	1.8(2.2)	3.4(3.7)	4.3(4.6)	5.7(6.2)
Flanged	WF-25 WF-25C Type		L	—	112	118	140	150	160	190
			G	—	15	18	22	27	30	37
			H	—	101(171)	103(173)	108(178)	145(206)	148(209)	160(221)
			Port size	—	18	23	28	32	40	48
			Cv value	—	4	7	10	17	20	30
			Mass(kg)	—	2.1(2.5)	2.9(3.3)	4.2(4.6)	6.2(6.5)	7.4(7.7)	9.2(9.5)
Current (A)		AC100V	Rated	0.21(0.35)	0.21(0.35)	0.21(0.35)	0.21(0.35)	0.35(0.35)	0.35(0.35)	0.35(0.35)
			Starting	0.70(1.30)	0.70(1.30)	0.70(1.30)	0.70(1.30)	1.55(1.30)	1.55(1.30)	1.55(1.30)
		AC200V	Rated	0.10(0.18)	0.10(0.18)	0.10(0.18)	0.10(0.18)	0.18(0.18)	0.18(0.18)	0.18(0.18)
			Starting	0.35(0.65)	0.35(0.65)	0.35(0.65)	0.35(0.65)	0.78(0.65)	0.78(0.65)	0.78(0.65)

Figures in ( ) are for energized close type.

Flange code JIS 10KFF

FIGURATION DRAWING

WS-25 Type

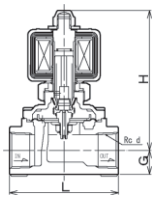

WF-25 Type

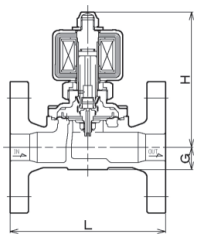

WS-25C Type

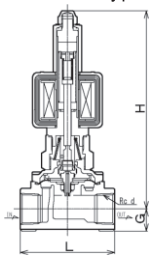

WF-25C Type

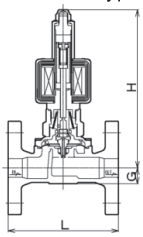

Note: Face-to-face dimensions are the same as those of old models WS-15, 15C and WF-15, 15C Types.

DATA/WS, WF Type Solenoid Valve (for Liquids or Gases)

SIZE SELECTION CHART (for Water)

Applicable models: WS-22, 22C, 22K, 22CK
WF-22, 22C, 22K, 22CK
WS-25, 25C
WF-25, 25C

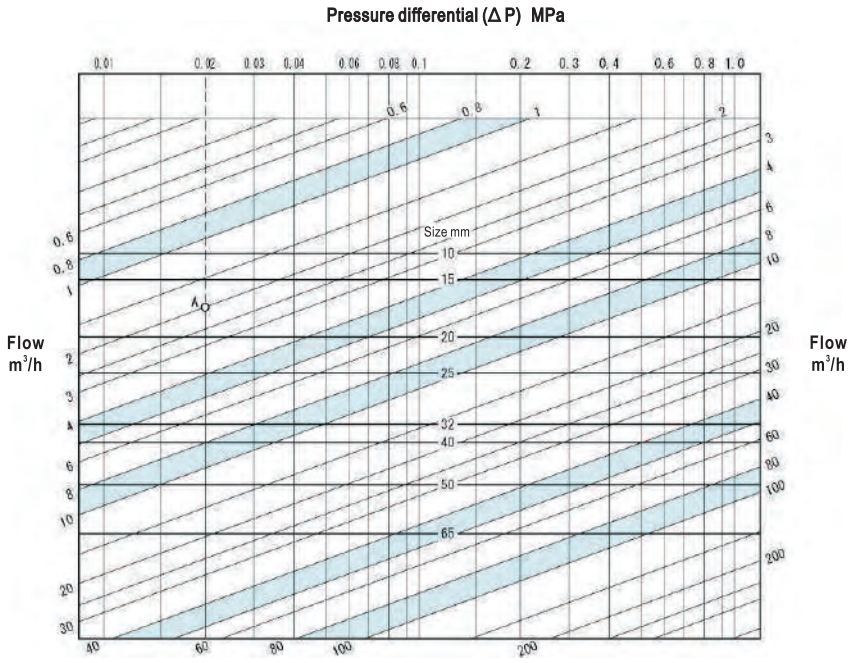

HOW TO USE THE CHART

Example: Determine the size of valve meeting the following conditions:

Primary pressure: 0.3MPa
Secondary pressure: 0.28MPa
Flow of water: 2m³/h

Differential pressure (Δ P) : 0.3−0.28=0.02MPa. Find out the intersection point A between the 0.02MPa differential pressure (ΔP) line and the 2m³/h flow line. Since point A is between the lines representing nominal diameter 15mm and 20mm, the nominal diameter should be the larger one, i.e. 20mm.

Note: Size 65mm is applicable to WS-12, 12C and WF-12, 12C types.

SIZE SELECTION CHART (for Air)

Applicable models: WS-22, 22C, 22K, 22CK
WF-22, 22C, 22K, 22CK
WS-25, 25C
WF-25, 25C

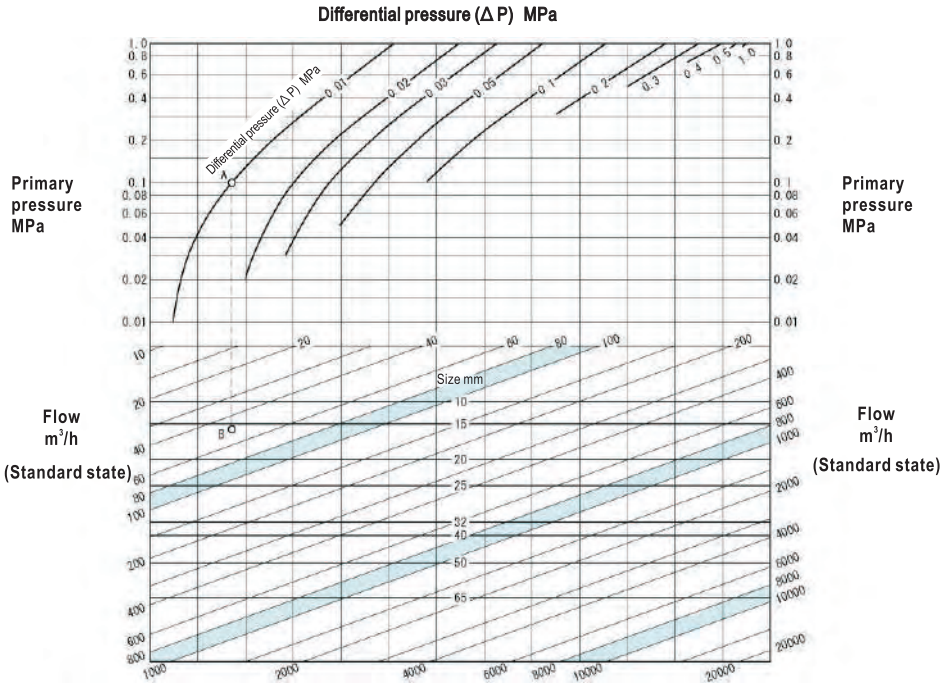

HOW TO USE THE CHART

Example: Determine the size of valve meeting the following conditions:

Primary pressure: 0.1MPa
Secondary pressure: 0.09MPa
Flow of air (at 20℃): 50m³/h (standard state)

Differential pressure (ΔP) is: 0.1−0.09=0.01MPa. Identify intersection point (A) of the 0.1MPa primary pressure line and the 0.01MPa Differential pressure curve. Draw a vertical line from point A until it intersects with the 50m³/h flow line. The intersection point is named B. Since point B is between the 15mm and 20mm size lines, the larger size, which is 20mm, is selected.

Note: Size 65mm is applicable to WS-12, 12C and WF-12, 12C types.

PS-22, 22C Type Solenoid Valve (for Steam, Liquids or Air)

for Manufacturing and Building Equipments etc. Piston-type solenoid valve

Piston type, screwed

SSS&AAS Used※

※ Contact-free swinging mechanism (AAS※2) with special shape spring (SSS※1).
※1. Special Shape Spring. ※2. Anti Abrasion System

The PS-22 Type series screwed solenoid valves (Momotaro II) inherit features of the conventional PS-12 Type series products.
To make replacement easy, the face-to-face dimensions of the new series are exactly the same as those of the previous series products. There are some changes though, for improving durability, energy-saving performance, and compliance with RoHS directives (products with nominal diameter less than 50mm) and other environmental standards.



PS-22 Type
(Size 10~25mm)



PS-22 Type
(Size 32~65mm)



PS-22C Type
(Size 10~25mm)



PS-22C Type
(Size 32~65mm)

FEATURES

- Durability is more than 1 million times.
  Note: The data is based on results of internal tests for size 25mm and lower products.
- Suitable for steam, water, air, and oil.
- Wide range of applicable pressure: 0~1.0 MPa.
- Install in horizontal or vertical pipe.(size 50mm or smaller)
- The coil is coated with heat-resistant thermosetting resin (size 25mm and lower products).

SPECIFICATIONS

Operation	Energized open	Energized close
Model name	PS-22*1.	PS-22C*1.
Code name	**PS22-W*1.**	**PS22C-W*1.**
Applicable fluid	Steam, water, air & oils(Kerosene, diesel oil level)*3.	
Fluid temperature	5~180℃ (For hot water:Max. 100℃)	
Fluid viscosity	20cSt or less	
Applicable pressure	0~1.0MPa	
Min. pressure differential across the disc	0MPa (0.03MPa for coil installed horizontally.)	
Leakage allowance	Steam, water & oils:Nil (Confirm at pressure gauge) Air:50mL/min(standard state) or less (when 0.05~1.0MPa)	
Rated voltage	Common use:AC100/200V 50/60Hz or AC110/220V 60Hz*6.	
Insulation	Class H	
Ambient temperature	5~60℃	
Protection	Dustproof, splash proof, for indoor use *7. (When used outdoors, also use TB-03 Type terminal box, as rain proof type*8.)	
End connection	Screwed JIS Rc	
Materials	Body(Cast bronze), Disc(Size 10~50mm: Brass with Teflon tip, Size 65mm: Stainless steel with Teflon tip)	
Installation	Size 50mm or smaller:Can be installed on both horizontal and vertical piping at any angle between the vertical (when the coil part is placed above) and horizontal. Size 65mm:Install the valve vertically in horizontal piping placing coil part above.	
Valve body pressure	Hydraulic 2.0MPa	

＊ 1. Size 65mm is PS-12, 12C Types, whose code names are PS12-W and PS12C-W respectively (The shape and specifications of coils in these products are different from other products.)
＊ 2. Refer to Page 244 for method of wiring.
＊ 3. If there is any regulation for fuel gas or diesel oil, confirm the body material according to the regulation.
＊ 4. Products with size 32mm or larger and those suitable for special voltage have different shape and dimensions of the coil.
＊ 5. Please select WS Type series if you need air tightness or use the product with well or river water.
＊ 6. For products suitable for special voltage, please contact us. (Products for such purpose have coils with different shape and dimensions.)
＊ 7. Size 32mm and larger products are dustproof and drip-proof type.
＊ 8. Products with TB-03 Type terminal box are rain-proof type. Products with TB-03C Type terminal box are splash-proof type (size 25mm or smaller) or rain-proof type (size 32mm or larger)
＊ 9. In environment with humidity higher than 85%, please use PS-22Y, 22CY Types if the required size is 32~50mm or PS-12Y, 12CY Types if the required size is 65mm. (Please contact our agent in your area for products with size smaller than 25mm.)
＊10. In case of high viscosity (100cSt or larger), Please contact our agent in your area.
＊11. Products with manual operating device are also available. (Size 50mm or smaller)

DIMENSIONS AND CURRENT VALUES

(mm)

Size			10(⅜″)	15(½″)	20(¾″)	25(1″)	32(1¼″)	40(1½″)	50(2″)	65(2½″)*
d			⅜″	½″	¾″	1″	1¼″	1½″	2″	2½″
L			63	63	80	90	106	118	140	160
G			15	15	18	22	27	30	37	45
H			102(174)	102(174)	115(178)	120(183)	150(199)	153(202)	165(214)	200(252)
Port size			18	18	23	28	32	40	48	60
Cv value			3	4.5	7.5	12	18	23	35	50
Mass(kg)			1.1(1.5)	1.1(1.5)	1.4(1.8)	1.9(2.3)	3(3.5)	3.9(4.4)	5.3(5.8)	8.1(8.5)
Current (A)	AC100V	Rated	0.21(0.30)		0.30(0.30)		0.42(0.43)			0.60(0.60)
		Starting	0.70(1.35)		1.25(1.35)		1.62(1.71)			2.50(2.50)
	AC200V	Rated	0.10(0.15)		0.15(0.15)		0.18(0.22)			0.30(0.30)
		Starting	0.35(0.70)		0.63(0.70)		0.80(0.85)			1.25(1.25)

Size 65mm products are PS-12, PS-12C Types whose code names are PS12-W and PS12C-W respectively. (The shape and specifications of coils in these products are different from other products.)

Figures in ( ) are for energized close type.

CONSTRUCTION

PS-22 Type

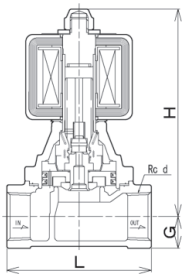

PS-22C Type

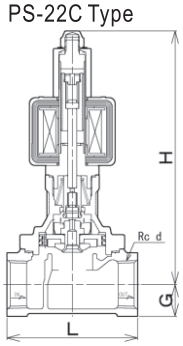

Note:
Depending on size, the structure may vary. (Size 32mm and larger products have different coil structure.)
The face-to-face dimensions are the same as those of old models PS-12 and PS-12C Types.

PF-22, 22C Type Solenoid Valve (for Steam, Liquids or Air)

Piston type, flanged

SSS&AAS Used※

※ Contact-free swinging mechanism (AAS※2) with special shape spring (SSS※1).
※1. Special Shape Spring. ※2. Anti Abrasion System

The PF-22 Type series flanged solenoid valves (Momotaro II) inherit features of the conventional PF-12 Type series products.
To make replacement easy, the face-to-face dimensions of the new series are exactly the same as those of the previous series. There are some changes though, for improving durability, energysaving performance, and compliance with RoHS directives (products with nominal diameter less than 50mm) and other environmental standards.



PF-22 Type
(Size 15~25mm)



PF-22 Type
(Size 32~80mm)



PF-22C Type
(Size 15~25mm)



PF-22C Type
(Size 32~80mm)

FEATURES

- Three times more durable than conventional VENN products. (Size 50mm and lower products)
- Wide range of applicable pressure: 0~1.0 MPa.
- Install in horizontal or vertical pipe. (size 50mm or smaller).
- The coil is coated with heat-resistant thermosetting resin (size 25mm and lower products).

SPECIFICATIONS

Operation	Energized open	Energized close
Model name	PF-22*1.	PF-22C*1.
Code name	**PF22-W*1.**	**PF22C-W*1.**
Applicable fluid	Steam, water, air & oils(Kerosene, diesel oil level)*3.	
Fluid temperature	5~180℃ (For hot water:Max. 100℃)	
Fluid viscosity	20cSt or less	
Applicable pressure	0~1.0MPa(0.05~1.0MPa for size 80mm.)	
Min. pressure differential across the disc	0MPa (0.03MPa for coil installed horizontally. 0.05MPa for size 80mm.)	
Leakage allowance	Steam, water & oils:Nil (Confirm at pressure gauge) Air:50mL/min(standard state) or less (when 0.05~1.0MPa)	
Rated voltage	Common use:AC100/200V 50/60Hz or AC110/220V 60Hz*6.	
Insulation	Class H	
Ambient temperature	5~60℃	
Protection	Dustproof, splash proof, for indoor use*7. (When used outdoors, also use TB-03 Type terminal box, as rain proof type*8.)	
End connection	Flanged JIS 10KFF	
Materials	Body(Cast bronze, Size 80mm:Cast iron), Disc(Size 10~50mm: Brass with Teflon tip, Size 65・80mm: Stainless steel with Teflon tip)	
Installation	Size 50mm or smaller:Can be installed on both horizontal and vertical piping at any angle between the vertical (when the coil part is placed above) and horizontal. Size 65・80mm:Install the valve vertically in horizontal piping placing coil part above.	
Valve body pressure	Hydraulic 2.0MPa	

＊ 1. Size 65・80mm products are PF-12, 12C Types, whose code names are PF12-W, PF12C-W (65A), PF12-S, PF12C-S (80A) respectively (with different shape and specifications of coil).
＊ 2. Refer to Page 244 for method of wiring.
＊ 3. If there is any regulation for fuel gas or diesel oil, confirm the body material according to the regulation.
＊ 4. Size 32mm or larger products and those suitable for special voltage have different shape and dimensions of the coil.
＊ 5. Please select WF Type series if you need air tightness or use the product with well or river water.
＊ 6. For products suitable for special voltage, please contact us. (Products for such purpose have coils with different shape and dimensions.)
＊ 7. Size 32mm and larger products are dustproof and drip-proof type.
＊ 8. Products with TB-03 Type terminal box are rain-proof type. Products with TB-03C Type terminal box are splash-proof type (size 25mm and smaller) or rain-proof type (size 32mm or larger)
＊ 9. In environment with humidity higher than 85%, please use PF-22Y, 22CY Types if the required size is 32~50mm or PF-12Y, 12CY Types if the required size is 65・80mm. (Please contact our agent in your area for products with size below 25mm.)
＊10. In case of high viscosity (100cSt or larger), Please contact our agent in your area.
＊11. Products with manual operating device are also available. (Size 50mm or smaller)

DIMENSIONS AND CURRENT VALUES

(mm)

Size			15(½″)	20(¾″)	25(1″)	32(1 ¼″)	40(1 ½″)	50(2″)	65(2 ½″)*	80(3″)*
L			112	118	140	150	160	190	212	290
G			21	24	27	32	35	41	50	50
H			102(174)	115(178)	120(183)	150(199)	153(202)	165(214)	200(252)	220(272)
Port size			18	23	28	32	40	48	60	73
Cv value			4.5	7.5	12	18	23	35	50	70
Mass (kg)			2.6(3)	3.4(3.8)	5.2(5.6)	7(7.5)	8.3(8.8)	10.6(11.1)	15.1(15.5)	26.5(27)
Current (A)	AC100V	Rated	0.21(0.30)	0.30(0.30)		0.42(0.43)			0.60(0.60)	
		Starting	0.70(1.35)	1.25(1.35)		1.62(1.71)			2.50(2.50)	
	AC200V	Rated	0.10(0.15)	0.15(0.15)		0.18(0.22)			0.30(0.30)	
		Starting	0.35(0.70)	0.63(0.70)		0.80(0.85)			1.25(1.25)	

＊Size 65・80mm products are PF-12, 12C Types, whose code names are PF12-W, PF12C-W (65A), PF12-S, PF12C-S (80A) respectively. (The shape and specifications of coils in these products are different from other products.)

Figures in ( ) are for energized close type.
Flange code JIS 10KFF

CONSTRUCTION

PF-22 Type

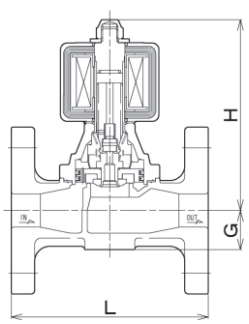

PF-22C Type

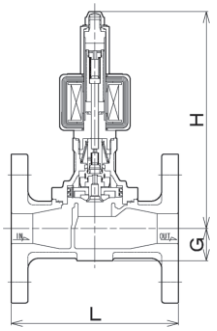

Note:
Depending on size, the structure may vary.
Depending on size, the structure may vary. (Size 32mm or larger products have different coil structure.)
The face-to-face dimensions are the same as those of old models PF-12 and PF-12C Types.

PS-23, 23C Type Solenoid Valve (for Steam, Liquids or Air)

Piston type, screwed

SSS&AAS Used※

※ Contact-free swinging mechanism (AAS※2) with special shape spring (SSS※1).
※1. Special Shape Spring.※2. Anti Abrasion System

The PS-23 Type series screwed solenoid valves with strainer (Momotaro II) inherit features of the conventional PS-13 Type series products. To make replacement easy, the face-to-face dimensions of the new series are exactly the same as those of the previous series. There are some changes though, for improving durability, energy-saving performance, and compliance with RoHS directives and other environmental standards.



PS-23 Type
(Size 15~25mm)



PS-23 Type
(Size 32~50mm)



PS-23C Type
(Size 15~25mm)



PS-23C Type
(Size 32~50mm)

FEATURES

- Three times more durable than conventional VENN products.
- With strainer embedded, it is able to save piping space and reduce equipment cost.
- The plug can be removed easily (without using any special tool) for maintenance.
- The coil is coated with heat-resistant thermosetting resin (size 25mm and lower products).

SPECIFICATIONS

Operation	Energized open	Energized close
Model name	PS-23	PS-23C
Code name	**PS23-W**	**PS23C-W**
Applicable fluid	Steam, water, air & oils(Kerosene, diesel oil level)*2.	
Fluid temperature	5~180℃ (For hot water:Max. 100℃)	
Fluid viscosity	20cSt or less	
Applicable pressure	0~1.0MPa	
Min. pressure differential across the disc	0MPa (0.03MPa for coil installed horizontally.)	
Leakage allowance	Steam, water & oils:Nil (Confirm at pressure gauge) Air:50mL/min(standard state) or less (when 0.05~1.0MPa)	
Rated voltage	Common use:AC100/200V 50/60Hz or AC110/220V 60Hz*5.	
Insulation	Class H	
Ambient temperature	5~60℃	
Protection	Dustproof, splash proof, for indoor use*6. (When used outdoors, also use TB-03 Type terminal box, as rain proof type*7.)	
End connection	Screwed JIS Rc	
Materials	Body(Cast bronze), Disc(Brass with Teflon tip)	
Strainer	60 Mesh*8.	
Installation	Can be installed on both horizontal and vertical piping at any angle between the vertical (when the coil part is placed above) and horizontal.	
Valve body pressure	Hydraulic 2.0MPa	

＊ 1. Refer to Page 244 for method of wiring.
＊ 2. If there is any regulation for fuel oils or diesel oil, confirm body material according to the regulation.
＊ 3. Size 32mm or larger products and those suitable for special voltage have different shape and dimensions of the coil.
＊ 4. Please select WS Type series if you need no leakage at air line or use the product with well or river water.
＊ 5. For products suitable for special voltage, please contact our agent in your area. (The shape and specifications of coils in these products are different from other products.)
＊ 6. Size 32mm and larger products are dustproof and drip-proof type.
＊ 7. Products with TB-03 Type terminal box are rain-proof type. Products with TB-03C Type terminal box are splash-proof type (size 25mm and below) or rain-proof type (size 32mm or larger).
＊ 8. Products with 40, 80, 100 mesh lining are also available.
＊ 9. Select PS-23Y,23CY Types if humidity is higher than 85%.
＊10. Products with manual operating device are also available.

DIMENSIONS AND CURRENT VALUES

(mm)

Size			15(½″)	20(¾″)	25(1″)	32(1 ¼″)	40(1 ½″)	50(2″)
d			½″	¾″	1″	1¼″	1½″	2″
L			95	110	125	150	175	205
G			18	21	25	32	35	41
H			105(177)	121(184)	126(189)	156(205)	161(210)	172(221)
A			51	55	60	75	83	94
C			28	30	35	40	47	56
Port size			18	23	28	32	40	48
Cv value			4.5	7.5	12	16	22	34
Mass(kg)			1.4(1.8)	1.9(2.3)	2.7(3.1)	4.4(4.9)	5.9(6.4)	8.3(8.8)
Current (A)	AC100V	Rated	0.21(0.30)	0.30(0.30)		0.42(0.43)		
		Starting	0.70(1.35)	1.25(1.35)		1.62(1.71)		
	AC200V	Rated	0.10(0.15)	0.15(0.15)		0.18(0.22)		
		Starting	0.35(0.70)	0.63(0.70)		0.80(0.85)		

Figures in ( ) are for energized close type.

CONSTRUCTION

PS-23 Type

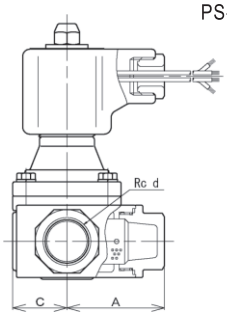

PS-23C Type

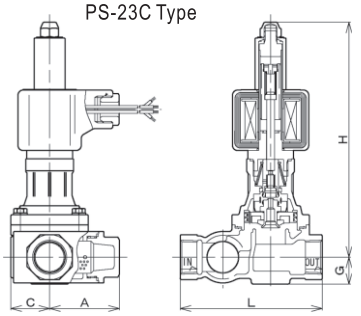

Note: Depending on size, the structure may vary.
Depending on size, the structure may vary. (Size 32mm or larger products have different coil structure.)
The face-to-face dimensions are the same as those of old models PS-13 and PS-13C Types.

DATA/PS-23, 23C Type Solenoid Valve (for Steam, Liquids or Air)

SIZE SELECTION CHART (for Steam)

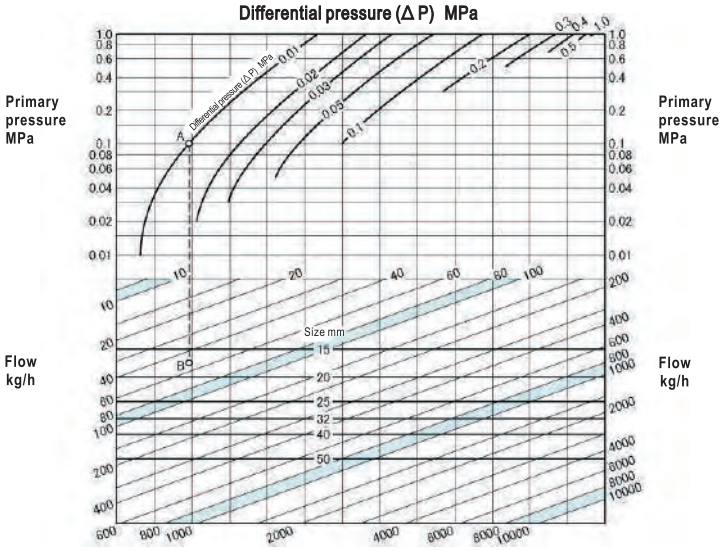

HOW TO USE THE CHART

Example: Determine the size of valve meeting the following conditions:

Primary pressure: 0.1MPa
Secondary pressure: 0.09MPa
Flow of steam (saturated): 50kg/h

Differential pressure (ΔP) is: 0.1−0.09=0.01MPa. Identify intersection point (A) of the 0.1MPa primary pressure line and the 0.01MPa differential pressure curve. Draw a vertical line from point A until it intersects with the 50m^3/h flow line. The intersection point is named B. Since point B is between the 15mm and 20mm size lines, the larger size, which is 20mm, is selected.

SIZE SELECTION CHART (for Water)

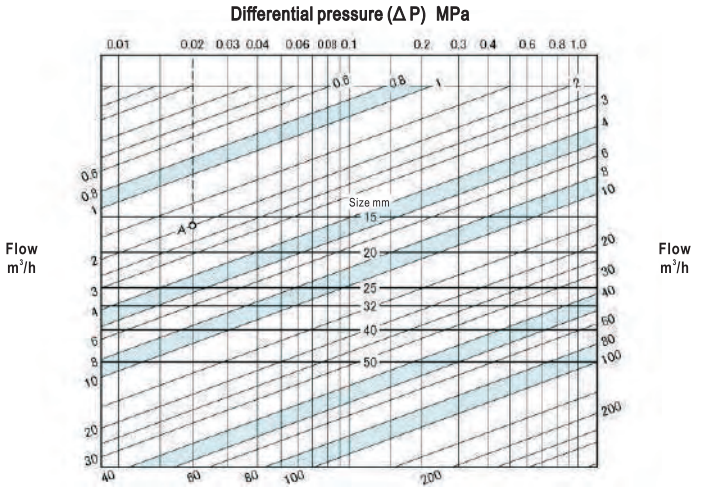

HOW TO USE THE CHART

Example: Determine the size of valve meeting the following conditions:

Primary pressure: 0.3MPa
Secondary pressure: 0.28MPa
Flow of water: 2m^3/h

Differential pressure (ΔP) : 0.3−0.28=0.02MPa. Find out the intersection point A between the 0.02MPa differential pressure (ΔP) line and the 2m^3/h flow line. Since point A is between the lines representing nominal diameter 15mm and 20mm, the nominal diameter should be the larger one, i.e. 20mm.

SIZE SELECTION CHART (for Air)

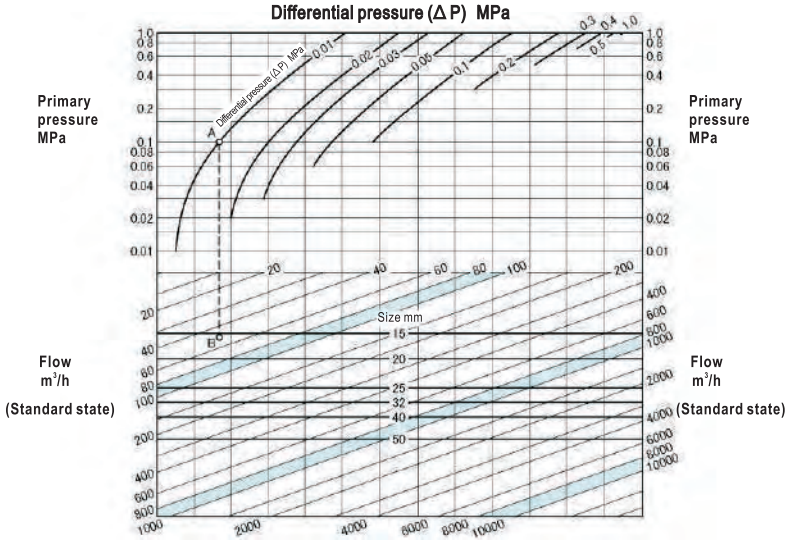

HOW TO USE THE CHART

Example: Determine the size of valve meeting the following conditions:

Primary pressure: 0.1MPa
Secondary pressure: 0.09MPa
Flow of air (at 20℃): 50m^3/h (standard state)

Differential pressure (ΔP) is: 0.1−0.09=0.01MPa. Identify intersection point (A) of the 0.1MPa primary pressure line and the 0.01MPa differential pressure curve. Draw a vertical line from point A until it intersects with the 50m^3/h flow line. The intersection point is named B. Since point B is between the 15mm and 20mm size lines, the larger size, which is 20mm, is selected.

PS-25, 25C, PF-25, 25C Type Solenoid Valve (for Steam, Liquids or Air)

Piston type

SSS&AAS Used※

※ Contact-free swinging mechanism (AAS※2) with special shape spring (SSS※1).
※1. Special Shape Spring. ※2. Anti Abrasion System

The PS-25 Type (screwed) and PF-25 Type (flanged) series stainless steel solenoid valves (Momotaro II) inherit features of the conventional PS-15 Type and PF-15 Type series products. To make replacement easy, the face-to-face dimensions of the new series are exactly the same as those of the previous series. There are some changes though, for improving durability, energy-saving performance, and compliance with RoHS directives and other environmental standards.


PS-25 Type
(Size 10~25mm)


PS-25 Type
(Size 32~50mm)


PS-25C Type
(Size 10~25mm)


PS-25C Type
(Size 32~50mm)


PF-25 Type
(Size 10~25mm)


PF-25 Type
(Size 32~50mm)


PF-25C Type
(Size 10~25mm)


PF-25C Type
(Size 32~50mm)

FEATURES

- Three times more durable than conventional VENN products.
- Wide range of applicable pressure: 0~1.0 MPa.
- Install in horizontal or vertical pipe.
- The coil is coated with heat-resistant thermosetting resin (size 25mm and lower products).

SPECIFICATIONS

Operation	Energized open		Energized close	
Model name	PS-25	PF-25	PS-25C	PF-25C
Code name	**PS25-V**	**PF25-V**	**PS25C-V**	**PF25C-V**
Size	10~50(⅜″~2″)	15~50(½″~2″)	10~50(⅜″~2″)	15~50(½″~2″)
End connection	Screwed JIS Rc	Flanged JIS 10KFF	Screwed JIS Rc	Flanged JIS 10KFF
Applicable fluid	Steam, water, air & oils(Kerosene, diesel oil level)*2.			
Fluid temperature	5~180℃(For hot water:Max.100℃)			
Fluid viscosity	20cSt or less			
Applicable pressure	0~1.0MPa			
Min. pressure differential across the disc	0MPa (0.03MPa for coil installed horizontally.)			
Leakage allowance	Steam, water & oils:Nil (Confirm at pressure gauge), Air:50mL/min(standard state) or less (when 0.05~1.0MPa)			
Rated voltage	Common use:AC100/200V 50/60Hz or AC110/220V 60Hz*5.			
Insulation	Class H			
Ambient temperature	5~60℃			
Protection	Dustproof, splash proof, for indoor use*6. (When used outdoors, also use TB-03 Type terminal box, as rain proof type*7.)			
Materials	Body(Stainless steel), Disc(Stainless steel with Teflon tip)			
Installation	Can be installed on both horizontal and vertical piping at any angle between the vertical (when the coil part is placed above) and horizontal.			
Valve body pressure	Hydraulic 2.0MPa			

＊1. Refer to Page 244 for method of wiring.
＊2. If there is any regulation for fuel oils or diesel oil, confirm body material according to the regulation.
＊3. Size 32mm or larger products and those suitable for special voltage have different shape and dimensions of the coil.
＊4. Please select WS Type series if you need no leakage at air line or use the product with well or river water.
＊5. For products suitable for special voltage, please contact our agent in your area. (Products for such purpose have coils with different shape and dimensions.)
＊6. Size 32mm and larger products are dustproof and drip-proof type.
＊7. Products with TB-03 Type terminal box are rain-proof type. Products with TB-03C Type terminal box are splash-proof type (size 25mm and smaller) or rain-proof type (size 32mm or larger).
＊8. In environment with humidity higher than 85%, please select PS-25Y, 25CY or PF-25Y, 25CY Types if the required size is 32mm larger. (Please contact our agent in your area for size 25mm or smaller products.)
＊9. Products with hand-operating mechanism are also available.

DIMENSIONS AND CURRENT VALUES

(mm)

Size				10(⅜″)	15(½″)	20(¾″)	25(1″)	32(1¼″)	40(1½″)	50(2″)
Screwed	PS-25 PS-25C Type	d		⅜″	½″	¾″	1″	1¼″	1½″	2″
		L		63	63	80	90	106	118	140
		G		15	15	18	22	27	30	37
		H		111(177)	111(177)	124(181)	128(185)	157(202)	160(205)	172(217)
		Port size		18	18	23	28	32	40	48
		Cv value		3	4.5	7.5	12	18	23	35
		Mass(kg)		1.2(1.6)	1.2(1.6)	1.6(1.9)	2.1(2.4)	3.4(3.7)	4.3(4.6)	5.7(6.2)
Flanged	PF-25 PF-25C Type	L		—	112	118	140	150	160	190
		G		—	15	18	22	27	30	37
		H		—	111(177)	124(181))	128(185)	157(202)	160(205)	172(217)
		Port size		—	18	23	28	32	40	48
		Cv value		—	4.5	7.5	12	18	23	35
		Mass(kg)		—	2.4(2.8)	3.3(3.6)	4.8(5.1)	6.5(6.8)	7.7(8)	9.9(10.4)
Current (A)		AC100V	Rated	0.21(0.30)	0.21(0.30)	0.30(0.30)	0.30(0.30)	0.42(0.43)	0.42(0.43)	0.42(0.43)
			Starting	0.70(1.35)	0.70(1.35)	1.25(1.35)	1.25(1.35)	1.62(1.71)	1.62(1.71)	1.62(1.71)
		AC200V	Rated	0.10(0.15)	0.10(0.15)	0.15(0.15)	0.15(0.15)	0.18(0.22)	0.18(0.22)	0.18(0.22)
			Starting	0.35(0.70)	0.35(0.70)	0.63(0.70)	0.63(0.70)	0.80(0.85)	0.80(0.85)	0.80(0.85)

Figures in ( ) are for energized close type.

Flange code JIS 10KFF

FIGURATION DRAWING

PS-25 Type

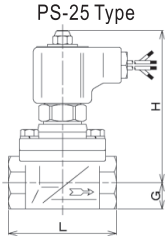

PF-25 Type

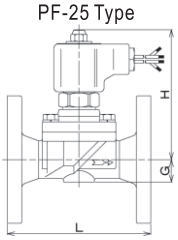

PS-25C Type

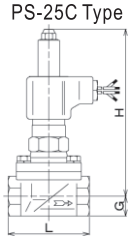

PF-25C Type

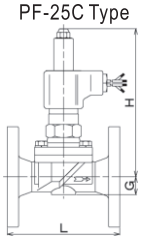

Note: Depending on size, the structure may vary. (Size 32mm or larger products have different coil structure.)
The face-to-face dimensions are the same as those of old models PS-15, 15C and PF-15, 15C Types.

DATA/PS, PF Type Solenoid Valve (for Steam, Water or Air)

SIZE SELECTION CHART (for Steam)

Applicable models: PS-22, 22C / PF-22, 22C
PS-25, 25C / PF-25, 25C

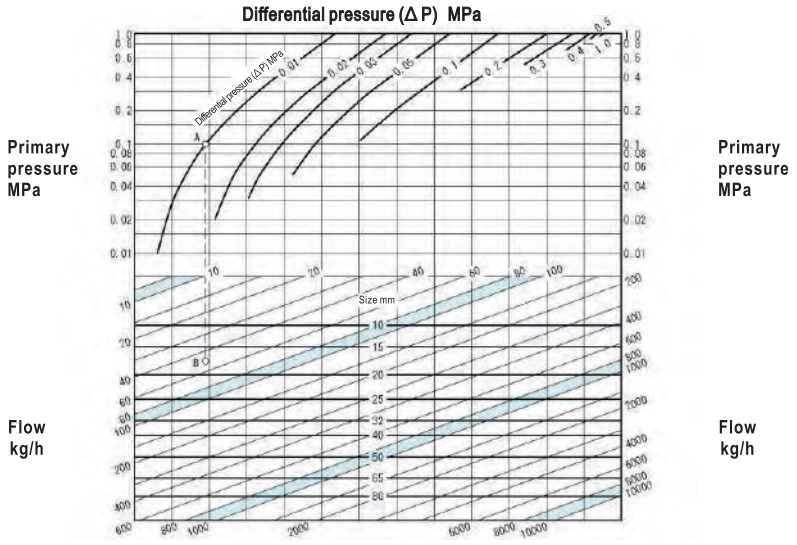

Note: Size 65mm applies to PS/PF-12, 12C types. Size 80mm applies to PF-12, 12C types.

HOW TO USE THE CHART

Example: Determine the size of valve meeting the following conditions:
Primary pressure: 0.1MPa
Secondary pressure: 0.09MPa
Flow of steam (saturated): 50kg/h
Differential pressure(Δ P) is:
0.1−0.09=0.01MPa.
Identify intersection point (A) of the 0.1MPa primary pressure line and the 0.01MPa differential pressure differential curve. Draw a vertical line from point A until it intersects with the 50kg/h flow line. The intersection point is named B. Since point B is between the 15mm and 20mm size lines, the larger size, which is 20mm, is selected.

SIZE SELECTION CHART (for Water)

Applicable models: PS-22, 22C, 22K, 22CK
PF-22, 22C
PS-25, 25C / PF-25, 25C

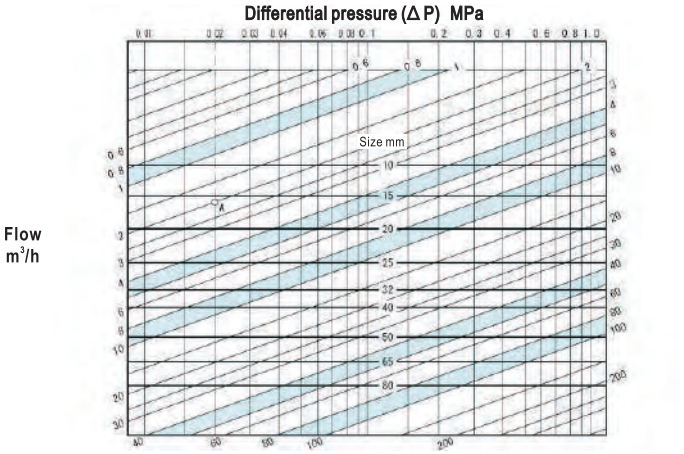

Note: Size 65mm applies to PS/PF-12, 12C types. Size 80mm applies to PF-12, 12C types.

HOW TO USE THE CHART

Example: Determine the size of valve meeting the following conditions:
Primary pressure: 0.3MPa
Secondary pressure: 0.28MPa
Flow of water: 2m³/h
Differential pressure (Δ P) : 0.3−0.28=0.02MPa. Find out the intersection point A between the 0.02MPa differential pressure (ΔP) line and the 2m³/h flow line. Since point A is between the lines representing nominal diameter 15mm and 20mm, the nominal diameter should be the larger one, i.e. 20mm.

SIZE SELECTION CHART (for air)

Applicable models: PS-22, 22C, 22K, 22CK
PF-22, 22C
PS-25, 25C / PF-25, 25C

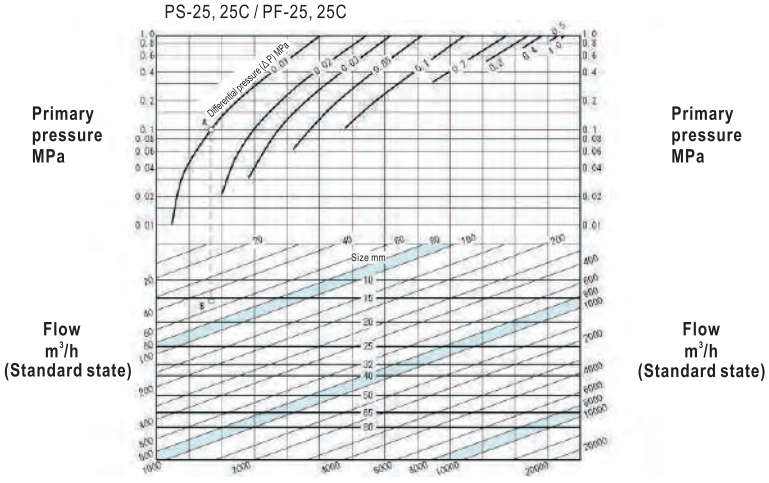

Note: Size 65mm applies to PS/PF-12, 12C types. Size 80mm applies to PF-12, 12C types.

HOW TO USE THE CHART

Example: Determine the size of valve meeting the following conditions:
Primary pressure: 0.1MPa
Secondary pressure: 0.09MPa
Flow of air (at 20℃): 50m³/h (standard state)
Differential pressure (ΔP) is: 0.1−0.09=0.01MPa. Identify intersection point (A) of the 0.1MPa primary pressure line and the 0.01MPa differential pressure curve. Draw a vertical line from point A until it intersects with the 50m³/h flow line. The intersection point is named B. Since point B is between the 15mm and 20mm size lines, the larger size, which is 20mm, is selected.

PS-16, PF-16 (for Water), PS-17, PF-17 (for Steam) Type Solenoid Valve

[Stainless steel] Piston type, for high pressure

A sister product to series bronze solenoid valves for high pressure application.
Although the electromagnet of the part contacting with liquid is made of stainless steel with special steel, cares should be paid in applications requiring high corrosion resistance.

FEATURES

- Suitable for high pressure fluid.
- Stainless steel body, also suitable for high pressure water or steam.

SPECIFICATIONS

Operation	Energized open			
Model name	PS-16	PF-16	PS-17	PF-17
Code name	**PS16-V**	**PF16-V**	**PS17-V**	**PF17-V**
Size	10~50(⅜″~2″)	15~50(½″~2″)	10~50(⅜″~2″)	15~50(½″~2″)
Applicable fluid	Water		Steam	
Fluid temperature	5~100℃		5~200℃	
Fluid viscosity	20cSt or less		—	
Applicable pressure	0.05~2.0MPa		0.05~1.6MPa	
Min. pressure differential across the disc	0.05MPa			
Leakage allowance	2mL/min or less		3g/min or less	
Rated voltage	Common use:AC100/200V 50/60Hz or AC110/220V 60Hz*2.			
Insulation Class	Class H (Silicone mold)			
Ambient temperature	5~60℃		5~40℃	
Protection	Dust & drip proof (When used outdoors, also use TB-03 Type terminal box, as rain proof type)			
End connection	Screwed JIS Rc	Flanged JIS 16KFF	Screwed JIS Rc	Flanged JIS 16KFF
Materials	Body(Stainless steel), Disc(Stainless steel with Teflon tip)			
Installation	Install the valve vertically in horizontal piping placing coil part above.			
Valve body pressure test	Hydraulic 4.0MPa		Hydraulic 3.2MPa	

*1. Refer to Page 244 for method of wiring.
*2. For products suitable for special voltage, please contact our agent in your area.
*3. PS-16 and PF-16 Types with manual mechanism are also available.

DIMENSIONS AND CURRENT VALUES

(mm)

Size				10(⅜″)	15(½″)	20(¾″)	25(1″)	32(1¼″)	40(1½″)	50(2″)
Screwed	PS-16 PS-17 Type	d		⅜″	½″	¾″	1″	1¼″	1½″	2″
		L		63	63	80	90	106	118	140
		G		15	15	18	22	27	30	37
		H		129	129	136	140	163	166	178
		Port size		18	18	23	28	32	40	48
		Cv value		3	4.5	7.5	12	18	23	35
		Mass(kg)		1.5	1.5	2.2	2.6	3.6	4.5	6.4
Flanged	PF-16 PF-17 Type	L		—	112	118	140	150	160	190
		G		—	15	18	22	27	30	37
		H		—	129	136	140	163	166	178
		Port size		—	18	23	28	32	40	48
		Cv value		—	4.5	7.5	12	18	23	35
		Mass(kg)		—	2.8	4	5.3	6.9	8.1	10.6
Current (A)		AC100V	Rated	0.3	0.3	0.4	0.4	0.6	0.6	0.6
			Starting	0.9	0.9	1.3	1.3	2.50	2.50	2.50
		AC200V	Rated	0.15	0.15	0.20	0.20	0.30	0.30	0.30
			Starting	0.45	0.45	0.65	0.65	1.25	1.25	1.25

Flange code JIS 16KFF

FIGURATION DRAWING

PS-16, PS-17 Type

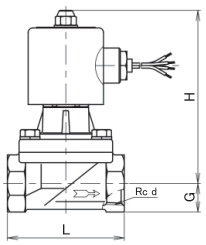

PF-16, PF-17 Type

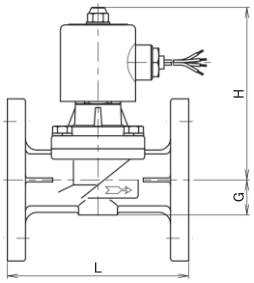



PS-16, PS-17 Type



PF-16, PF-17 Type

PS-16, PF-16 TYPE SIZE SELECTION CHART (for Water)

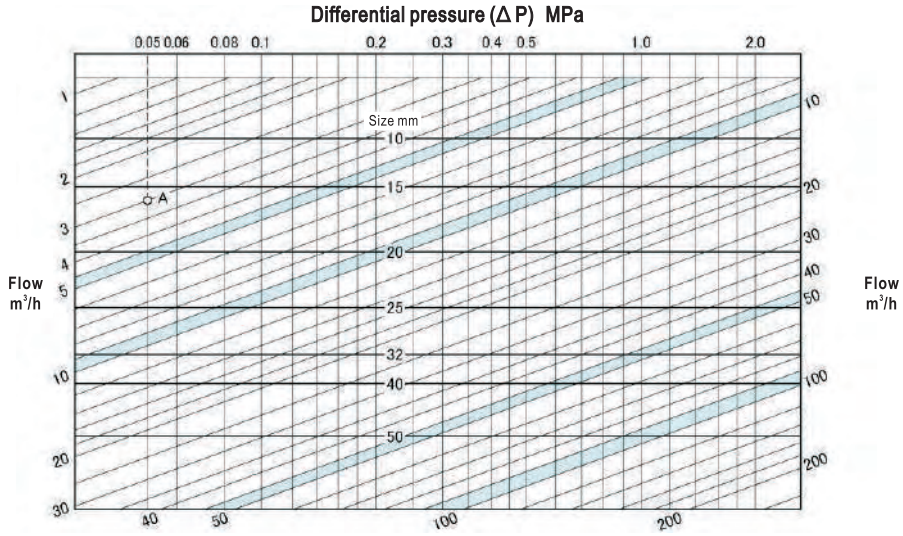

● HOW TO USE THE CHART

Example: Determine the size of valve meeting the following conditions:
Primary pressure: 1.0MPa
Secondary pressure: 0.95MPa
Flow of water: 2m³/h

Differential pressure (Δ P): 1.0−0.95=0.05MPa. Find out the intersection point A between the 0.05MPa differential pressure (Δ P) line and the 3m³/h flow line. Since point A is between the lines representing nominal diameter 15mm and 20mm, the nominal diameter should be the larger one, i.e., 20mm.

PS-17, PF-17 TYPE SIZE SELECTION CHART (for Steam)

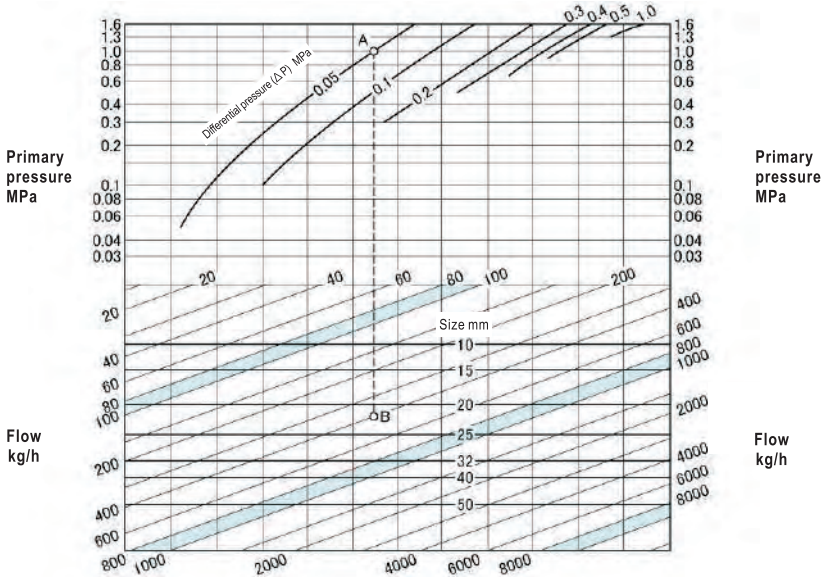

● HOW TO USE THE CHART

Example: Determine the size of valve meeting the following conditions:
Primary pressure: 1.0MPa
Secondary pressure: 0.95MPa
Flow of steam (saturated): 400kg/h
Differential pressure (ΔP) is: 1.0−0.95=0.05MPa. Identify intersection point (A) of the 1.0MPa primary pressure line and the 0.05MPa differential pressure curve. Draw a vertical line from point A until it intersects with the 400kg/h flow line. The intersection point is named B. Since point B is between the 20mm and 25mm size lines, the larger size, which is 25mm, is selected.

K Type Series Solenoid Valve for Fountain

Underwater series
Diaphragm type/Piston type
Screwed

SSS&AAS Used※

※ Contact-free swinging mechanism (AAS※2) with special shape spring (SSS※1).
※1. Special Shape Spring ※2. Anti Abrasion System

K Type series solenoid valves for fountain or underwater applications or places where there is risk of submerging.
Of course, they can also be used for places where there is not such risk.
More durable than old models WS/PS-12K, 12CK Type.
Materials comply with RoHS directives.
Face-to-face dimensions are the same as those of WS/PS-12K, 12CK Type.



WS-22K, PS-22K Type



WS-22CK, PS-22CK Type

FIGURATION DRAWING

WS-22K, PS-22K Type

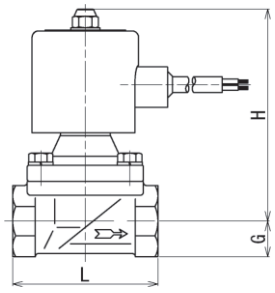

WS-22CK, PS-22CK Type

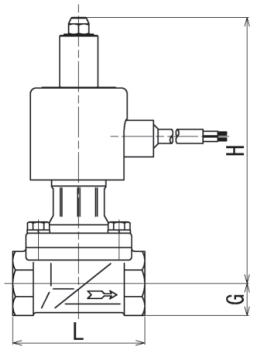

FEATURES

- Solenoid valves for underwater applications (depth up to 1.5m).
- A solution for fountain, pit, or waste water treatment tank.
- Working pressure up to 1.0MPa.
- Install in horizontal or vertical pipe。

SPECIFICATIONS

Operation	Energized open	Energized close	Energized open	Energized close
Model name	WS-22K	WS-22CK	PS-22K	PS-22CK
Code name	**WS22K-F□**	**WS22CK-F**	**PS22K-W□**	**PS22CK-W**
	※ 1 or 2 for rated voltage is required in □			
Applicable fluid	Water, air & inert gases		Water & air	
Fluid temperature	5~60℃		5~80℃	
Applicable pressure	0~1.0MPa			
Min. pressure differential across the disc	0MPa (0.03MPa for coil installed horizontally.)			
Leakage allowance	Nil (Confirm at pressure gauge. For gases, when 0.02~1.0MPa)		Water:Nil (Confirm at pressure gauge,) Air:50mL/min(standard state) or less (When 0.05~1.0MPa)	
Coil	Epoxy mold coil (Case:Cation painting)			
Ambient temperature	5~40℃			
Rated voltage	Refer to table of rated voltage			
Insulation	Class B			
Protection	Underwater application			
Lead wire	1.25mm^2 × 2m, 2-core 2PNCT			
Applicable water depth	Max. 1.5m			
End connection	Screwed JIS Rc			
Body Materials	Cast bronze			
Installation	Can be installed on both horizontal and vertical piping at any angle between the vertical (When the coil part is placed above) and horizontal.			
Valve body pressure test	Hydraulic 2.0MPa			

＊ Lead length of up to 20m is also available upon you request.

RATED VOLTAGE

Operation	Energized open		Energized close	
Model name	WS-22K	PS-22K	WS-22CK	PS-22CK
Rated voltage	**1:AC100V 50/60Hz 110V60Hz 2:AC200V 50/60Hz 220V60Hz**		AC100V 50/60Hz 110V60Hz or AC200V 50/60Hz 220V60Hz	

＊Rated voltage of AC24V is also available.

CURRENT VALUES

(A)

Voltage \ Model		WS-22K WS-22CK	PS-22K PS-22CK
AC100V	Rated(Starting)	0.35(1.30)	0.40(1.70)
AC200V	Rated(Starting)	0.18(0.65)	0.20(0.85)

DIMENSIONS

(mm)

Size	d	L	G	H		Port size	Cv value		Mass(kg)	
				WS-22K Type	PS-22K Type		WS-22K Type	PS-22K Type	WS-22K Type	PS-22K Type
10(⅜″)	⅜″	63	15	112(170)	121(173)	18	3	3	1.7(2)	1.9(2.1)
15(½″)	½″	63	15	112(170)	121(173)	18	4	4.5	1.7(2)	1.9(2.1)
20(¾″)	¾″	80	18	114(171)	126(177)	23	7	7.5	1.9(2.1)	2.1(2.4)
25(1″)	1″	90	22	120(177)	131(182)	28	10	12	2.4(2.6)	2.6(2.9)
32(1¼″)	1¼″	106	27	149(203)	150(199)	32	17	18	3.1(3.6)	3.3(3.8)
40(1½″)	1½″	118	30	152(206)	153(202)	40	20	23	4 (4.5)	4.2(4.7)
50(2″)	2″	140	37	164(218)	165(214)	48	30	35	5.7(6.1)	5.7(6.1)

Figures in ( ) are for energized close type.

VF-13, 13C, 14, 14C Type Solenoid Valve (for Liquids or Gases)

Large diameter, flanged solenoid valve with simple structure and compact body for liquids or gases, automatically adjusts valve opening time, prevents water hammer that may occur when the flow of liquid is extremely large.

VF-13, 13C Type has cast iron body, VF-14, 14C Type has bronze body.



VF-13, 14 type



VF-13C, 14C Type

FEATURES

- With diaphragm in driving unit, bronze cap (including pilot-operating valve), and strainer embedded in flow channel, the valve is highly dirt proof and rust proof.
- Water hammer relaxation mechanism.
- Light-weight, compact, low power consumption, energy saving.
- VF-14, 14C Type is made of bronze and rust-proof material.

SPECIFICATIONS

Operation	Energized open		Energized close	
Model name	VF-13	VF-14	VF-13C	VF-14C
Code name	**VF13-B**	**VF14-F**	**VF13C-B**	**VF14C-F**
Applicable fluid	Water, air & oils*2.			
Fluid temperature	5~60℃			
Fluid viscosity	50cSt or less			
Applicable pressure	0.03~1.0MPa			
Min. pressure differential across the disc	0.03MPa			
Leakage allowance	Nil (Confirm at pressure gauge.)			
Rated voltage	Common use:AC100/200V 50/60Hz or AC110/220V 60Hz*3.			
Rated current	AC100V 50/60Hz:0.20/0.16A, AC200V 50/60Hz:0.10/0.08A			
Starting current	AC100V 50/60Hz:0.5/0.42A, AC200V 50/60Hz:0.25/0.21A			
Insulation	Class B			
Ambient temperature	5~60℃			
Protection	Dustproof, splash proof, for indoor use (When used outdoors, also use TB-03 Type terminal box, as rain proof type*4.)			
End connection	Flanged JIS 10KFF			
Materials	Body(Cast iron)	Body(Cast bronze)	Body(Cast iron)	Body(Cast bronze)
	Trim(Brass and Synthetic rubber), Upper cover(Cast bronze)			
Interior painting for body	Epoxy resin	—	Epoxy resin	—
Installation	Install the valve vertically in horizontal piping placing coil part above.			
Valve body pressure test	Hydraulic 2.0MPa			

* 1. Refer to Page 244 for method of wiring.
* 2. If there is any regulation for fuel oils or diesel oil, confirm body material according to the regulation.
* 3. For products suitable for special voltage, please contact our agent in your area.
* 4. Products with TB-03 Type terminal box are rain-proof type. Products with TB-03C Type terminal box are splash-proof type.
* 5. K Type series for foundation or underwater, with size 65~100mm, are also available.
* 6. VF-13, 14 Type with manual mechanism are also available.

DIMENSIONS (VF-13,13C Type)

(mm)

Size	L	G	H	Port size	Cv value	Mass(kg)
80(3″)	270	79	163(183)	70	70	21
100(4″)	290	92	175(195)	90	100	30

* Figures in ( ) are for VF-13C Type. Other dimensions are common.

Flange code JIS 10KFF

DIMENSIONS (VF-14,14C Type)

(mm)

Size	L	G	H	Port size	Cv value	Mass(kg)
80(3″)	270	79	163(183)	70	70	21
100(4″)	290	92	175(195)	90	100	30

* Figures in ( ) are for VF-14C Type.Other dimensions are common.

Flange code JIS 10KFF

CONSTRUCTION

VF-13, 14 Type

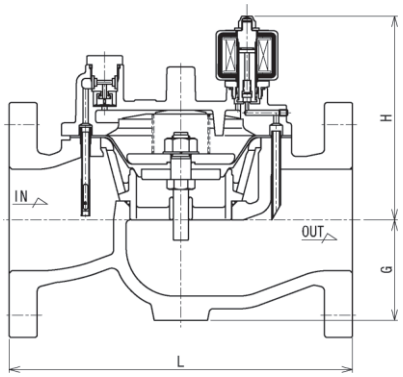

VF-13C, 14C Type

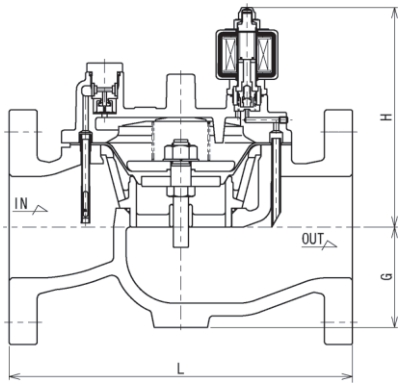

DATA/VF-13, 13C, 14, 14C Type Solenoid Valve (for Liquids or Gases)

SIZE SELECTION CHART (for Water)

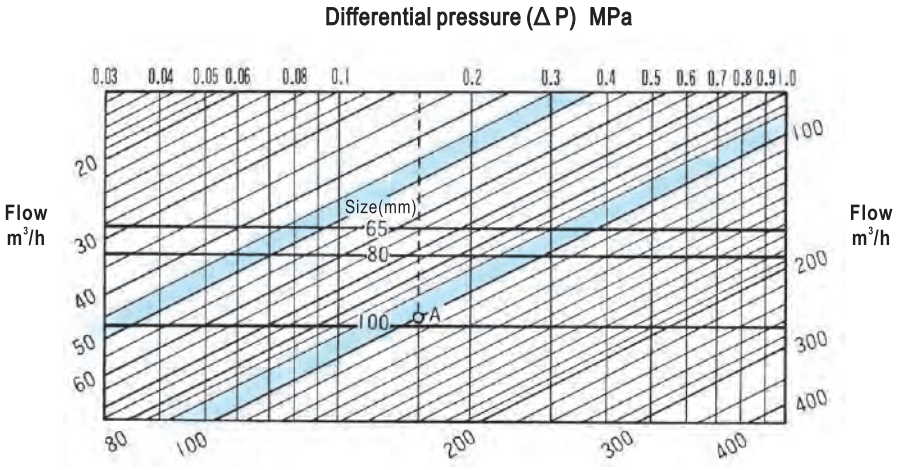

● HOW TO USE THE CHART

Example: Determine the size of valve meeting the following conditions:
Primary pressure: 0.4MPa
Secondary pressure: 0.25MPa
Flow of water: 100m³/h
Differential pressure (Δ P): 0.4−0.25=0.15MPa.
Find out the intersection point A between the 0.15MPa differential pressure (Δ P) line and the 100m³/h flow line. Since point A is between the lines representing nominal diameter 80mm and 100mm, the nominal diameter should be the larger one, i.e., 100mm.

Note: Size 65mm valve is applicable to K Type series for fountain.

SIZE SELECTION CHART (for Air)

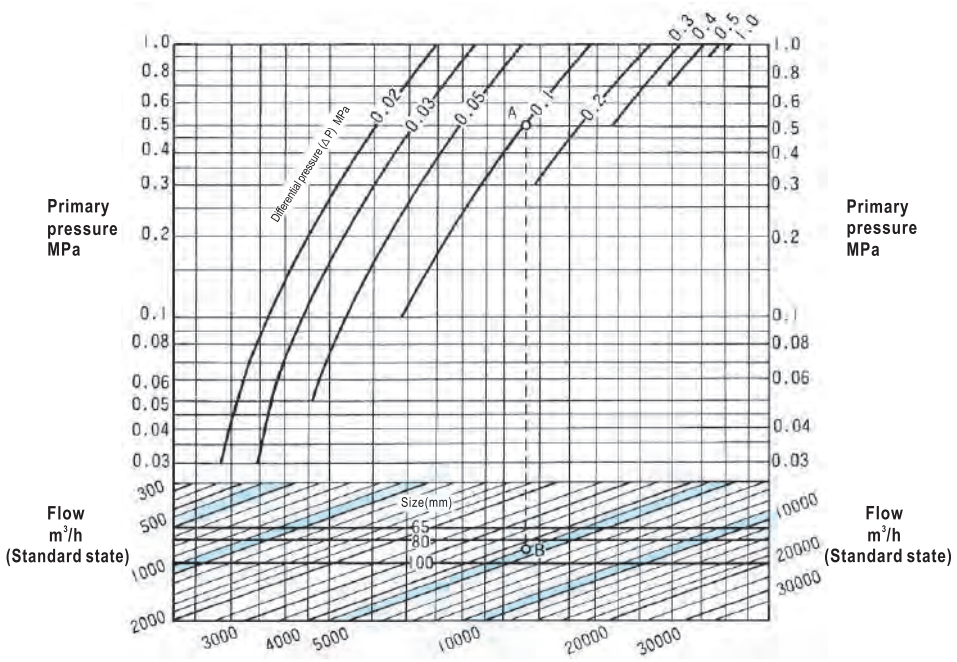

● HOW TO USE THE CHART

Example: Determine the size of valve meeting the following conditions:
Primary pressure: 0.5MPa
Differential pressure (ΔP): 0.1MPa
Air: 20℃
Flow of water (standard state): 4,500m³/h
Identify intersection point (A) of the 0.5MPa primary pressure line and the 0.1MPa differential pressure curve. Draw a vertical line from point A until it intersects with the 4,500m³/h flow line. The intersection point is named B. Since point B is between the 80mm and 100mm size lines, the larger size, which is 100mm, is selected.

Note: Size 65mm valve is applicable to K Type series for fountain.

WVE-02, 02CN Type Solenoid Valve (for Water)

WVE-02 Type solenoid valve can be used with sensors and timers for automatic control or remote control of sprinkling or cooling equipments.

By adjusting valve opening/closing time, the valve can be used to reduce water hammer.



FEATURES

- The detection range and valve opening/closing time can be adjusted by changing the opening degree of needle according to actual conditions.
- Easy maintenance: The disc, seat and pilot-operating unit can be disassembled, adjusted, repaired or displaced easily.

SPECIFICATIONS

Operation		Energized open		
Model name		WVE-02		WVE-02CN
Code name		WVE02-B	WVE02-L	WVE02CN-B
Applicable fluid		Water & hot water		
Fluid temperature		5~60℃		
Applicable pressure		0.03~1.0MPa		
Min. pressure differential across the disc		0.03MPa		
Rated voltage		Common use:AC100/200V 50/60Hz, AC110/220V 60Hz*2		
Rated current		AC100/110V Rated:0.2A, Starting:0.6A, AC200/220V Rated:0.1A, Starting:0.3A		
Insulation		Class B (Silicone mold)		
Protection		Dust & drip proof (When used outdoors, also use TB-03 Type terminal box, as rain proof type)		
Ambient temperature		5~60℃		
End connection		Flanged JIS 10KRF		
Materials	Body	Cast iron	Ductile cast iron	Cast iron
	Trim	Disc & Diaphragm(Synthetic rubber), Seat(Cast bronze)		
Main valve painting		Interior:Epoxy resin		Body and cover:Nylon 11 coating
Installation		Install the valve vertically in horizontal piping placing coil part above.		
Valve body pressure test		Hydraulic 2.0MPa		Hydraulic 1.75MPa

* 1. Refer to Page 244 for method of wiring.
* 2. For products suitable for special voltage, please contact our agent in your area.
* 3. For valve size selection, see Page 101.

DIMENSIONS(Body: Cast iron)

(mm)

Size	L	G	H	H_1	E	Cv value	Mass(kg)
80(3″)	350	110	286	261	117	90	43
100(4″)	400	130	312	300	130	160	60
125(5″)	440	140	343	371	145	250	70
150(6″)	500	165	376	416	173	360	125
200(8″)	600	200	427	522	218	640	200

* Contact our local agent for the dimensions of the main valve whose body is made of Ductile cast iron.

CONSTRUCTION

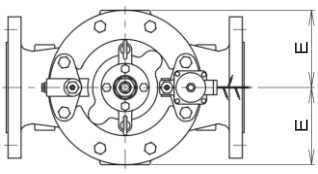

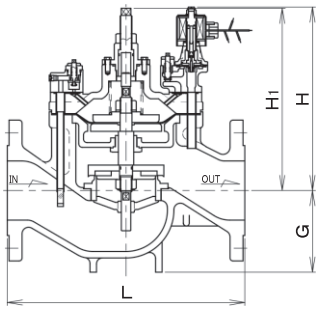

DS-10, 10H, 12 Type Solenoid Valve

Direct acting, small capacity solenoid valves with compact body, simple structure, and orifices designed for a variety of applications.

Depending on orifice diameter, the applicable pressure and flow of this series product are different from those of general purpose solenoid valves.



DS-10,10H Type



DS-12 Type

FEATURES

- Compact, light weight.
- A variety of models available.
- Simple structure allows easy maintenance works.

SPECIFICATIONS

Operation	Energized open				
Model name	DS-10		DS-10H	DS-12	
Code name	DS10-J □1	DS10-J □2	DS10H-W □	DS12-W □	
	※ S, H, M or L for orifice is required in □.				
Applicable fluid	Water, air & oils*2.		Steam & hot water*3.	Water, steam, air & oils*2.	
Fluid temperature	5~80℃		5~175℃*3.	5~180℃*3.	
Fluid viscosity	50cSt or less				
Orifice Applicable pressure	Orifice		S:4mm	H:5.5mm	M:7mm	L:10mm
	Applicable pressure(MPa)	DS-10,10H Type	0.8 or less	0.4 or less	0.25 or less	0.1 or less
		DS-12 Type	1.0 or less	0.55 or less	0.3 or less	0.13 or less
Leakage allowance	Nil (Confirm at pressure gauge.)			Steam, water & oils: Nil (Confirm at pressure gauge) Air:25mL/min (standard state) or less	
Rated voltage	AC100V 50/60Hz	AC200V 50/60Hz	AC100V 50/60Hz or AC200V 50/60Hz*4.		
Insulation	Class B		Class H		
Ambient temperature	5~50℃				
Protection	Dust & drip proof (When used outdoors, also use TB-03 Type terminal box, as rain proof type)				
End connection	Screwed JIS Rc				
Materials	Body(Cast bronze) Trim(Stainless steel & Synthetic rubber)		Body(Cast bronze) Trim(Stainless steel with Teflon tip)	Body(Cast bronze) Trim(Stainless steel with Teflon tip)	
Installation	Can be installed on both horizontal and vertical piping at any angle between the vertical (When the coil part is placed above) and horizontal.*5.				
Valve body pressure test	Hydraulic 2.0MPa				

*1. Refer to Page 244 for method of wiring.
*2. If there is any regulation for fuel oils or diesel oil, confirm body material according to the regulation.
*3. For hot water:Max.100℃.
*4. For DS-12 Type, special voltage items other than the above specified are upon your request.
*5. If there is risk of water splashing, please install the product on horizontal pipe uprightly.
*6. For size selection, please see the diagram in Page 234.

DIMENSIONS

(mm)

Size	d	L	G	H		Cv value				Mass (kg)
				DS-10 Type DS-10H Type	DS-12 Type	Orifice				
						4	5.5	7	10	
10(⅜″)	⅜″	50	14	77	83	0.45	0.75	1.1	2	0.6(0.8)
15(½″)	½″	56	14	77	83	0.45	0.85	1.3	2.1	0.6(0.8)
20(¾″)	¾″	63	17	78	84	0.45	0.85	1.3	2.2	0.7(0.9)

*Figures in ( ) are for DS-12 Type.

CONSTRUCTION

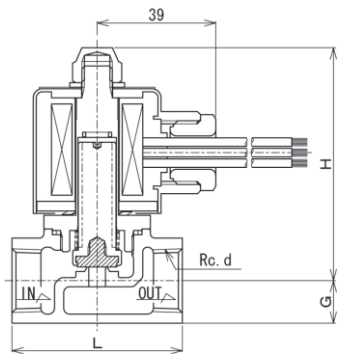

Depending on model, the structure may vary.

CURRENT VALUES

(A)

Voltage \ Model		DS-10 DS-10H	DS-12
AC100V	Rated	0.19	0.25
	Starting	0.57	0.60
AC200V	Rated	0.10	0.13
	Starting	0.29	0.30

DS-13, 13H, 14 Type Solenoid Valve

These products are DS-10, 10H, and 12 Type solenoid valves with stainless steel bodies.

Direct acting, small capacity solenoid valves with compact body, simple structure, and orifices designed for a variety of applications.

Depending on orifice diameter, the applicable pressure and flow of this series product are different from those of general purpose solenoid valves.



DS-13,13H Type



DS-14 Type

FEATURES

- With stainless steel body, these products are ideal for clean fluids in various applications.
- Compact, light weight.
- A variety of models available.
- Simple structure allows easy maintenance works.

SPECIFICATIONS

Operation	Energized open				
Model name	DS-13		DS-13H	DS-14	
Code name	**DS13-D□1**	**DS13-D□2**	**DS13H-V□**	**DS14-V□**	
	※ S, H, M or L for orifice is required in □.				
Applicable fluid	Water, air & oils*2.		Steam & hot water*3.	Water, steam, air & oils*2.	
Fluid temperature	5~80℃		5~175℃*3.	5~180℃*3.	
Fluid viscosity	50cSt or less				
Orifice Applicable pressure	**Orifice**		**S:4mm**	**H:5.5mm**	**M:7mm** / **L:10mm**
	Applicable pressure(MPa)	**DS-13,13H Type**	0.8 or less	0.4 or less	0.25 or less / 0.1 or less
		DS-14 Type	1.0 or less	0.55 or less	0.3 or less / 0.13 or less
Leakage allowance	Nil (Confirm at pressure gauge.)				Steam, water & oils: Nil (Confirm at pressure gauge) Air:25mL/min (standard condition) or less
Rated voltage	**AC100V 50/60Hz**	**AC200V 50/60Hz**	AC100V 50/60Hz or AC200V 50/60Hz		Common use: AC100V/200V 50/60Hz, AC110/220V 60Hz
Insulation	Class B		Class H		
Ambient temperature	5~50℃				5~60℃
Protection	Dust & drip proof (When used outdoors, also use TB-03 Type terminal box, as rain proof type*4.)				
End connection	Screwed JIS Rc				
Materials	Body(Stainless steel) Trim(Stainless steel & Synthetic rubber)		Body(Stainless steel) Trim(Stainless steel with Teflon tip)		Body(Stainless steel) Trim(Stainless steel with Teflon tip)
Installation	Can be installed on both horizontal and vertical piping at any angle between the vertical (When the coil part is placed above) and horizontal.*5.				
Valve body pressure test	Hydraulic 2.0MPa				

＊1. Refer to Page 244 for method of wiring.
＊2. If there is any regulation for fuel gases or diesel oil, confirm body material according to the regulation.
＊3. For hot water :Max.100°C
＊4. DS-14 Type is splash-proof type.
＊5. If there is risk of water splashing, please install the product on horizontal pipe uprightly.
＊6. For valve size selection See Page 235.

DIMENSIONS

(mm)

Size	d	L	G	H		Cv value				Mass (kg)
				DS-13 Type DS-13H Type	DS-14 Type	Orifice 4	5.5	7	10	
8(¼″)	¼″	50	12	84	82	0.45	0.75	1.1	—	0.55(0.65)
10(⅜″)	⅜″	50	12	84	82	0.45	0.75	1.1	1.7	0.55(0.65)
15(½″)	½″	56	14	87	85	0.45	0.85	1.3	2.1	0.6 (0.7)
20(¾″)	¾″	63	16.5	88	86	0.45	0.85	1.3	2.2	0.65(0.75)

＊Figures in ( ) are for DS-14 Type.

CONSTRUCTION

DS-13,13H Type

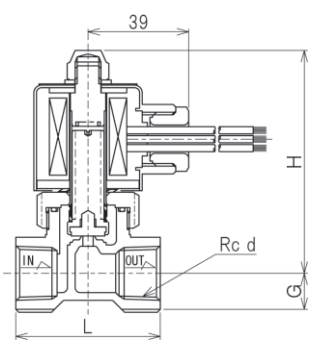

DS-14 Type

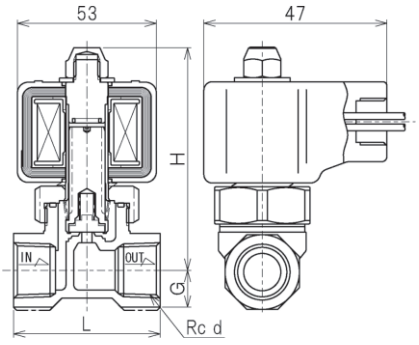

The structure of DS-13H Type is slightly different from shown in the above drawing.

CURRENT VALUES

(A)

Voltage \ Model		DS-13 DS-13H	DS-14
AC100V	Rated	0.19	0.20
	Starting	0.57	0.60
AC200V	Rated	0.10	0.10
	Starting	0.29	0.30

DATA/DS-10, 10H, 12 Type Solenoid Valve (for Water, Air, or Steam)

SIZE (ORIFICE SIZE) SELECTION CHART (for Water)

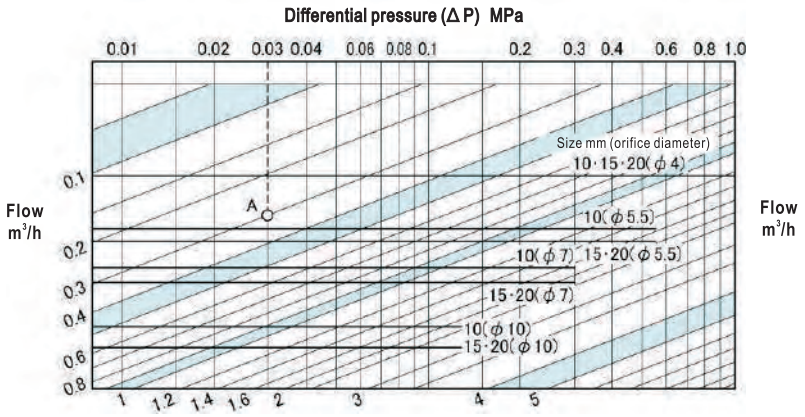

HOW TO USE THE CHART

Example: Determine the size (orifice diameter) of valve meeting the following conditions:
Primary pressure: 0.1MPa
Secondary pressure: 0.07MPa
Flow of water: 0.3m³/h
Differential pressure (ΔP) is: 0.1−0.07=0.03MPa. Identify intersection point (A) of the 0.03MPa differential pressure line and the 0.3m³/h flow line. Since point A is between the 10/15/20mm (orifice diameter Φ4) and 10mm (orifice diameter Φ5.5) size lines, the larger size, which is 10mm (orifice diameter Φ5.5), is selected.

SIZE (ORIFICE SIZE) SELECTION CHART (for Air)

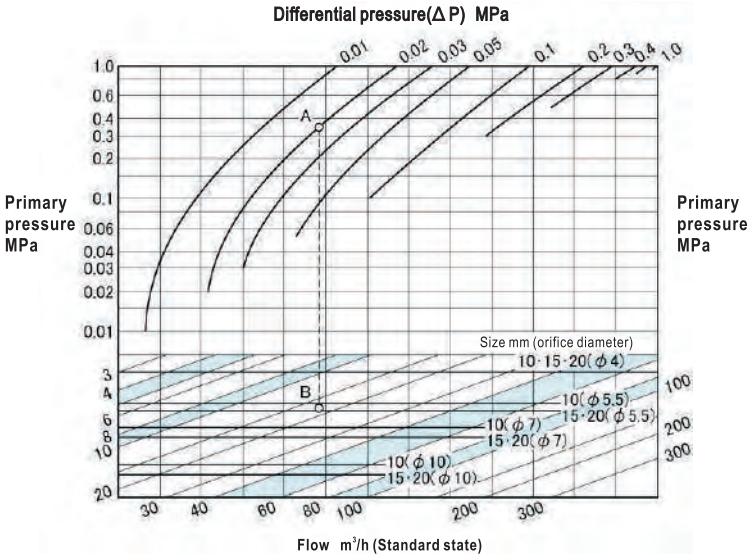

HOW TO USE THE CHART

Example: Determine the size (orifice diameter) of valve meeting the following conditions:
Primary pressure: 0.35MPa
Secondary pressure: 0.33MPa
Flow of air (20℃): 18m³/h (standard state)
Differential pressure (ΔP) is: 0.35−0.33=0.02MPa. Identify the intersection point (A) of the 0.35MPa primary pressure line and the 0.02MPa differential pressure curve. Draw a vertical line from point A until it intersects with 18m³/h flow line. The intersection point is named B. Since point B is between the 10mm (orifice diameter Φ5.5) and 15/20mm (orifice diameter Φ5.5) size lines, the larger size, which is 15mm (orifice diameter Φ5.5) or 20mm (orifice diameter Φ5.5), is selected.

SIZE (ORIFICE SIZE) SELECTION CHART (for Steam)

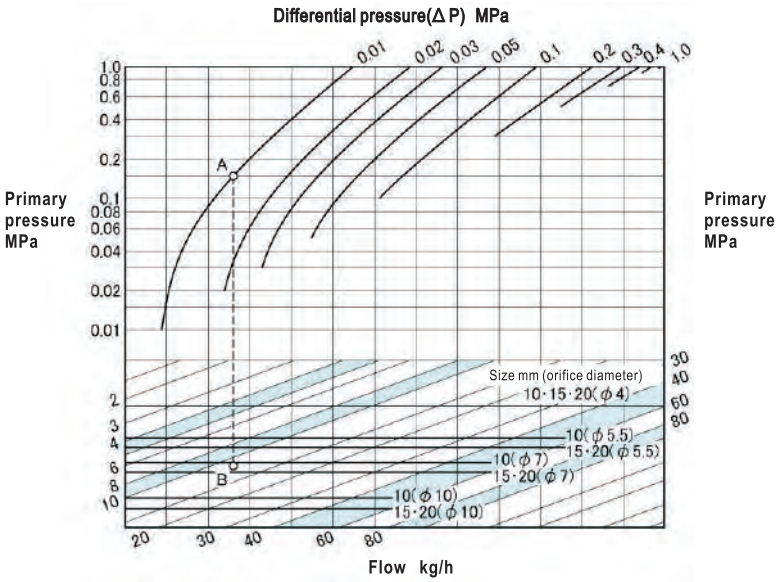

HOW TO USE THE CHART

Example: Determine the size of valve meeting the following conditions:
Primary pressure: 0.15MPa
Secondary pressure: 0.14MPa
Flow of steam (saturated): 11.5kg/h
Differential pressure (ΔP) is: 0.15−0.14=0.01MPa. Identify the intersection point (A) of the 0.15MPa primary pressure line and the 0.01MPa differential pressure curve. Draw a vertical line from point A until it intersects with 11.5kg/h flow line. The intersection point is named B. Since point B is between the 10mm (orifice diameter Φ7) and 15/20mm (orifice diameter Φ7) size lines, the larger size, which is 15mm (orifice diameter Φ7) or 20mm (orifice diameter Φ7), is selected.

DATA/DS-13, 13H, 14 Type Solenoid Valve (for Water, Air, or Steam)

SIZE (ORIFICE SIZE) SELECTION CHART (for Water)

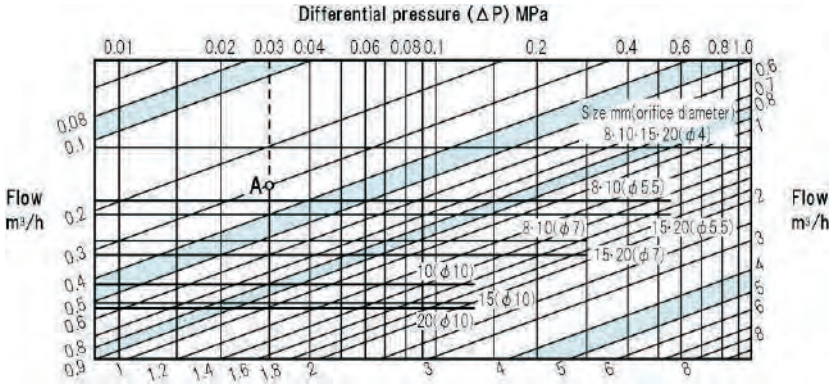

● HOW TO USE THE CHART

Example: Determine the size (orifice diameter) of valve meeting the following conditions:
Primary pressure: 0.1MPa
Secondary pressure: 0.07MPa
Flow of water: 0.3m³/h
Pressure differential (ΔP) is: 0.1-0.07=0.03MPa. Identify intersection point (A) of the 0.03MPa differential pressure line and the 0.3m³/h flow line. Since point A is between the 8/10/15/20mm (orifice diameter Φ4) and 8/10mm (orifice diameter Φ5.5) size lines, the larger size, which is 10mm (orifice diameter Φ5.5), is selected.

SIZE (ORIFICE SIZE) SELECTION CHART (for Air)

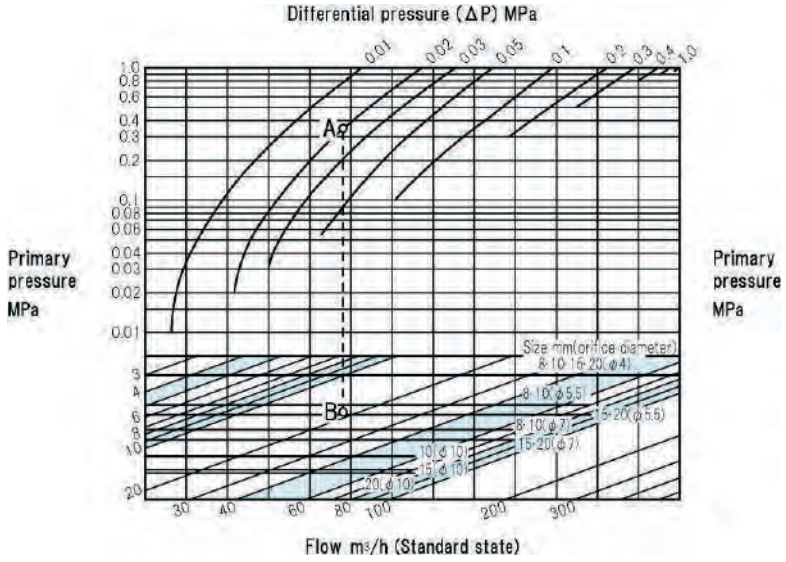

● HOW TO USE THE CHART

Example: Determine the size (orifice diameter) of valve meeting the following conditions:
Primary pressure: 0.35MPa
Secondary pressure: 0.33MPa
Flow of air (20℃): 18m³/h (standard state)
Differential pressure (ΔP) is: 0.35-0.33=0.02MPa. Identify the intersection point (A) of the 0.35MPa primary pressure line and the 0.02MPa differential pressure curve. Draw a vertical line from point A until it intersects with 18m³/h flow line. The intersection point is named B. Since point B is between the 8/10mm (orifice diameter Φ5.5) and 15/20mm (orifice diameter Φ5.5) size lines, the larger size, which is 15mm (orifice diameter Φ5.5) or 20mm (orifice diameter Φ5.5), is selected.

SIZE (ORIFICE SIZE) SELECTION CHART (for Steam)

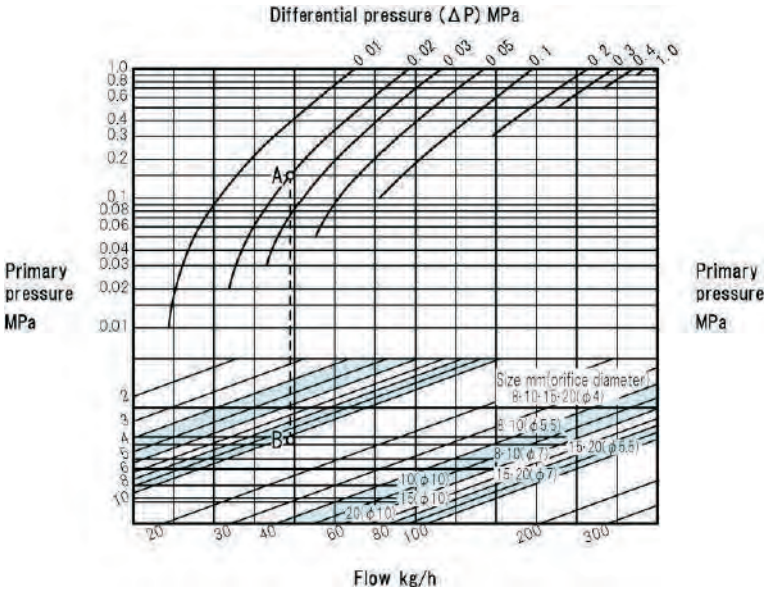

● HOW TO USE THE CHART

Example: Determine the size of valve meeting the following conditions:
Primary pressure: 0.15MPa
Secondary pressure: 0.14MPa
Flow of steam (saturated): 11.5kg/h
Differential pressure (ΔP) is: 0.15-0.14=0.01MPa. Identify the intersection point (A) of the 0.15MPa primary pressure line and the 0.01MPa differential pressure curve. Draw a vertical line from point A until it intersects with 11.5kg/h flow line. The intersection point is named B. Since point B is between the 8/10mm (orifice diameter Φ7) and 15/20mm (orifice diameter Φ7) size lines, the larger size, which is 15mm (orifice diameter Φ7) or 20mm (orifice diameter Φ7), is selected.

ED-S, F Type Solenoid Valve (for Liquids or Gases)

ED-S Type screw connection and ED-F Type flange connection valves use powerful 2-way electromagnet to open or close valve. They are semi-direct acting valves suitable for fluid with high viscosity or low pressure.



ED-S Type



ED-F Type

SPECIFICATIONS

Operation		Energized open					
Model name		ED-S		ED-F			
Type		Metal disc	With Teflon-disc	Metal disc	With Teflon-disc	Metal disc	With Teflon-disc
Code name		EDS-J	EDS-W	EDF-J	EDF-W	EDF-B	EDF-R*4.
Size		10~50(⅜″~2″)		15~50(½″~2″)		65・80(2½″・3″)	
Applicable fluid		Metal touch:Water & oils*3., With Teflon-disc:Diesel oil*4., kerosene, gasoline*4. & inert gases					
Fluid temperature		5~100℃					
Fluid viscosity		100cSt or less*5.					
Applicable pressure		0~0.7MPa					
Min. pressure differential across the disc		0MPa					
Leakage allowance		Water & oils:3g/min or less, Air(With Teflon-disc):50mL/min(standard state) or less					
Rated voltage		AC100V 50/60Hz or AC200V 50/60Hz*6.					
Insulation		Class B					
Ambient temperature		5~40℃					
Protection		Dust & drip proof (When using the solenoid valve outdoors, protect it with a cover, etc.)					
End connection		Screwed JIS Rc		Flanged JIS 10KFF			
Materials	Body	Cast bronze*2.*7.		Cast bronze*2.*8.		Cast iron*2.*8.	
	Trim	Disc:Stainless steel or with Teflon tip				Disc:Cast bronze or with Teflon tip	
Valve body pressure test		Hydraulic 2.0MPa					

* 1. Refer to Page 244 for method of wiring.
* 2.If there is any regulation for fuel oils or diesel oil, confirm body material according to the regulation.
* 3. Products for steam are also available.
* 4. Code name: EDF-R is applicable to kerosene and gas.
* 5. Fluid viscosity Max. 300cSt is also available upon your request.
* 6. For products suitable for special voltage, please contact our agent in your area.
* 7. For products with stainless steel body, please contact our agent in your area.
* 8. For products with cast steel/stainless steel body, please contact our agent in your area.

DIMENSIONS(ED-S Type)

(mm)

Size	d	L	G	H	Port size	Cv value	Mass(kg)
10(⅜″)	⅜″	63	63	193	13	1.5	2.4
15(½″)	½″	63	63	193	13	3	2.4
20(¾″)	¾″	80	60	198	18	5	2.6
25(1″)	1″	90	65	202	23	8.5	2.9
32(1¼″)	1¼″	106	85	209	27	12.5	3.6
40(1½″)	1½″	118	97	215	34	20	4.7
50(2″)	2″	140	109	225	44	30	6.9

DIMENSIONS (ED-F Type)

(mm)

Size	L	G	H	Port size	Cv value	Mass(kg)
15(½″)	100	63	193	13	3	4.2
20(¾″)	106	60	198	18	5	4.9
25(1″)	112	65	202	23	8.5	6.3
32(1¼″)	150	85	209	27	12.5	7.9
40(1½″)	160	97	215	34	20	9.3
50(2″)	170	109	225	44	30	12.5
65(2½″)	270	120	289	65	36	35
80(3″)	290	140	308	80	43	48

Flange code JIS 10KFF

CURRENT VALUES

(A)

Voltage		50Hz	60Hz
AC100V	Rated	0.68	0.78
	Starting	8.00	9.20
AC200V	Rated	0.34	0.39
	Starting	4.00	4.60

CONSTRUCTION (AC power)

ED-S Type

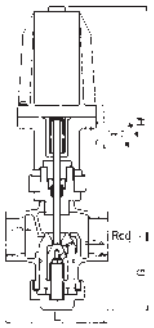

Teflon disc structure

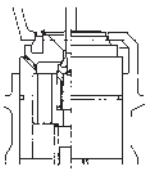

Depending on size, the structure may vary.

ED-F Type

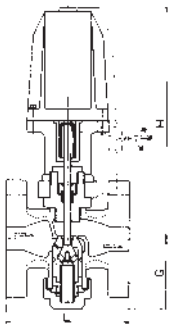

SIZE SELECTION CHART (for Liquids)

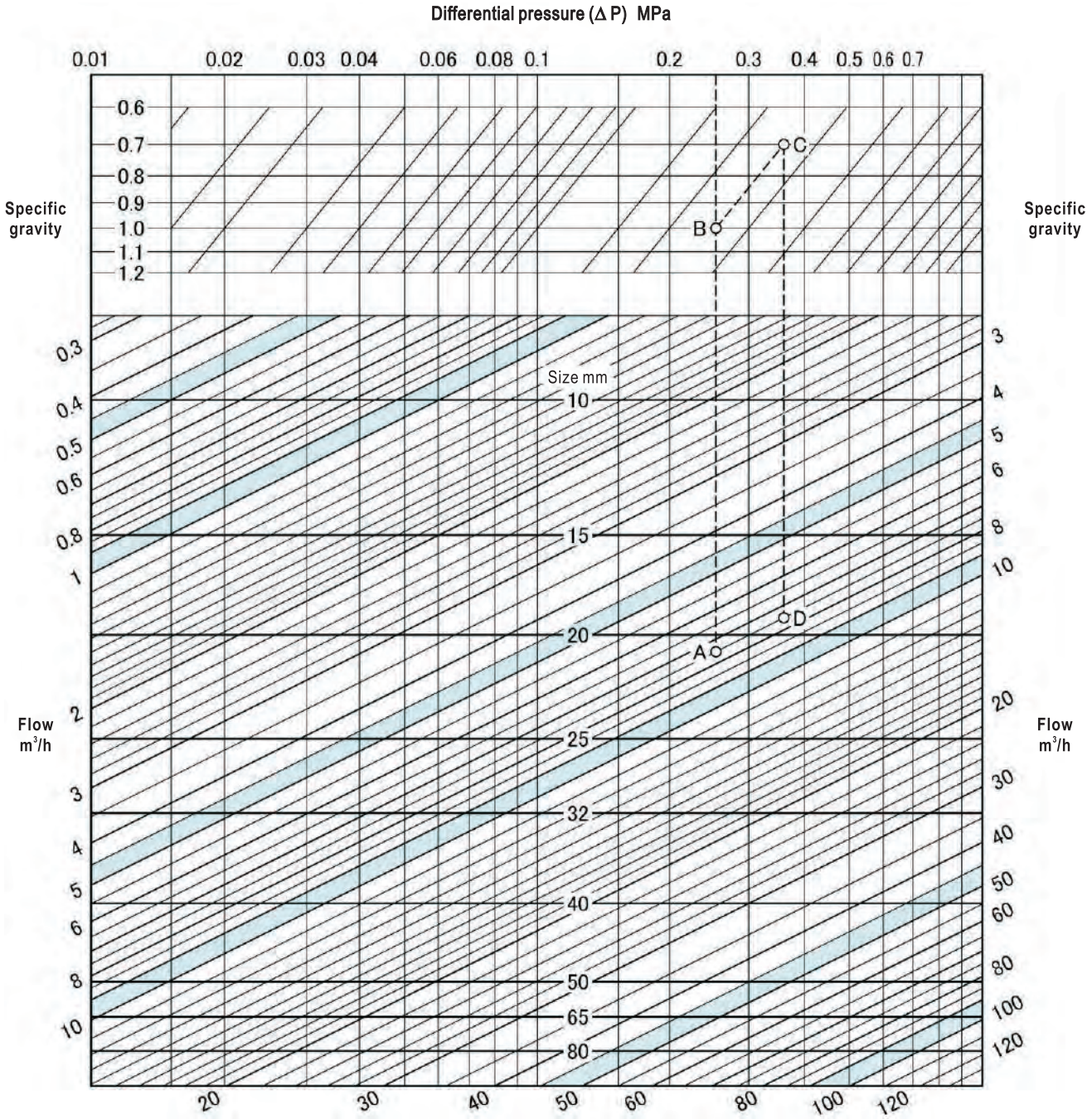

● HOW TO USE THE CHART

Example: Find out the nominal diameter meeting the following conditions: Primary pressure: 0.5MPa, Secondary pressure: 0.25MPa, Specific gravity: 1 (water), Flow: 7.5m³/h.

Differential pressure (ΔP) MPa: 0.5−0.25=0.25MPa. Find out the intersection point A between the 0.25MPa differential pressure (ΔP) line and the 7.5m³/h flow line.

Since point A is between the lines representing nominal diameter 20mm and 25mm, the nominal diameter should be the larger one, i.e., 25mm.
In the case other conditions remain the same but the specific gravity is 0.7, find out the intersection point B between the 0.25MPa differential pressure (ΔP) line and the 1.0 specific gravity line. Move from point B on the 0.7 specific gravity line parallelly to reach point C. Now draw a vertical line from point C until it intersects with the 7.5m³/h flow line. The intersection point is named D. Since point D is located between the lines representing nominal diameter 15mm and 20mm, the nominal diameter should be the larger one, i.e., 20mm.

SIZE SELECTION CHART (for Air)

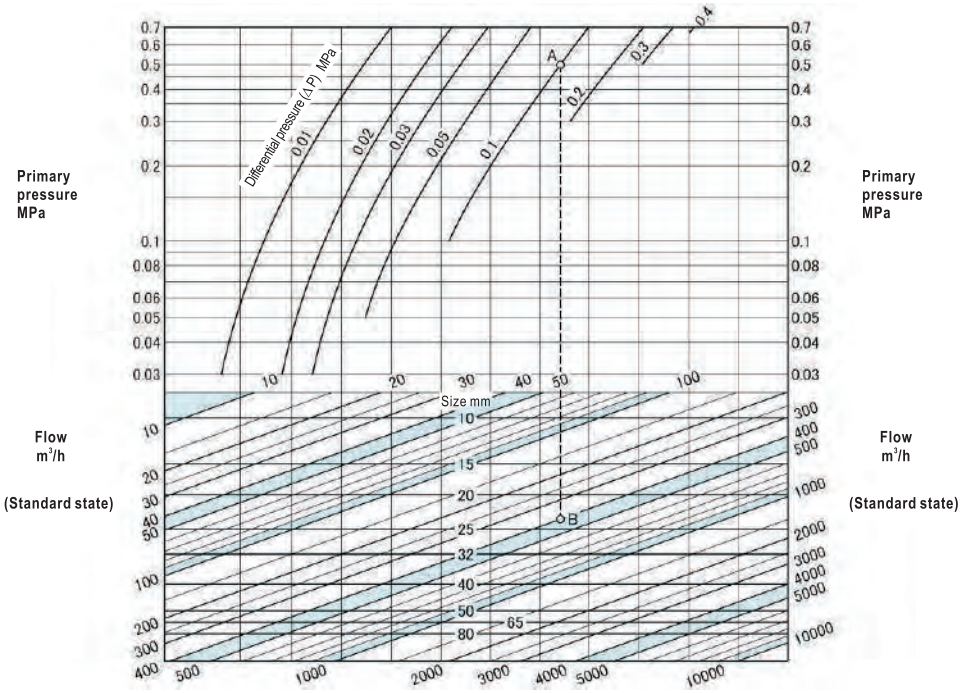

● HOW TO USE THE CHART

Example: Determine the size of valve meeting the following conditions:
Primary pressure: 0.5MPa
Differential pressure (ΔP): 0.1MPa
Flow of air (20℃): 400m³/h (standard state)
Identify the intersection point (A) of the 0.5MPa primary pressure line and the 0.1MPa differential pressure curve. Draw a vertical line from point A until it intersects with 400m³/h flow line. The intersection point is named B. Since point B is between the 20mm and 25mm size lines, the larger size, which is 25mm, is selected.

WSE-18, 18A Type Pressure Resistance and Explosion Proof Solenoid Valve

d2G4 pressure resistant and explosion proof structure
Diaphragm type

With water hammer relaxation mechanism unit and diaphragm, WSE-18, 18A Type is suitable for water lines or gas lines where there is risk of explosion due to explosive gas.

FEATURES

- Suitable for dangerous places with risk of explosion.
- Manual operating unit allows test run and manual operation at times of power failures.
- Easy installation and wiring by changing the direction of screw for cable tube.

SPECIFICATIONS

Operation	Energized open		
Type	Straight		Angle
Model name	WSE-18		WSE-18A
Code name	WSE18-F1	WSE18-F2	WSE18A-F
Applicable fluid	Water, air & inert gases		
Fluid temperature	5~60℃		
Applicable pressure	0.02~1.0MPa		
Min. pressure differential across the disc	0.02MPa		
Leakage allowance	Nil (Confirm at pressure gauge)		
Rated voltage	AC100/110V 50/60Hz	AC200/220V 50/60Hz	AC100/110V 50/60Hz or AC200/220V 50/60Hz
Insulation	Class H (Epoxy mold)		
Ambient temperature	5~50℃		
Protection	Pressure resistance and explosion proof d2G4		
End connection	Screwed JIS Rc		Screwed JIS R
Materials	Body(Cast bronze), Diaphragm(Synthetic rubber)		
Installation	Install the valve vertically in horizontal piping placing coil part above.		
Valve body pressure test	Hydraulic 2.0MPa		

CURRENT VALUES

(A)

Voltage		AC100V		AC110V		AC200V		AC220V	
		50Hz	60Hz	50Hz	60Hz	50Hz	60Hz	50Hz	60Hz
Current value	Rated	0.16	0.13	0.19	0.15	0.08	0.07	0.08	0.08
	Starting	0.27	0.25	0.30	0.25	0.14	0.13	0.15	0.13

DIMENSIONS(WSE-18 Type)

(mm)

Size	d	L	H	G	A	B	Port size	Cv value	Mass(kg)
15(½″)	½″	110	147	16	27	106	18	4.5	2
20(¾″)	¾″	110	147	16	27	106	18	5	2
25(1″)	1″	120	152	21	30	111	23	9	2.2
32(1¼″)	1¼″	135	157	25	35	116	28	11	2.9
40(1½″)	1½″	145	164	29	38	123	32	17	3.2
50(2″)	2″	170	172	35	46	131	40	23	4.1

DIMENSIONS(WSE-18A Type)

(mm)

Size	d	L	L1	H	A	B	Port size	Cv value	Mass(kg)
15(½″)	½″	65	40	142	27	101	18	4.5	1.9
20(¾″)	¾″	65	40	142	27	101	18	5	1.9
25(1″)	1″	71	40	145	30	104	23	9	2.1
32(1¼″)	1¼″	88	50	150	35	109	28	11	2.8
40(1½″)	1½″	95	53	156	38	115	32	17	3.2
50(2″)	2″	101	57	162	46	121	40	23	4.1



WSE-18 Type



WSE-18A Type

CONSTRUCTION

WSE-18 Type

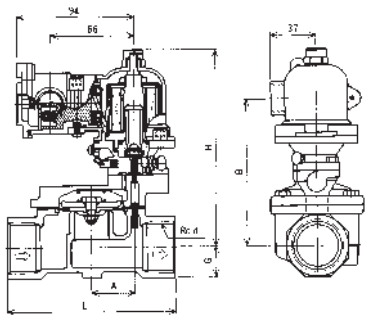

WSE-18A Type

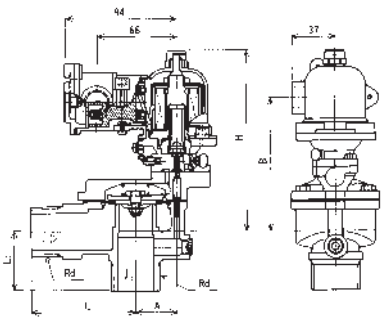

PSE-18, 18A Type Pressure Resistance and Explosion Proof Solenoid Valve

d2G4 pressure resistant and explosion proof structure
Piston type

PSE-18,18A Type is suitable where there is risk of explosion due to explosivegas.
Pilot-operating, durable, piston type solenoid valve suitable for oil.

FEATURES

- Suitable for dangerous places with risk of explosion.
- Manual operating unit allows test run and manual operation at times of power failures.
- Easy installation and wiring by changing the direction of screw for cable tube.

SPECIFICATIONS

Operation	Energized open		
Type	Straight		Angle
Model name	PSE-18		PSE-18A
Code name	PSE18-J1	PSE18-J2	PSE18A-J
Applicable fluid	Oils(Kerosene, diesel oil level)*, inert gases, air & water		
Fluid temperature	5~60℃		
Fluid viscosity	50cSt or less		
Applicable pressure	0.02~1.0MPa		
Min. pressure differential across the disc	0.02MPa		
Leakage allowance	Nil (Confirm at pressure gauge)		
Rated voltage	AC100/110V 50/60Hz	AC200/220V 50/60Hz	AC100/110V 50/60Hz or AC200/220V 50/60Hz
Insulation	Class H (Epoxy mold)		
Ambient temperature	5~50℃		
Protection	Pressure resistance and explosion proof d2G4		
End connection	Screwed JIS Rc		Screwed JIS R
Materials	Body(Cast bronze), Disc(Stainless steel with Synthetic rubber)		
Installation	Install the valve vertically in horizontal piping placing coil part above.		
Valve body pressure test	Hydraulic 2.0MPa		

* If there is any regulation for fuel oils or diesel oil, confirm the body material according to the regulation.

CURRENT VALUES

(A)

Voltage		AC100V		AC110V		AC200V		AC220V	
		50Hz	60Hz	50Hz	60Hz	50Hz	60Hz	50Hz	60Hz
Current value	Rated	0.16	0.13	0.19	0.15	0.08	0.07	0.08	0.08
	Starting	0.27	0.25	0.30	0.25	0.14	0.13	0.15	0.13

DIMENSIONS (PSE-18 Type)

(mm)

Size	d	L	H	G	A	B	Port size	Cv value	Mass(kg)
15(½″)	½″	110	166	16	27	125	18	5	2.2
20(¾″)	¾″	110	166	16	27	125	18	6	2.2
25(1″)	1″	120	171	21	30	130	23	11	2.4
32(1¼″)	1¼″	135	180	25	35	139	28	15	3.3
40(1½″)	1½″	145	187	29	38	146	32	20	3.9
50(2″)	2″	170	199	35	46	158	40	27	5.4

DIMENSIONS (PSE-18A Type)

(mm)

Size	d	L	L_1	H	A	B	Port size	Cv value	Mass(kg)
15(½″)	½″	65	40	161	27	120	18	5	2.1
20(¾″)	¾″	65	40	161	27	120	18	6	2.1
25(1″)	1″	71	40	164	30	123	23	11	2.3
32(1¼″)	1¼″	88	50	173	35	132	28	15	3.2
40(1½″)	1½″	95	53	179	38	138	32	20	3.8
50(2″)	2″	101	57	189	46	148	40	27	5

CONSTRUCTION

PSE-18 Type

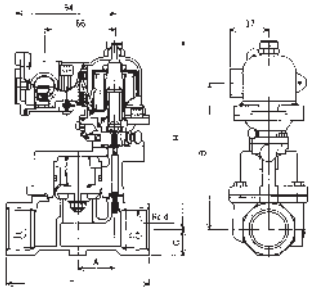

PSE-18A Type

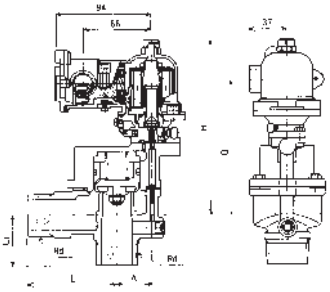



PSE-18



PSE-18A

DATA/WSE, PSE Type Pressure Resistance and Explosion Proof Solenoid Valve

■ PRESSURE RESISTANT AND EXPLOSION PROOF SOLENOID PART

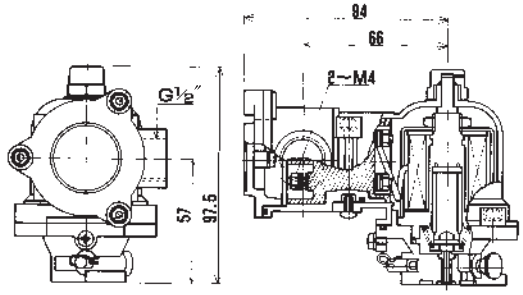

■ PRESSURE RESISTANT GLAND PACKING (TG Type optional item)

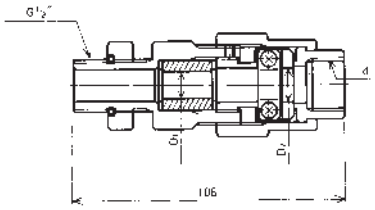

■ DIMENSIONS

(mm)

Compellation	Size	d	D_1	D_2	Diameter of outside conductor
TG Type P2	16×16	G½″	10.5	13	9-10.5
TG Type P3	16×22	G¾″	11	14	10-11
TG Type P5	16×22	G¾″	13	14	11-12

■ CONNECTING EXTERNAL LEAD AND TERMINAL BOX

1. Conduit tube pressure resistant screw connection

Fix the conduit tube using screw at the leading-in part of the wire. The wire should be insulating wire.

As for the connection between conduit tube and terminal box, use parallel screw for conduit as specified in JIS B0202, and screw in effective part of the screw for at least 5 threads, then fix the conduit tube as tightly as possible using lock nut.

Note: Install sealing fitting for the part 45cm from the leading-in part.

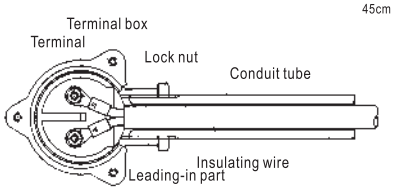

2. Pressure resistant packing connection

Apply packing on the leading-in part of external wire and cable on the wire. Put TG pressure resistant gland packing on the leading-in part of wire, screw in the effective part of the screw for at least 5 threads, fix as tightly as possible using a lock nut, and then tighten the pressure resistant packing to fix the cable.

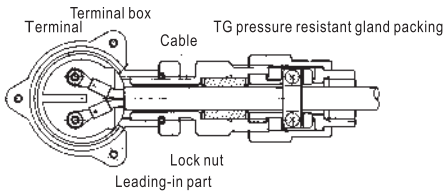

REFERENCE: ABOUT EXPLOSION PREVENTION

The Occupational Health and Safety Law and relevant regulations in Japan require utilization of electric equipments/tools that are explosion proof in places where there is risk of explosion.

■ EXPLOSION PROOF MARK OF WSE, PSE SERIES SOLENOID VALVE

d 2 G4

- G4 — Ignition temperature: G4
- 2 — Explosion degree: 2
- d — Type of explosion proof structure: d=pressure resistant and explosion proof structure

Pressure resistant and explosion proof structure:

A fully airtight structure that can bear the pressure generated by explosion of gas inside the structure and cannot be ignited by explosive gas from outside of the structure.

■ TABLE FOR EXAMPLE OF CLASSIFICATION FOR EXPLOSION CLASS, IGNITION LEVEL AND FUEL GASES.

Explosion degree \ Ignition level (B \ A)	G1 Over 450℃	G2 300~450℃	G3 200~300℃	G4 135~200℃	G5 100~135℃	G6 85~100℃
1 — Over 0.6mm	Acetone, Ammonia, Carbon monoxide, Ethane, Acetic acid, Ethyl acetate, Toluene, Propane, Benzene, Methanol, Methane	Ethanol Isopentyl acetate 1-Butanol Butane Acetic anhydride	Gasoline Hexane	Acetaldehyde Ethyl ether		
2 — 0.4~0.6mm	Coal gas	Ethylene Ethylene oxide				
3 — 0.4mm or less	Water gas, Hydrogen	Acetylene			Carbon disulfide	

A: Ignition temperature B: Minimum spacing (at depth 25) allowing transmission of flame □: The range of application of WSE, PSE Type series.

■ HAZARDOUS AREA CLASSIFICATION AND LOCATIONS FOR UTILIZATION OF PRESSURE RESISTANT AND EXPLOSION PROOF SOLENOID VALVE

Hazardous area: An area, such as a factory workshop, where large amount of explosive gas is mixed with air and forms a hazardous atmosphere and there is risk of explosion. According to the period and frequency of existence of hazardous atmosphere, hazardous areas can be divided into three categories:

Category 0 area: Under normal conditions, hazardous atmosphere exists continuously or a long period.

Category 1 area: Under normal conditions, there is risk of formation of hazardous atmosphere.

Category 2 area: Under abnormal conditions, there is risk of formation of hazardous atmosphere.

Pressure resistance and explosion proof solenoid valve is suitable for applications in the dangerous places of Category 1 area and 2 area.

TPS-22, TPF-22 Type Temperature Regulating Solenoid Valve (for Steam or Hot Water)

For on/off control
SSS&AAS Used※
※ Contact-free swinging mechanism (AAS※2) with special shape spring (SSS※1).
※1. Special Shape Spring ※2. Anti Abrasion System

A combination of electric temperature regulator and solenoid valve, with no need for selecting temperature regulator and connecting solenoid valve. For temperature regulating, connect the temperature sensor, which is attached to the valve, and switch the knob to set temperature.
Face-to-face dimensions are the same as TPS-12 and TPF-12 Types.



TPS-22 Type
(Size 10~25mm)

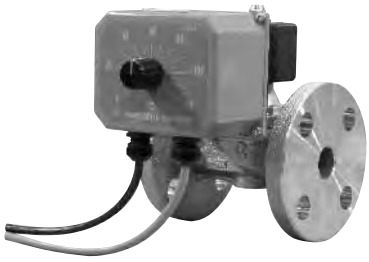

TPF-22 Type
(Size 15~25mm)

[Temperature regulating unit]

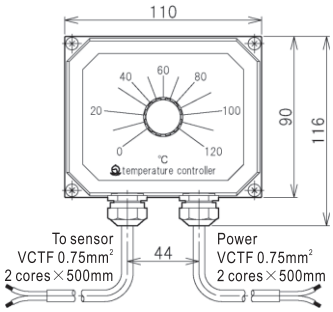

[Temperature measuring resistance (sensor)]

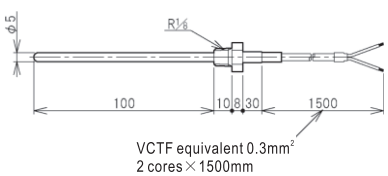

FEATURES

- A combination of electric temperature regulator and solenoid valve, with no need for selecting temperature regulator and valve.
- Temperature regulating knob.
- Compact, saving space.

SPECIFICATIONS

Solenoid valve body	Use	Heating*1.	
	Operation	ON/OFF(Energized open)	
	Model name	TPS-22	TPF-22
	Code name	**TPS22-W**	**TPF22-W**
	Size	10~50(⅜″~2″)	15~50(½″~2″)
	Applicable fluid	Steam & hot water	
	Fluid temperature	5~170℃(For hot water:Max. 100℃)	
	Applicable pressure	0~0.7MPa	
	Min. pressure differential across the disc	0MPa	
	Leakage allowance	Nil (Confirm at pressure gauge)	
	Rated voltage	AC100V 50/60Hz, AC110V 60Hz or AC200V 50/60Hz, AC220V 60Hz	
	Insulation	Class H	
	Ambient temperature	5~55℃	
	Protection	Dust proof(Indoor use)	
	End connection	Screwed JIS Rc	Flanged JIS 10KFF
	Materials	Body(Cast bronze), Disc(Brass with Teflon tip)	
	Installation	Install the valve vertically in horizontal piping placing coil part above.	
	Valve body pressure test	Hydraulic 2.0MPa	
Temperature controller	Input	Resistance temperature detector (RTD):Pt 500 (With leads of 1.5m for indoor use)*2.*3.	
	Control type	Two-position	
	Temperature setting range	0~120℃	
	Rated electric capacity	2VA	

* 1. The solenoid valve for cooling (applicable fluid: Water) is also available upon your request. (Code name: TPS22-WA, TPF22-WA)
* 2. The length of leads connected to the RTD can be extended up to 10m using commercially available.
* 3. The RTD is for indoor applications. Please contact our local agent for other types of RTD.

CURRENT VALUES

(A)

Size(mm)	10	15	20	25	32	40	50
AC100V Rated(Starting)	0.21(0.70)		0.30(1.25)		0.42(1.62)		
AC200V Rated(Starting)	0.10(0.35)		0.15(0.63)		0.18(0.80)		

DIMENSIONS (TPS-22 Type)

(mm)

Size	d	L	G	H	B	Port size	Cv value	Mass(kg)
10(⅜″)	⅜″	63	15	102	172	18	3	2
15(½″)	½″	63	15	102	172	18	4	2
20(¾″)	¾″	80	18	115	174	23	6	2.3
25(1″)	1″	90	22	120	174	28	10	2.8
32(1¼″)	1¼″	106	27	150	171	32	18	3.9
40(1½″)	1½″	118	30	153	171	40	23	4.8
50(2″)	2″	140	37	165	171	48	35	6.2

DIMENSIONS (TPF-22 Type)

(mm)

Size	L	G	H	B	Port size	Cv value	Mass(kg)
15(½″)	112	21	102	172	18	4	3.5
20(¾″)	118	24	115	174	23	6	4.3
25(1″)	140	27	120	174	28	10	6.1
32(1¼″)	150	32	150	171	32	18	7.9
40(1½″)	160	35	153	171	40	23	9.2
50(2″)	190	41	165	171	48	35	11.5

Flange code JIS 10KFF

CONSTRUCTION

TPS-22 Type

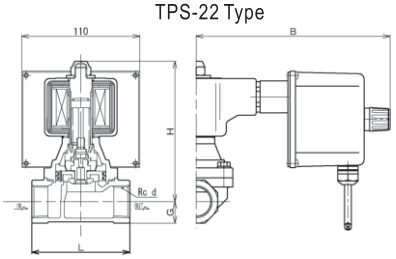

TPF-22 Type

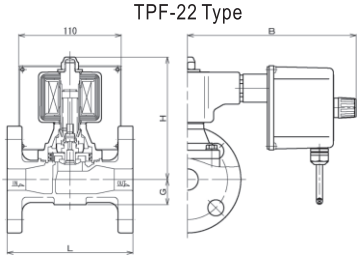

Note: Depending on size, the structure may vary.

DATA/TPS-22, TPF-22 Type Temperature Regulating Solenoid Valve (for Steam or Hot Water)

SIZE SELECTION CHART (for Steam)

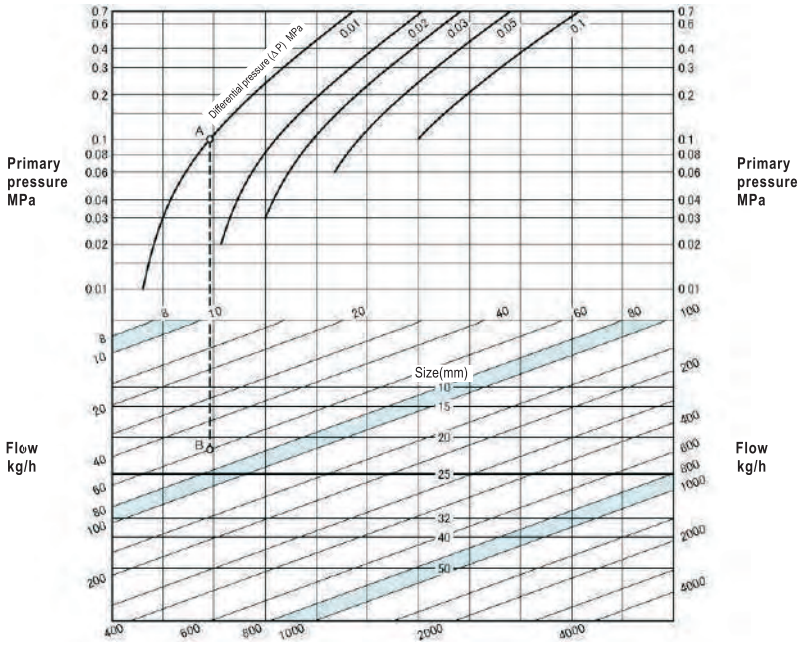

● HOW TO USE THE CHART

Example: Determine the size of valve meeting the following conditions:
Primary pressure:0.1 MPa
Differential pressure: 0.01MPa
Flow of steam (saturated): 60kg/h
Identify intersection point (A) of the 0.1MPa primary pressure line and the 0.01MPa differential pressure curve.

Draw a vertical line from point A until it intersects with the 60kg/h flow line. The intersection point is named B. Since point B is between the 20mm and 25mm size lines, the larger size, which is 25mm, is selected.

SIZE SELECTION CHART (for Hot water)

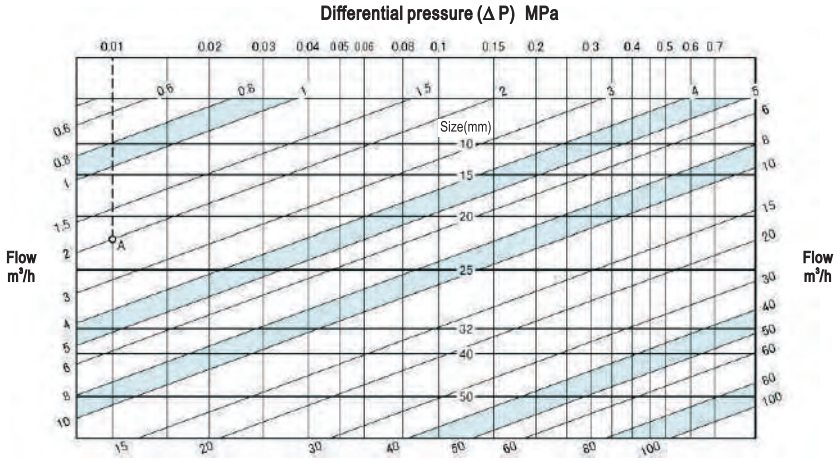

● HOW TO USE THE CHART

Example: Determine the size of valve meeting the following conditions:
Primary pressure: 0.3MPa
Secondary pressure: 0.29MPa
Flow of water: 2m^3/h
Differential pressure (ΔP):0.3−0.29=0.01MPa.
Find out the intersection point A between the 0.01MPa differential pressure (ΔP) line and the 2m^3/h flow line.

Since point A is between the lines representing nominal diameter 20mm and 25mm, the nominal diameter should be the larger one, i.e., 25mm.

■ PIPING EXAMPLE

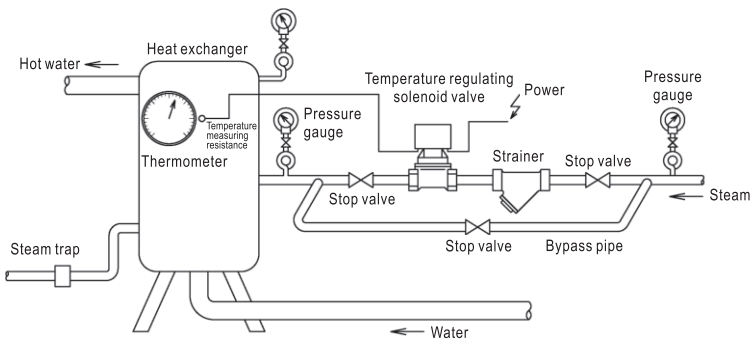

Note:Install a safety valve if there is risk of temperature increase due to thermal expansion for heat exchanger.

■ TEMPERATURE SETTING

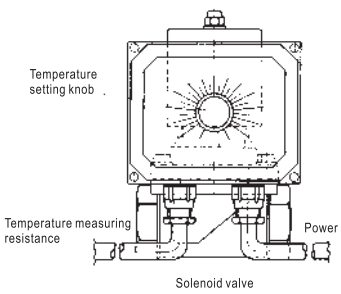

Adjust the knob to desired temperature.

DATA/Solenoid Valve

METHOD FOR CONNECTION OF COIL

As shown in relevant specification table, different models of solenoid valves have different rated voltages.
When connecting to power, make sure the voltage does not exceed the rated voltage of solenoid valve.

<Common voltage coil>
- Connect the 4 lead wires (in different colors) to power source.

<Exclusive/Special voltage coil>
- Connect 2 lead wires to power source.

<Frequency selecting coil>
- There are 3 lead wires on coil. Read the connection method shown on product before connecting to power source.
  The lead wire left unused should be insulated by using insulating tape.

AC100/110V

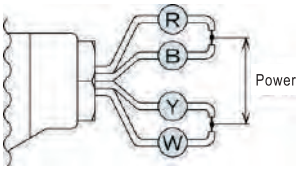

Connect R and B wires, then Y and W wires, before connecting them to power source.

AC200/220V

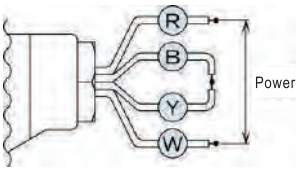

Connect and then insulate Y and B wires. Connect the R and W wires to power source.

W : White
Y : Yellow
B : Black
R : Red

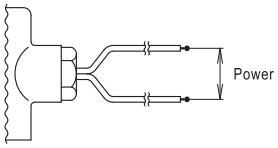

DS-10, 10H, 12, 13,13H Type

AC 100V

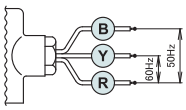

AC200V

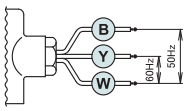

ED-S, F Type

AC 100V

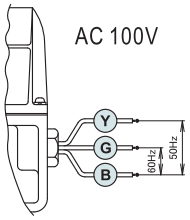

AC200V

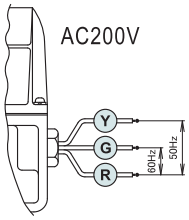

W : White
Y : Yellow
B : Black or blue
R : Red
G:Grey

REFERENCE: ABOUT EXPLOSION PREVENTION

Terminal box specially designed for solenoid valve. Can be screwed in with lead wire of solenoid valve and protect power cable and lead wire from being exposed to rain or dust.
TB-03 series are for outdoor cables and conduit.



An example of TB-03 installation

TB-03 TYPE SERIES (for indoor/outdoor, metal body, rainproof)

(Without indication lamp) Rated power: 250V 15A

●TB-03 Type(standard model)
With gland nut

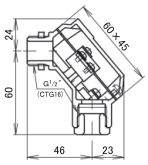

●TB-03C Type
With cap cone

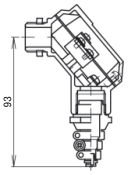

●TB-03F Type
With ship-class gland

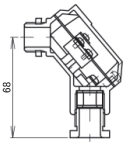

(With indication lamp) Rate power: AC100V or AC200V
Please specify voltage when ordering.

●TB-03L Type
With indication lamp

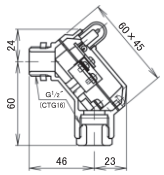

●TB-03LC Type
Lamp + cap cone

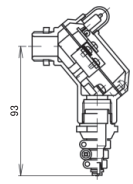

●TB-03LF Type
Lamp + ship-class gland

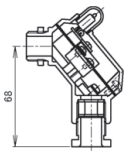

SPECIFICATIONS OF GLAND (TB-03F, 03LF Type)

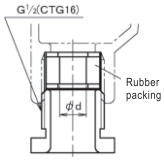

Gland size	d (mm)
15a	9
15b	10
15c	11

SPECIFICATIONS OF CAPCONE PLUG (TB-03C, 03LC Type)

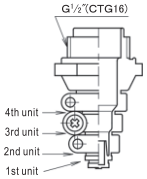

Cut position	Applicable cable diameter(mm)
4th unit	10~12
3rd unit	8~10
2nd unit	6~8
1st unit	4~6

Fig.1 Piping example

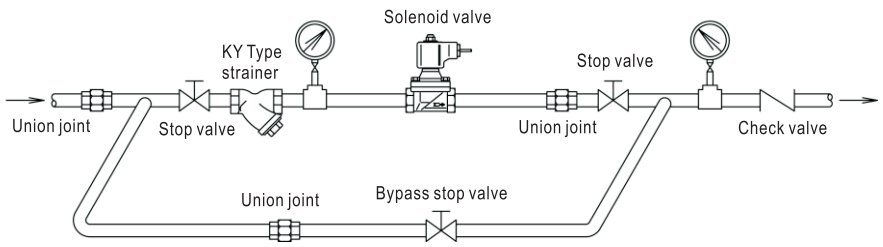

Fig.2 Installation position

Upright to horizontal pipe

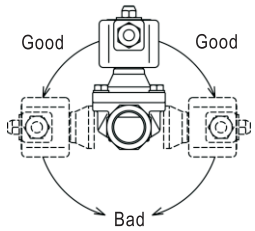

SELECTION AND INSTALLATION

1. Install strainer on the primary side of solenoid valve (see Fig.1).
2. Install a bypass pipe (with stop valve) between the primary and secondary sides of solenoid valve if the operation of equipment cannot be stopped (see Fig.1).
   If you do not intend to install bypass pipe, install blowing stop valve, which is branched from the main pipe, right before the stop valve on the primary side of solenoid valve, to allow flushing.
3. The coil should stand upright above horizontal pipe (see Fig.1, 2).
   For size 50mm (and below) valve of WS, PS series, the coil can be upright above or at the same level of (and perpendicular to) horizontal pipe. In this case, make sure the pressure differential before and after the valve is larger than 0.03MPa (see Fig.2).
4. Back flow may occur when the secondary pressure is larger than the primary pressure. To prevent back flow, install check valve on the secondary side (see Fig. 3).
5. If the valve is used for steam and the secondary pressure is negative pressure when the valve is closed, install vacuum regulating valve (vacuum breaker) on the secondary side of solenoid valve (see Fig.4).
6. Install steam trap on piping if the valve is used for steam.
7. When used for liquid, the pressure inside the piping may increase due to water hammer which occurs when valve is closed or due to the expansion caused by ambient temperature increase. In this case, it is recommended to install relief valve to protect machine (see Fig.5).
8. Connect coil properly using 0.75mm^2 above wire. Install fuse to protect electric circuit.
9. Repeated power-on and power-off for a long period may make the surface temperature rise up to about 70℃. Attentions should be paid to avoid burning. (Depending on conditions and models, the temperature rise varies.)
10. Make sure the arrow mark on solenoid valve match with the direction of flow of fluid.
11. Leave some space for dissembling and maintenance.
12. Fix and support piping properly to prevent solenoid valve from being damaged due to weight of piping, excessively large stress, bending force or vibration.
13. Discharge drain or apply thermal insulation if there is risk of freezing.
    However, the coil should not be applied with any thermal insulation.

Fig.3: Elevated piping at secondary side

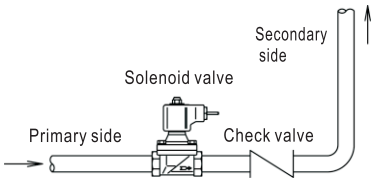

In case of occurrence of backflow, install the check valve.

Fig.4 Steam line application

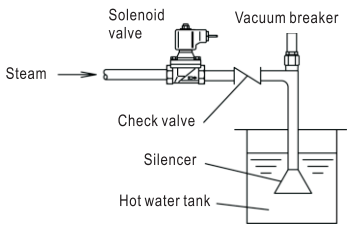

Fig.5 Relief valve installation

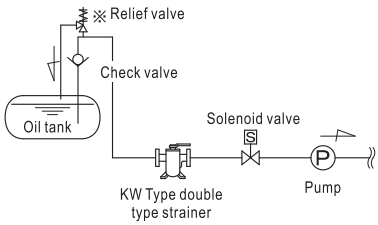

※ Install relief valve if pressure rise due to thermal expansion or other factors is anticipated.

MEMO

EMERGENCY SHUT-OFF VALVES

13

Getting more sophisticated and gigantic, the industrial plants nowadays are obliged to strengthen the systems for security and prevention of casualty.

Restrictive laws are quite severe now.

EBS/ECS, EBF/ECF, EI-FS and EI-FP Types have been developed as safeguards for those equipments and piping systems and play quite important roles as Emergency Shut-Off Valves in case of emergency.

During the operation, the emergency shut-off valves close instantly and surely, and the resumption of operation can only be made manually after safety has been confirmed.

Model name		End connection	Size	Applicable fluid	Applicable pressure(MPa)	Materials	Page
Energized open	Energized close						
EBS-1W	ECS-1W	Screwed	10~50(⅜″~2″)	Water, air or inert gases	0~1.0	Body:Cast bronze Diaphragm:Synthetic rubber	248
EBF-1W	ECS-1W	Flanged	15~50(½″~2″)				
EBS-1P	ECS-1P	Screwed	10~50(⅜″~2″)	Fuel oils or other oils	0~1.0	Body:Cast bronze Disc:Stainless steel with Teflon tip	249
EBF-1P	ECF-1P	Flanged	15~50(½″~2″)				
EI-FS		Flanged	15~200(½″~8″)	Water,steam,oils, fuel oils, fuel gases or air	Max. 1.0	Body:Cast iron Disc & seat:Cast bronze	250
EI-FP			32~200(1¼″~8″)	Water,oils, Fuel oils or air			
EIE-FS		Flanged	15~200(½″~8″)	Water,steam,oils, fuel oils, fuel gases or air	Max. 1.0	Body:Cast iron Disc & seat:Cast bronze	251
EIE-FP			32~200(1¼″~8″)	Water,oils, Fuel oils or air			

EBS/ECS-1W Type, EBF/ECF-1W Type Emergency Shut off Solenoid Valve

Diaphragm type

It can rapidly close and shut off fluid using electrical signal when emergency occurs. To restart, the operator must confirm safety first and then operate the lever manually. This allows safer operation.

EBS/ECS-1W, EBF/ECF-1W Type series are diaphragm type emergency shut off val-ves with different shapes, operations, connection methods and are made of different materials.

FEATURES

- Compact, light weight.
- Wide range of working pressure.
- A variety of models available for meeting different demands.

SPECIFICATIONS

Model name	EBS-1W	ECS-1W	EBF-1W	ECF-1W
Code name	**EBS1W-F**	**ECS1W-F**	**EBF1W-F**	**ECF1W-F**
Size	10~50(⅜″~2″)		15~50(½″~2″)	
End connection	Screwed JIS Rc		Flanged JIS 10KFF	
Operation	Deenergized close	Energized close	Deenergized close	Energized close
Applicable fluid	Water, air & inert gases			
Fluid temperature	5~60℃			
Applicable pressure	0~1.0MPa			
Fluid viscosity	50cSt or less			
Rated voltage	Exclusive use:AC100V 50/60Hz or AC200V 50/60Hz			
Rated Current	AC100V:0.3A, AC200V:0.15A			
Starting Current	AC100V:1.0A, AC200V:0.5A			
Ambient temperature	5~40℃			
Protection	Dust proof (Insulated in the E class)・Indoor use*1.			
Materials	Body(Cast bronze*2), Diaphragm(Synthetic rubber)			
Valve body pressure test	Hydraulic 1.5MPa			

＊1. For outdoor use, protect the valve with a cover.
＊2. Stainless steel body valve is available upon your request.

DIMENSIONS(EBS-1W, ECS-1W Type)

(mm)

Size	d	Ls	Gs	H	S	Cv value	Mass(kg)
10(⅜″)	⅜″	63	15	176	70	3	2.6
15(½″)	½″	63	15	176	70	4	2.6
20(¾″)	¾″	80	18	178	70	7	2.7
25(1″)	1″	90	22	183	70	9	3.1
32(1¼″)	1¼″	106	27	190	70	15	3.7
40(1½″)	1½″	118	30	193	70	18	4.7
50(2″)	2″	140	37	207	70	25	6.3

DIMENSIONS(EBF-1W, ECF-1W Type)

(mm)

Size	Lf	Gf	H	S	Cv value	Mass(kg)
15(½″)	112	21	176	70	4	4.1
20(¾″)	118	24	178	70	7	4.7
25(1″)	140	27	183	70	9	6.3
32(1¼″)	150	32	190	70	15	7.6
40(1½″)	160	35	193	70	18	9
50(2″)	190	41	207	70	25	11.5

Flange code JIS 10KFF

CONSTRUCTION

EBS-1W, EBF-1W Type

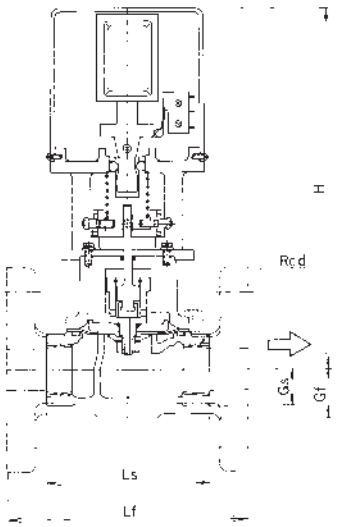

ECS-1W, ECF-1W Type

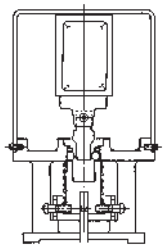

Upper part (lever)

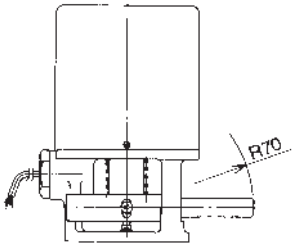



EBS-1W Type
ECS-1W Type



EBF-1W Type
ECF-1W Type

EBS/ECS-1P Type, EBF/ECF-1P Type Emergency Shut off Solenoid Valve

Piston type

It can rapidly close and shut off fluid using electrical signal when emergency occurs. To restart, the operator must confirm safety first and then operate the lever manually. This allows safer operation.

EBS/ECS-1P, EBF/ECF-1P Type series are piston type emergency shut off valves with different shapes, operations, connection methods and are made of different materials.

FEATURES

- Compact, light weight.
- Wide range of working pressure.
- A variety of models available for meeting different demands.

SPECIFICATIONS

Model name	EBS-1P	ECS-1P	EBF-1P	ECF-1P
Code name	**EBS1P-W**	**ECS1P-W**	**EBF1P-W**	**ECF1P-W**
Size	10~50(⅜″~2″)		15~50(½″~2″)	
End connection	Screwed JIS Rc		Flanged JIS 10KFF	
Operation	Deenergized close	Energized close	Deenergized close	Energized close
Applicable fluid	Fuel oils (such as kerosene, diesel oil & A class heavy oil) & other oils*1.			
Fluid temperature	5~100℃			
Applicable pressure	0~1.0MPa			
Fluid viscosity	50cSt or less			
Rated voltage	Exclusive use:AC100V 50/60Hz or AC200V 50/60Hz			
Rated Current	AC100V:0.3A, AC200V:0.15A			
Starting Current	AC100V:1.0A, AC200V:0.5A			
Ambient temperature	5~40℃			
Protection	Dust proof (Insulated in the E class)・Indoor use*2.			
Materials	Body(Cast bronze*3), Disc(Stainless steel with Teflon tip)			
Valve body pressure test	Hydraulic 1.5MPa			

*1. If there is any local regulation for fuel oils or diesel oil, confirm the body materials according to the regulation.
*2. For outdoor use, protect the valve with a cover.
*3. Stainless steel body valve is available upon your request.

DIMENSIONS (EBS-1P, ECS-1P Type)

(mm)

Size	d	Ls	Gs	H	S	Cv value	Mass(kg)
10(⅜″)	⅜″	63	15	173	70	3	2.6
15(½″)	½″	63	15	173	70	4.5	2.6
20(¾″)	¾″	80	18	177	70	7.5	2.7
25(1″)	1″	90	22	182	70	11	3.1
32(1¼″)	1¼″	106	27	188	70	16	3.7
40(1½″)	1½″	118	30	191	70	20	4.7
50(2″)	2″	140	37	205	70	30	6.3

DIMENSIONS (EBF-1P, ECF-1P Type)

(mm)

Size	Lf	Gf	H	S	Cv value	Mass(kg)
15(½″)	112	21	173	70	4.5	4.1
20(¾″)	118	24	177	70	7.5	4.7
25(1″)	140	27	182	70	11	6.3
32(1¼″)	150	32	188	70	16	7.6
40(1½″)	160	35	191	70	20	9
50(2″)	190	41	205	70	30	11.5

Flange code JIS 10KFF



EBS-1P Type
ECS-1P Type



EBF-1P Type
ECF-1P Type

CONSTRUCTION

EBS-1P, EBF-1P Type

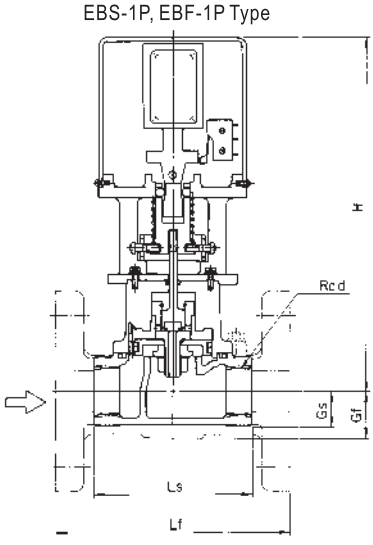

ECS-1P, ECF-1P Type

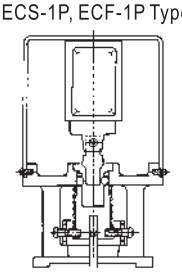

Upper part (lever)

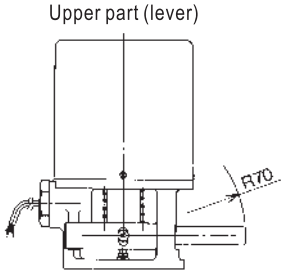

EI-FS, FP Type Emergency Shut off Solenoid Valve

for Fuel Supply Line, Storage Tanks, etc.

When being installed on machines or equipments using fuel or gas, this valve is closed by electrical signal when emergency occurs, so as to shut off the supply line and prevent fire, explosion, and secondary disasters.

Manual restarting requires operator to confirm safety and resume electrical signal before operating the restart lever. For size 100mm (and below) valves, it is easy to switch between power-off closing and power-on closing by changing the position of stopper hole.



SPECIFICATIONS

Model name		EI-FS			EI-FP
Code name		EIFS-RB	EIFS-HB	EIFS-BB	EIFP-RB
Use		Liquids	Gases	Steam	High differential pressure
Size		15~200(½″~8″)			32~200(1¼″~8″)
Applicable fluid		Fuel oils*1, water & oils	Fuel gases*2, air	Steam	Fuel oils*1, water,air & oils
Fluid temperature		5~100℃	5~60℃	Max. 180℃	5~100℃
Fluid viscosity		900cSt or less	—	—	900cSt or less
Rated Pressure		1.0MPa	1.0MPa*2	1.0MPa	1.0MPa*2
Applicable press. differential limit		According to table for applicable press. differential limit			
Leakage allowance		Nil (Confirm at pressure gauge.)		0.01% or less of rated flow	Nil (Confirm at pressure gauge.)
Operation		De-energized close type, reset to open manually when energized*3			
Rated voltage		AC100V 50Hz, AC100V 60Hz, AC200V 50Hz, AC200V 60Hz			
Rated Current		AC100V:0.44A, AC200V:0.22A			
Starting Current		AC100V:1.76A, AC200V:0.88A			
Ambient temperature		−10~40℃			
Protection		Dust proof (Insulated in the B class)・Indoor use*4			
End connection		Flanged JIS 10KFF			
Materials	Body	Body(Cast iron*1,*5), Disc & seat(Cast bronze)			
	Disc	Teflon	Synthetic rubber	—	Teflon
Valve body pressure test		Hydraulic 1.5MPa			

＊1. If there is any local regulation for fuel oils or diesel oil, confirm the body materials according to the regulation.
＊2. In case of fuel gases use, rated pressure is up to 0.2MPa. Rated pressure 1.0MPa with cast steel valve body is available upon your request.
＊3. Energized close type is available upon your request.
＊4. Use rain cover and terminal box for outdoor installation.
＊5. For products with cast bronze (size 50~100mm), cast steel, or stainless steel body, please contact our agent in your area.
＊6. Item with an explosion proof limit switch used to confirm operation is available upon your request.
＊7. Refer to Page 244 for method of wiring.

DIMENSIONS

(mm)

Size	15(½″)	20(¾″)	25(1″)	32(1¼″)	40(1½″)	50(2″)	65(2½″)	80(3″)	100(4″)	125(5″)	150(6″)	200(8″)
L	112	125	140	160	180	200	270	290	350	360	410	500
G	52	57	62	67	72	82	120	140	159	190	214	241
H	356	358	363	366 (370)	384 (388)	394 (398)	412 (412)	432 (432)	451 (451)	585 (589)	607 (613)	633 (639)
S(Reference)	233	233	233	233	363	363	363	363	363	530	530	530
Cv value	3.6	6.4	10	16	25	40	67	102	160	250	360	640
Mass(kg)	8	8.5	10.3	11.6	13.2	16.4	32.4	37.1	58.1	105	130	190

＊Figures in ( ) are the dimensions for EI-FP Type.

Flange code JIS 10KFF

APPLICABLE PRESS. DIFFERENTIAL LIMIT

(MPa)

Size	15(½″)	20(¾″)	25(1″)	32(1¼″)	40(1½″)	50(2″)	65(2½″)	80(3″)	100(4″)	125(5″)	150(6″)	200(8″)
EI-FS Type	1.0	1.0	1.0	0.7	0.7 (0.4)	0.5 (0.3)	0.3 (0.15)	0.2 (0.1)	0.1 (0.05)	0.06	0.04	0.02
EI-FP Type	—	—	—	1.0	1.0	1.0	1.0	1.0	1.0	0.5	0.5	0.5

＊Figures in ( ) are in case of 233mm for S in dimension table.

CONSTRUCTION

EI-FS Type

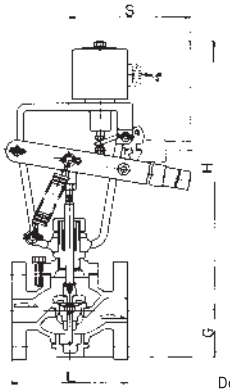

EI-FP Type disc structure

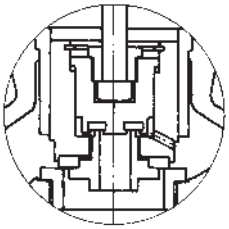

Depending on size, the structure may vary.

EIE-FS, FP Type Pressure Resistance and Explosion Proof Emergency Shut off Solenoid Valve

d2G4 pressure resistant and explosion proof structure

Pressure resistant and explosion proof solenoid valve is ideal for piping of fuel storage tank system and other important lines. It can close and shut off fluid flow by electric signal (such as one sent out by vibration sensor) when earthquake, fire or other accident occurs, and prevent secondary disasters. Manual restarting requires operator to confirm safety and resume electric signal before operating the restart lever. For size 100mm (and below) valves, it is easy to switch between power-off closing and power-on closing by changing the position of stopper hole.



SPECIFICATIONS

Model name		EIE-FS			EIE-FP
Code name		EIEFS-RB	EIEFS-HB	EIEFS-BB	EIEFP-RB
Use		Liquids	Gases	Steam	High differential pressure
Size		15~200(½″~8″)			32~200(1¼″~8″)
Applicable fluid		Fuel oils*1, water & oils	Fuel gases, air	Steam	Fuel oils*1, water,air & oils
Fluid temperature		5~100℃	5~60℃	Max. 180℃	5~100℃
Fluid viscosity		900cSt or less	—	—	900cSt or less
Rated Pressure		1.0MPa	1.0MPa*2.	1.0MPa	1.0MPa*2.
Applicable press. differential limit		According to table for applicable press. differential limit			
Leakage allowance		Nil (Confirm at pressure gauge.)		0.01% or less of rated flow	Nil (Confirm at pressure gauge.)
Operation		De-energized close type, reset to open manually when energized*3.			
Rated voltage		AC100V 50Hz, AC100V 60Hz, AC200V 50Hz, AC200V 60Hz			
Ambient temperature		−10~40℃			
Protection		Pressure resistance and explosion proof (d2G4 Insulated in the B class) · indoor use*4.			
End connection		Flanged JIS 10KFF			
Materials	Body	Body(Cast iron*1·*5), Disc & seat(Cast bronze)			
	Disc	Teflon	Synthetic rubber	—	Teflon
Valve body pressure test		Hydraulic 1.5MPa			

* 1. If there is any local regulation for fuel oils or diesel oil, confirm the body materials according to the regulation.
* 2. In case of fuel gases use, rated pressure is up to 0.2MPa. Rated pressure 1.0MPa with cast steel valve body is available upon your request.
* 3. Energized close type is available upon your request.
* 4. Use rain cover and terminal box for outdoor installation.
* 5. For products with cast bronze (size 50~100mm), cast steel, or stainless steel body, please contact our agent in your area.
* 6. Item with an explosion proof limit switch to confirm operation is available upon your request.

CURRENT VALUES

(A)

Voltage division		AC100V 50Hz	AC100V 60Hz	AC200V 50Hz	AC200V 60Hz
Current value	Rated	0.65	0.65	0.30	0.30
	Starting	5.7	6.2	2.7	3.1

DIMENSIONS

(mm)

Size	15(½″)	20(¾″)	25(1″)	32(1¼″)	40(1½″)	50(2″)	65(2½″)	80(3″)	100(4″)	125(5″)	150(6″)	200(8″)
L	112	125	140	160	180	200	270	290	350	360	410	500
G	52	57	62	67	72	82	120	141	160	190	214	240
H	454	456	461	464 (468)	482 (486)	492 (496)	510 (502)	530 (524)	549 (543)	681 (681)	705 (705)	731 (731)
S(Reference)	233	233	233	233	363	363	363	363	363	530	530	530
Cv value	3.6	6.4	10	16	25	40	67	102	160	250	360	640
Mass(kg)	10.2	10.7	12.5	13.8	15.4	18.6	34.6	39.3	60.3	107	132	192

* Figures in ( ) are the dimensions for EIE-FP Type.

Flange code JIS 10KFF

APPLICABLE PRESS. DIFFERENTIAL LIMIT

(MPa)

Size	15(½″)	20(¾″)	25(1″)	32(1¼″)	40(1½″)	50(2″)	65(2½″)	80(3″)	100(4″)	125(5″)	150(6″)	200(8″)
EIE-FS Type	1.0	1.0	1.0	0.7	0.7 (0.4)	0.5 (0.3)	0.3 (0.15)	0.2 (0.1)	0.1 (0.05)	0.06	0.04	0.02
EIE-FP Type	—	—	—	1.0	1.0	1.0	1.0	1.0	1.0	0.5	0.5	0.5

* Figures in ( ) are in case of 233mm for S in dimension table.

CONSTRUCTION

EIE-FS Type

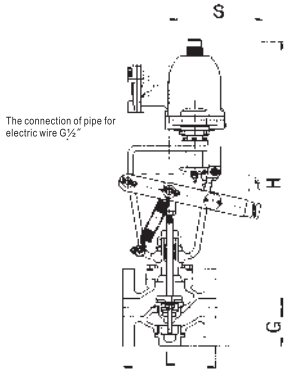

Disc structure of EIE-FP Type

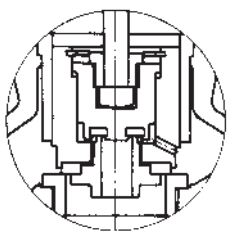

Depending on size, the structure may vary.

DATA/Emergency Shut off Valve

Fig.1 Piping example

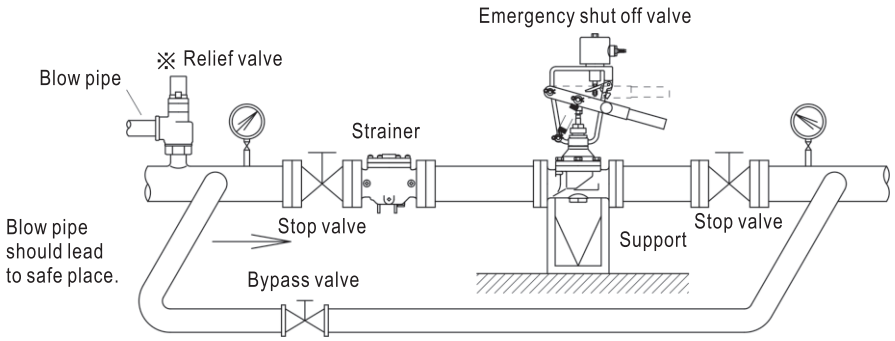

Fig.2 Piping example

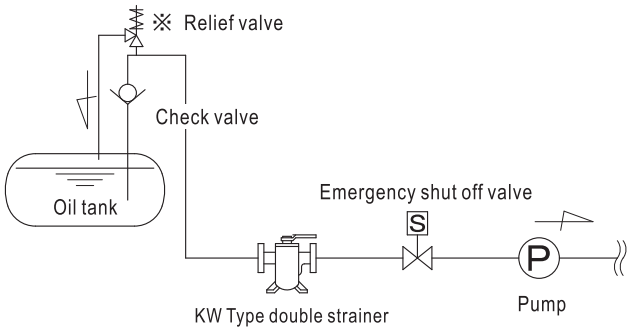

※ In the case of liquid application, install relief valve if water hammer or thermal expansion of fluid due to change of ambient temperature is anticipated.

■ SELECTION AND INSTALLATION

1. In general, strainer should be installed on the primary side of emergency shut off valve (see Fig.1).
2. Install a bypass pipe (with stop valve) between the primary and secondary sides of emergency shut off valve if the operation of equipment cannot be stopped (see Fig.1).
3. The drive unit of the valve should stand upright above to horizontal pipe (see Fig.1).
4. Back flow may occur when the secondary pressure is larger than the primary pressure. To prevent back flow, install check valve on the secondary side.
5. When used for liquid, the pressure inside the piping may increase due to water hammer which occurs when valve is closed or due to the expansion caused by ambient temperature increase. In this case, it is recommended to install relief valve to protect equipment (see Fig.1, 2).
6. The valve cannot open or close when pressure exceeds rated pressure. And the valve cannot operate under vacuum pressure.
7. Use explosion proof model if there is explosive gas accumulated in the atmosphere.
8. See specifications of product for suitable ambient temperature.
9. For outdoor installation, cover the valve to avoid exposure to rain or direct sunlight.
10. Connect coil properly using 0.75mm^2 or above wire. Install fuse to protect electric circuit.
11. To avoid malfunction caused by vibration, install shock absorber for places with excessive vibration.
12. Make sure the arrow mark on emergency shut off valve match with the direction of flow of fluid.
13. Leave sufficient space for maintenance purpose.
14. Fix and support piping properly to prevent the valve from being damaged due to weight of piping, excessively large stress, bending force or vibration.
15. Discharge drain or apply thermal insulation if there is risk of freezing.
    However, the coil should not be applied with any thermal insulation.

MOTOR VALVES 14

ML Types are motor valves consisting of the actuating parts to alter the rotation of the motor shaft to the piston movement with linkage system and the main valve part to regulate the flow. With electric or electronic controller, two position regulation or proportional regulation is conducted to adjust the flow of various fluids and regulate the temperature, pressure, capacity, etc. BM Types are small sized compact motor valves to be used for two position regulation.

Model name	End connection	Size	Applicable fluid	Type	Materials		Page
					Body	Disc & Seat	
BM-12S	Screwed	10~25(⅜″~1″)	Water,oils,air, gases or liquids	Ball type	Cast bronze	Stainless steel	254
		32~50(1¼″~2″)			Brass		
BM-13S		15~25(½″~1″)			Cast bronze		
BM-14S					Stainless steel		
BM-12SR	Screwed	10~25(⅜″~1″)	Water,oils,air, gases or liquids	Ball type	Cast bronze	Stainless steel	255
BM-13SR		15~25(½″~1″)					
BM-14SR					Stainless steel		
BM-12CR	Screwed	10~25(⅜″~1″)	Water,oils,air, gases or liquids	Ball type	Cast bronze	Stainless steel	256
BM-13CR		15~25(½″~1″)					
BM-14CR					Stainless steel		
BM-9S	Screwed	15~25(½″~1″)	Steam or hot water	Ball type	Brass	Stainless steel	257
BM-9SR							
BM-7S	Screwed	10~50(⅜″~2″)	Liquids, air or gases	Ball type	Brass	Brass,chrome plated	258
BM-1S	Screwed	10~50(⅜″~2″)	Liquids, air or gases	Ball type	Stainless steel	Stainless steel	259
3BM-1S	Screwed	15~50(½″~2″)	Liquids, air or gases	Ball type	Brass	Brass	260
ML-FD	Flanged	32~150(1¼″~6″)	Steam, water, hot water, oils or gases	Double seated	Cast iron	Cast bronze	261
ML-TS	Screwed	15~50(½″~2″)	Water,hot water, oils or gases	Single seats	Cast bronze	Cast bronze	262
ML-FS	Flanged	15~100(½″~4″)			Cast iron		
ML-FW	Flanged	32~150(1¼″~6″)	Water,hot water, oils or gases	Balance type Single seated	Cast iron	Cast bronze	263
TBM-8S	Screwed	10~50(⅜″~2″)	Hot water	Ball type	Brass	Brass,chrome plated	266

BM-12S, 13S, 14S Type Ball Valve Type Motor Valve

Two-way valve for on/off control

Compact, light weight, general purpose ball type motor valve with rated voltage AC100/200V, wide range of applicable pressure, and can be handled as easily as solenoid valve.

BM-12S Type is a valve for general purpose, BM-13S Type has long neck, and BM-14S Type has stainless steel body. Both are for on/off control.



BM-12S Type (Size 10~25mm)



BM-12S Type (Size 32~50mm)



BM-13S Type



BM-14S Type

FEATURES

- Rated voltage AC100/200V.
- Compact, light weight, easy to handle.
- Wide range of applicable pressure for a variety of applications.
- No limitation on flow direction and installation direction (in the case of indoor application).
- Durable stainless steel ball.

SPECIFICATIONS

Model name		BM-12S	BM-13S	BM-14S
Code name		**BM12S-J**	**BM13S-J**	**BM14S-D**
Type		**Standard neck**	**Long neck**	**Standard neck**
Size		10~50(⅜″~2″)	15~25(½″~1″)	
Applicable fluid		Water, oils*1, air, gases, & liquids		
Fluid temperature		−10~80℃(Freezing is not allowed.)		
Applicable pressure		0~1.0MPa		
Ambient temperature		−10~50℃		
Operation		ON/OFF control		
Leakage allowance		Water & oils:Nil(Confirm at pressure gauge), Air & gases:50mL/min(Standard state) or less		
End connection		Screwed JIS Rc		
Valve body pressure test		Hydraulic 1.75MPa		
Materials	Body	**Cast bronze(Brass for Size 32~50mm)**		**Stainless steel**
	Ball	Stainless steel		
Rated voltage		Common use AC100/110/200/220V (50/60Hz)*2.		
Allowable voltage fluctuation range		Rated voltage ±5%		
Rated capacity		Size 10~25mm:13VA(AC110V), 26VA(AC220V), Size 32~50mm:20VA(AC110V), 40VA(AC220V)		
Rated/Starting current		Size 10~25mm:0.12A/0.12A, Size 32~50mm:0.18A/0.18A		
Open/close time		Size 10~25mm:4.6/3.8sec(50/60Hz), Size 32~50mm:10/8.5sec(50/60Hz)		
Insulation		Class E		
Time rating		Size 10~25mm:20min, Size 32~50mm:10min		
Withstanding voltage test		AC 1500V/min		
Insulation resistance		50MΩ or more		
Overload protection		Thermal protector is built in		
Protection		Rain proof type (IP-53 corresponding)*5.		
Manual control device		Equipped		

＊1. If there is any local regulation for fuel oils or diesel oil, contirm the body materials according to the regulation.
＊2. Other special voltage is available upon your request.
＊3. Space-heater is also available upon your request. (Pay attention to avoid rust caused by dew condensation inside the actuator.)
＊4. Inner relay and open/close signal contact are also available upon your request.
＊5. Avoid exposure to direct sunray in the case of outdoor installation.

WIRING DIAGRAM

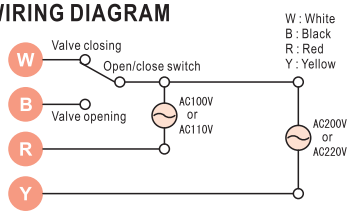

Unused wire (red or yellow) must be insulated.
Note: Install space heater if condensation is anticipated.

DIMENSIONS

(mm)

Size	d	D	L	L_1	G	Cv value	BM-12S Type		BM-13S Type		BM-14S Type	
							H	Mass(kg)	H	Mass(kg)	H	Mass(kg)
10(⅜″)	⅜″	12.5	62	31	16	4.5	107	1.2	—	—	—	—
15(½″)	½″	12.5	62	31	16	7	107	1.2	138	1.2	107	1.1
20(¾″)	¾″	15	72	35(33)	19	10	111	1.3	140	1.3	111	1.2
25(1″)	1″	21	81	40.5	23	20	115	1.5	145	1.5	115	1.4
32(1¼″)	1¼″	24	82	41	29	25	128	2.3	—	—	—	—
40(1½″)	1½″	32	96	45	34	45	134	2.7	—	—	—	—
50(2″)	2″	38	120	57	41	63	140	3.7	—	—	—	—

＊Figures in ( ) are for BM-14S Type

CONSTRUCTION

BM-12S Type (Size 10~25mm)

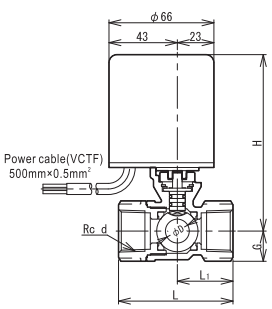

BM-12S Type (Size 32~50mm)

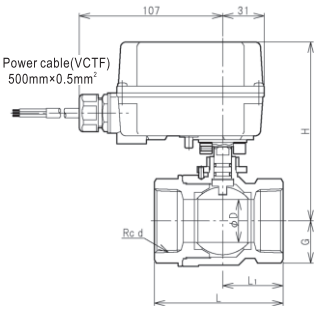

BM-13S Type

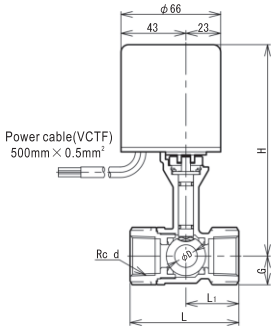

BM-14S Type

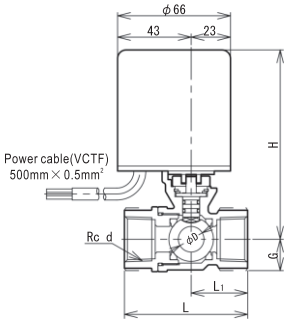

BM-12SR, 13SR, 14SR Type Ball Valve Type Spring Return Motor Valve

Two-way valve for on/off control

Ball type spring return motor valve can maintain opening or closing state with extremely light current. To switch between opening and closing state, turn on or turn off power.

This product combines the characteristics of motor valve (no limitation on flow direction) and solenoid valve (2-wire control).

BM-12SR Type is a valve for general purpose, BM-13SR Type has long neck, and BM-14SR Type has stainless steel body. Both are for on/off control.



BM-12SR Type



BM-13SR Type



BM-14SR Type

WIRING DIAGRAM

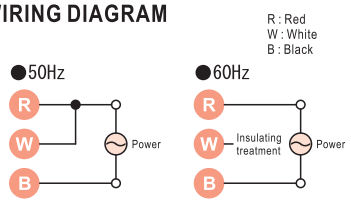

Unused wire (white wire in the case of 60Hz) must be insulated.

FEATURES

- 2-wire type that can be handled like solenoid valve.
- Durable stainless steel ball.
- No limitation on flow direction and installation direction (in the case of indoor application).

SPECIFICATIONS

Model name		BM-12SR	BM-13SR	BM-14SR
Code name		BM12SR-J1 / BM12SR-J2	BM13SR-J	BM14SR-D
Type		Standard neck	Long neck	Standard neck
Size		10~25(⅜″~1″)	15~25(½″~1″)	
Applicable fluid		Water, oils*1, air, gases & liquids		
Fluid temperature		−10~80℃(Freezing is not allowed.)		
Applicable pressure		0~1.0MPa		
Ambient temperature		−10~45℃		
Operation		Deenergized close, Energized open*2		
Leakage allowance		Water & oils:Nil(Confirm at pressure gauge), Air & gases:50mL/min(Standard state) or less		
End connection		Screwed JIS Rc		
Valve body pressure test		Hydraulic 1.75MPa		
Materials	Body	Cast bronze		Stainless steel
	Ball	Stainless steel		
Rated voltage		AC100V(50/60Hz) / AC200V(50/60Hz)	AC100V(50/60Hz) or AC200V(50/60Hz)	
Allowable voltage fluctuation range		Rated voltage ±10%		
Rated capacity		10VA(AC100/200V)		
Rated current		AC100V:0.1A, 200V:0.05A		
Starting current		AC100V:0.15A, 200V:0.08A		
Open/close time		Open time:36/29 sec or less(50/60Hz), Close time:4~36sec*3		
Operating time interval		More than 1 minute between valve opening and valve closing.*4		
Insulation		Class E		
Time rating		Continuous duty		
Withstanding voltage test		DC500V		
Insulation resistance		100MΩ or more		
Overload protection		Impedance protector		
Protection		Splash-proof type(IP-54 corresponding)*5		
Manual control device		Equipped(on the actuator)		

＊1. If there is any local regulation for fuel oils or diesel oil, confirm the body materials according to the regulation.
＊2. Energized close and de-energized open Type such as BM-12SRC, 13SRC and 14SRC Types are available upon your request.
＊3. Disc close time period is changed by continuous energization time period. Over 30min. continuous energization time period: Close time period 4~10sec. Within 30min. continuous energization time period: Close time period within 36sec.
＊4. High-frequency operation (with operating time interval less than 1 minute) may result in higher noise level and shorter service life of the product.
＊5. Avoid exposure to direct sunray in the case of outdoor installation.

DIMENSIONS

(mm)

Size	d	D	L	L1	G	Cv value	BM-12SR Type		BM-13SR Type		BM-14SR Type	
							H	Mass(kg)	H	Mass(kg)	H	Mass(kg)
10(⅜″)	⅜″	12.5	62	31	16	4.5	137	1.4	—	—	—	—
15(½″)	½″	12.5	62	31	16	7	137	1.4	168	1.5	137	1.4
20(¾″)	¾″	15	72	35(33)	19	10	141	1.6	170	1.6	141	1.5
25(1″)	1″	21	81	40.5	23	20	145	1.8	175	1.9	145	1.7

＊Figures in ( ) are for BM-14SR Type

CONSTRUCTION

BM-12SR Type

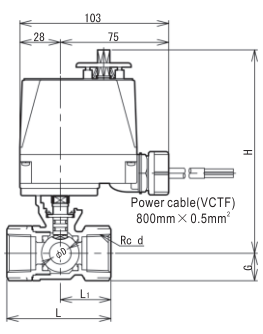

BM-13SR Type

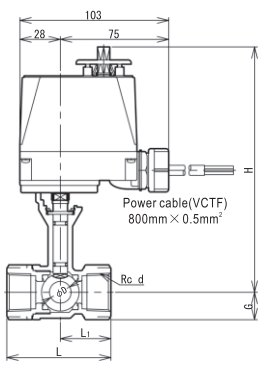

BM-14SR Type

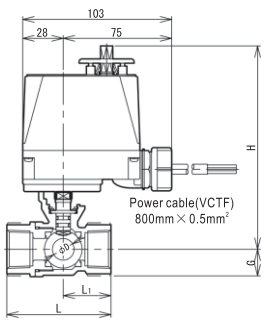

BM-12CR, 13CR, 14CR Type Ball Valve Type Capacitor Return Motor Valve

Two-way valve for on/off control

Ball type capacitor return motor valve uses capacitor to store electricity and opens or closes using such electricity stored when power is off.

This product combines the characteristics of motor valve (no limitation on flow direction) and solenoid valve (2-wire control).

BM-12CR Type is a valve for general purpose, BM-13CR Type has long neck, and BM-14CR Type has stainless steel body. Both are for on/off control.



BM-12CR Type

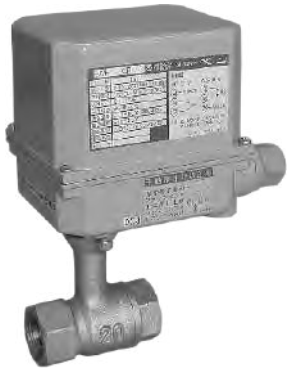

BM-13CR Type



BM-14CR Type

FEATURES

- Rated voltage AC100/200V.
- 2-wire type that can be handled like solenoid valve.
- Low rated current, energy saving.
- Durable stainless steel ball.
- No limitation on flow direction and installation direction (in the case of indoor application).

SPECIFICATIONS

Model name		BM-12CR	BM-13CR	BM-14CR
Code name		**BM12CR-J**	**BM13CR-J**	**BM14CR-D**
Type		**Standard neck**	**Long neck**	**Standard neck**
Size		10~25(⅜″~1″)	15~25(½″~1″)	
Applicable fluid		Water, oils*1., air, gases & liquids		
Fluid temperature		−10~80℃(Freezing is not allowed.)		
Applicable pressure		0~1.0MPa		
Ambient temperature		−10~50℃		
Operation		De-energized close, Energized open*2.		
Leakage allowance		Water & oils:Nil(Confirm at pressure gauge), Air & gases:50mL/min(Standard state) or less		
End connection		Screwed JIS Rc		
Valve body pressure test		Hydraulic 1.75MPa		
Materials	Body	**Cast bronze**		**Stainless steel**
	Ball	Stainless steel		
Rated voltage		Common use AC100/200V (50/60Hz)		
Allowable voltage fluctuation range		Rated voltage ±10%		
Rated capacity		3VA*4. (20VA*3.)		
Rated current		AC100V:0.03A*4., AC200V:0.015A*4.		
Starting current		AC100V:0.2A*3., AC200V:0.1A*3.		
Open/close time		Around 6sec *4.*5.		
Insulation		Class A		
Time rating		Continuous duty		
Withstanding voltage test		AC1500V/min		
Insulation resistance		20MΩ or more		
Protection		Water jet prevention type(IP-55 corresponding)*6.		
Manual control device		Equipped		

∗1. If there is any local regulation for fuel oils or diesel oils, confirm the body materials according to the regulation.
∗2. Energized close and de-energized open type such as BM-12CRC, 13CRC and 14CRC Types are available upon your request.
∗3. At the beginning of power charges in capacitor.
∗4. At the full power charge in capacitor.
∗5. At the first operation, it is required to charge power for 2 min. before operation. Also in case of first operation and re-start after long time no-use without any power supply for actuator, it takes about 20 seconds to start operation and 30 seconds more for the full-open.
∗6. Avoid exposure to direct sunray in the case of outdoor installation.

DIMENSIONS

(mm)

Size	d	D	L	L_1	G	Cv value	BM-12CR Type		BM-13CR Type		BM-14CR Type	
							H	Mass(kg)	H	Mass(kg)	H	Mass(kg)
10(⅜″)	⅜″	12.5	62	31	16	4.5	139	1.9	—	—	—	—
15(½″)	½″	12.5	62	31	16	7	139	1.9	170	2	139	1.8
20(¾″)	¾″	15	72	35(33)	19	10	143	2.1	172	2.1	143	2
25(1″)	1″	21	81	40.5	23	20	147	2.2	177	2.3	147	2.2

∗ Figures in ( ) are for BM-14CR Type

CONSTRUCTION

BM-12CR Type

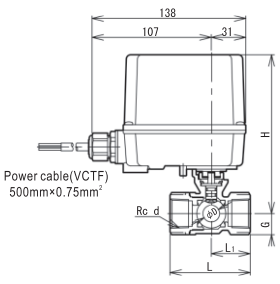

BM-13CR Type

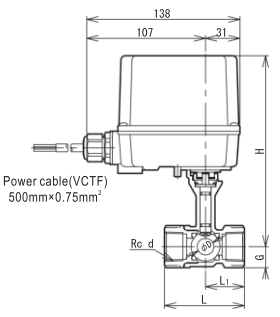

BM-14CR Type

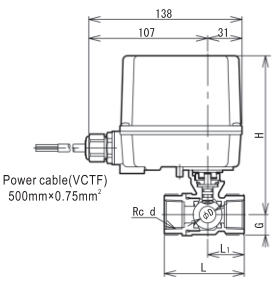

WIRING DIAGRAM

W : White
B : Black
R : Red

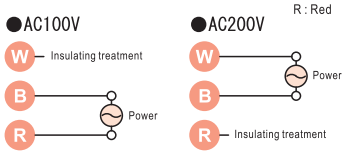

Unused wire (white or red) must be insulated.

BM-9S, 9SR Type Ball Valve Type Motor Valve

Two-way valve for on/off control

This series of ball-type motor-operated valves include BM-9S Type with electrical control for valve opening and closing performance and BM-9SR Type for valve closing performance realized through spring.
The BM-9SR Type, which is a two-wire type valve, can realize rapid closing of valve and is ideal for emergency shutoff of steam.



BM-9S Type



BM-9SR Type

FEATURES

- Wide range of applicable pressure for a variety of applications.
- No limitation on flow direction and installation direction (in the case of indoor application).

SPECIFICATIONS

Model name	BM-9S	BM-9SR
Code name	**BM9S-F**	**BM9SR-J**
Operation	ON/OFF control	Deenergized close, energized open.*1.
Applicable fluid	Steam & hot water	
Fluid temperature	Max. 180°C (For hot water: Max. 100°C)	
Size	15~25(½″~1″)	
Applicable pressure	0~1.0 MPa	
Ambient temperature	−10~50°C	
Leakage allowance	Nill (Confirm at pressure gauge)	
End connection	Screwd JIS Rc	
Valve body pressure test	Hydraulic 1.5 MPa	
Materials	Body(Brass), Ball(Stainless steel)	
Rated voltage	Common use AC100/110/200/220V (50/60Hz)*2.	AC100V(50/60)Hz or AC200V(50/60Hz)*3.
Allowable voltage fluctuation range	Rated voltage ± 5%	Rated voltage ± 10%
Rated capacity	AC110V: 20VA, AC220V: 40VA	12VA (AC100/200V)
Rated current	0.18A	AC100V: 0.12A, AC200V: 0.06A
Starting current	0.18A	AC100V: 0.2A, AC200V: 0.1A
Open/close time	10/8.5 sec (50/60Hz)	Open time: 15/12 sec (50/60 Hz). Close time: 6 sec.
Operating time interval	—	More than 1 min. between valve opening and closing*4.
Insulation	Class E	
Time rating	10 min	Continuous duty
Withstanding voltage test	AC 1500V/min	
Insulation resistance	≧50MΩ at DC500V	≧100MΩ at DC500V
Overload protection	Thermal protector is built in	
Protection	Dust & rain proof (IP-53 corresponding)*5.	Splash-proof (IP-54 corresponding)*5.
Manual control device	Equipped	Equipped (below the actuator)*6.

* 1. Energized close and de-energized open type such as BM-9SRC Type are available upon your request.
* 2. Rated voltage AC24V, DC12V, and DC24V are available upon your request.
* 3. Rated voltage AC24V are available upon your request.
* 4. High-frequency operation (with operating time interval less than 1 minute) may result in higher noise level and shorter service life of the product.
* 5. Avoid exposure to direct sunray in the case of outdoor installation.
* 6. All-open state can not be maintained.

DIMENSIONS

(mm)

Size	d	D	L	L_1	G	Mass(kg)		Cv value	Mass(kg)	
						BM-9S Type	BM-9SR Type		BM-9S Type	BM-9SR Type
15(½″)	½″	11.5	62	31	20	203	228	6	2.3	2.4
20(¾″)	¾″	15	75	37.5	23	207	232	10	2.5	2.6
25(1″)	1″	20	85	42.5	26	211	237	18	2.8	3

CONSTRUCTION

BM-9S Type

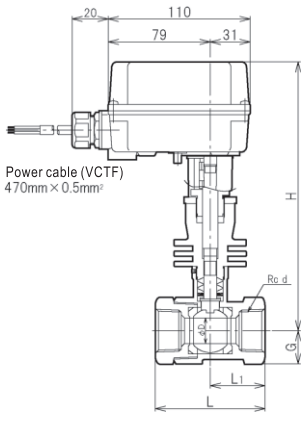

BM-9SR Type

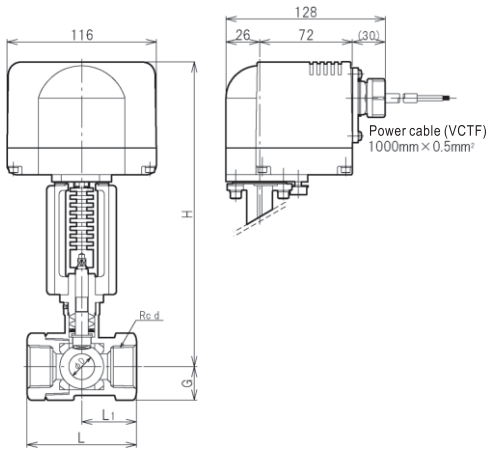

WIRING DIAGRAM

BM-9S Type

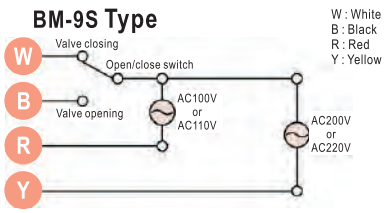

Unused wire must be insulated.

BM-9SR Type

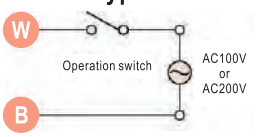

BM-7S Type Ball Valve Type Motor Valve (for Liquids, Air or Gases)

Two-way valve for on/off control

High grade motor valve for on/off control, with characteristics of ball type vale, simple structure, and sufficient rotating torque.



FEATURES

- Large operating power.
- The state of valve can be checked from outside.
- Manual open/close available.
- No limitation on flow direction and installation direction.
- The signal for valve open/close can be drawn out.
- Embedded thermal protector (for size 32mm above).
- Rainproof, suitable for outdoor application.*

SPECIFICATIONS

Model name	BM-7S	
Code name	BM7S-F1	BM7S-F2
Type	Full bore	
Applicable fluid	Liquids, air & gases	
Fluid temperature	−10~100℃(Freezing is not allowed.)	
Applicable pressure	Max. 1.0MPa	
Ambient temperature	−10~50℃	
Operation	ON/OFF control	
Leakage allowance	Nil(Confirm at pressure gauge)	
End connection	Screwed JIS Rc	
Valve body pressure test	Hydraulic 1.5MPa	
Materials	Body(Brass), Ball(Brass, Chrome plated), Cover(Cast aluminum)	
Rated voltage	AC100/110V 50/60Hz	AC200/220V 50/60Hz
Allowable voltage fluctuation range	Rated voltage ±5%	
Insulation	Class E	
Time rating	30min	
Withstanding voltage test	AC 1500V/min	
Insulation resistance	50MΩ or more	
Overload protection	Thermal protector is built in (Size 32~50mm)	
Protection	Rain proof (with cabtyre cable)*	
Open/close check contact	Provided (voltage) Contact capacity:AC125, 250V, 10A(Equivalent to JIS C4505 V3)	
Manual control device	Equipped	

* Avoid exposure to direct sunray in the case of outdoor installation.

RATED CAPACITY, CURRENT VALUES, OPEN/CLOSE TIME

Size	10~25(⅜″~1″)	32~50(1¼″~2″)
Rated capacity	22VA	50VA
Rated current	AC100V:0.22A, AC200V:0.11A	AC100V:0.50A, AC200V:0.25A
Starting current	AC100V:0.30A, AC200V:0.15A	AC100V:0.90A, AC200V:0.45A
Open/close	Approx. 3sec	Approx. 6sec

DIMENSIONS

(mm)

Size	d	A	B	L	G	H	Port size	Cv value	Mass(kg)
10(⅜″)	⅜″	139	89	50	16	232	10	4.5	3.3
15(½″)	½″	139	89	65	20	236	15	10	3.5
20(¾″)	¾″	139	89	75	24	242	20	18	3.7
25(1″)	1″	139	89	85	29	247	25	27	3.9
32(1¼″)	1¼″	159	109	100	34	282	32	45	6.2
40(1½″)	1½″	159	109	109	41	291	40	70	7.1
50(2″)	2″	159	109	132	49	299	50	110	8.6

OPERATION

CO power-on opening
CS power-on closing

CIRCUIT DIAGRAM OF ACTUATOR

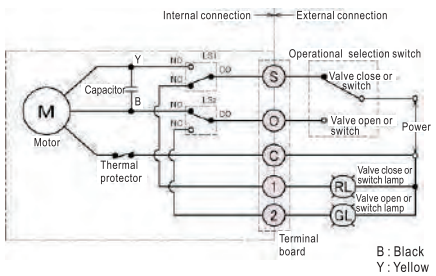

(The figure shows all-closing state)
Note: Size 10~25mm product has no thermal protector embedded.

CONSTRUCTION

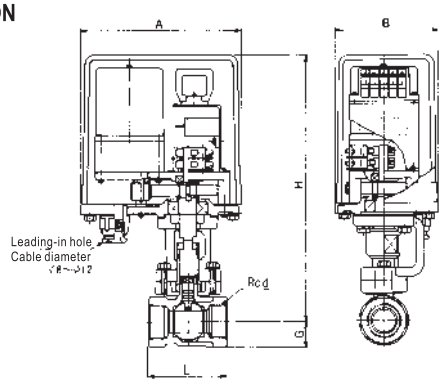

BM-1S Type Ball Valve Type Motor Valve (for Liquids, Air or Gases)

Two-way valve for on/off control

BM-1S Type is a motor on/off valve with characteristics of ball valve and stainless body.



FEATURES

- Large operating power.
- The state of valve can be checked from outside.
- Manual open/close.
- No limitation on flow direction and installation direction.
- The signal for valve open/close can be drawn out.
- Embedded thermal protector (for size 32~50mm above)
- Rainproof, suitable for outdoor application. *

SPECIFICATIONS

Model name	BM-1S	
Code name	**BM1S-D**	
Applicable fluid	Liquids, air & gases	
Fluid temperature	−10~100℃(Freezing is not allowed.)	
Applicable pressure	Max. 1.0MPa	
Ambient temperature	−10~50℃	
Operation	ON/OFF control	
Leakage allowance	Nil(Confirm at pressure gauge)	
End connection	Screwed JIS Rc	
Valve body pressure test	Hydraulic 1.5MPa	
Materials	Body(Stainless steel), Ball(Stainless steel), Cover(Cast aluminum), O-ring(Viton)	
Rated voltage	AC100/110V 50/60Hz or AC200/220V 50/60Hz	
Allowable voltage fluctuation range	Rated voltage ±5%	
Size	10~25(⅜″~1″)	32~50(1¼″~2″)
Rated capacity	22VA	50VA
Rated current	AC100V:0.22A, AC200V:0.11A	AC100V: 0.50A, AC200V:0.25A
Starting current	AC100V:0.30A, AC200V:0.15A	AC100V: 0.90A, AC200V:0.45A
Open/close time	Approx. 2sec	Approx. 4sec
Insulation	Class E	
Time rating	30min	
Withstanding voltage test	AC1500V/min	
Insulation resistance	50MΩ or more	
Overload protection	Thermal protector is built in (Size 32~50mm)	
Protection	Rain proof (with cabtyre cable)*	
Open/close check contact	Provided (voltage) Contact capacity: AC125, 250V, 10A(Equivalent to JIS C4505 V3)	
Manual control device	Equipped	

* Avoid exposure to direct sunray in the case of outdoor installation.

DIMENSIONS

(mm)

Size	d	L	G	H	A	B	W	Port size	Cv value	Mass(kg)
10(⅜″)	⅜″	45	15	219	139	89	44	7.5	2.5	3.1
15(½″)	½″	55	17	222	139	89	50	9.0	3.5	3.2
20(¾″)	¾″	61	20	225	139	89	56	12.5	7	3.3
25(1″)	1″	75	26	229	139	89	65	16	11	3.6
32(1¼″)	1¼″	78	30	265	159	109	80	21	20	5.7
40(1½″)	1½″	82	34	267	159	109	84	24	25	6
50(2″)	2″	100	41	275	159	109	102	32	45	7

OPERATION

CO power-on opening
CS power-on closing

CIRCUIT DIAGRAM OF ACTUATOR

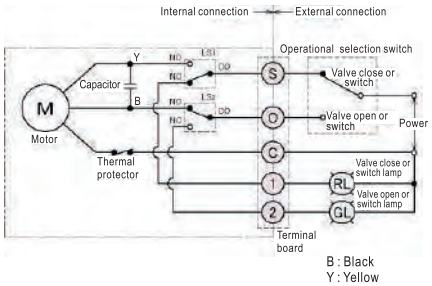

(The figure shows all-closing state)
Note: Size 10~25mm product has no thermal protector embedded.

CONSTRUCTION

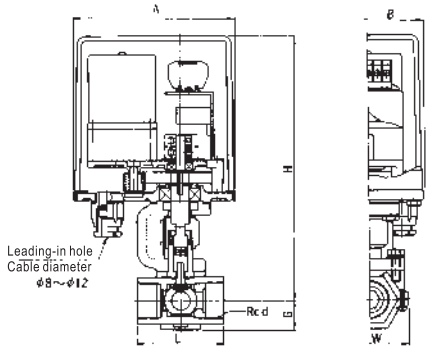

3BM-1S Type Ball Valve Type Motor Valve (for Liquids, Air or Gases)

Three-way valve for on/off control

3BM-1S Type is a compact motor valve with characteristics of ball valve and a 3-way, 2-port (L) structure.



FEATURES

- Large operating power.
- The signal for valve switching can be drawn out.
- The state of valve can be checked from outside.
- No limitation on flow direction and installation direction.
- Manual valve switching possible.
- Embedded thermal protector (for size 32~50mm above)
- Rainproof, suitable for outdoor application.*

SPECIFICATIONS

Model name	3BM-1S	
Code name	**3BM1S-F**	
Applicable fluid	Liquids, air & gases	
Fluid temperature	−10~100℃(Freezing is not allowed.)	
Applicable pressure	Max. 1.0MPa	
Ambient temperature	−10~50℃	
Operation	ON/OFF control	
Leakage allowance	Nil(Confirm at pressure gauge)	
End connection	Screwed JIS Rc	
Valve body pressure test	Hydraulic 1.5MPa	
Materials	Body(Brass), Ball(Brass, Chrome plated), Cover(Cast aluminum)	
Rated voltage	AC100/110V 50/60Hz or AC200/220V 50/60Hz	
Allowable voltage fluctuation range	Rated voltage ±5%	
Size	15~25(½″~1″)	32~50(1¼″~2″)
Rated capacity	22VA	50VA
Rated current	AC100V:0.22A, AC200V:0.11A	AC100V:0.50A, AC200V:0.25A
Starting current	AC100V:0.30A, AC200V:0.15A	AC100V:0.90A, AC200V:0.45A
Switch off time	Size 15~25mm Approx. 2sec, Size 32~50mm Approx. 4sec	
Insulation	Class E	
Time rating	30min	
Withstanding voltage test	AC1500V/min	
Insulation resistance	50MΩ or more	
Overload protection	Thermal protector is built in (Size 32~50mm)	
Protection	Rain proof (with cabtyre cable)*	
Open/close check contact	Provided (voltage) Contact capacity: AC125, 250V, 10A(Equivalent to JIS C4505 V3)	
Manual control device	Equipped	

* Avoid exposure to direct sunray in the case of outdoor installation.

OPERATION

CO power-on

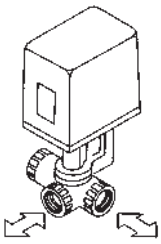

CS power-on

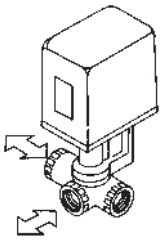

DIMENSIONS

(mm)

Size	d	L	L1	G	H	A	B	Port size	Cv value	Mass(kg)
15(½″)	½″	67	33.5	16	234	139	89	10	2.8	3.4
20(¾″)	¾″	68	34	21	238	139	89	15	7.5	3.5
25(1″)	1″	78.5	39.5	24	242	139	89	20	12	3.8
32(1¼″)	1¼″	89	44.5	25	281	159	109	25	18.5	5.9
40(1½″)	1½″	100	50	33	283	159	109	32	30	6.2
50(2″)	2″	115	57.5	39	290	159	109	40	45	7.2

CIRCUIT DIAGRAM OF ACTUATOR

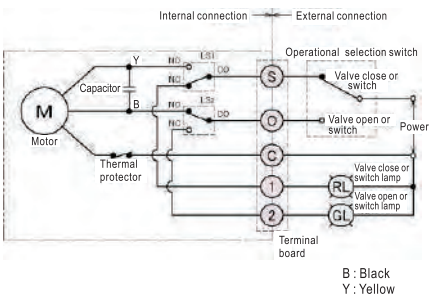

(the state that switching is completed when CS is on)
Note: Size 15~25mm product has no thermal protector embedded.

CONSTRUCTION

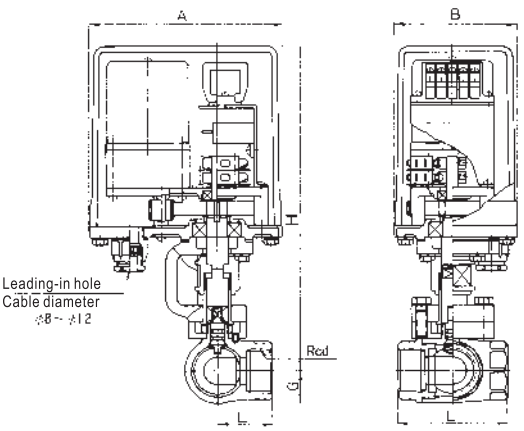

DIRECTION OF FLOW

CS power on

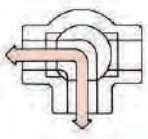

CO power on

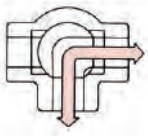

ML-FD Type Motor Valve

Dual seat two-way valve

ML-FD Type dual seat two-way valve is designed for flow control of cold/hot water, oil, steam and gases.

The ON-OFF characteristic is for two-position control, while the linear characteristic is for proportion control. Since the valve is a double seat valve that allows certain leakage, it is not suitable for applications where complete closing is required.



FEATURES

- Large flow, suitable for large pressure differential.
- Less water hammer when opening/closing valve.

SPECIFICATIONS

Model name	ML-FD	
Code name	MLFD-BD	MLFD-BS
Applicable fluid	Water, hot water, oils*1. & gases	Steam
Rated pressure	1.0MPa	
Fluid temperature	Max. 100℃	Max. 180℃
Ambient temperature	−10~60℃	
Plug characteristics	ON-OFF and Linear	
Leakage allowance	Less than 0.5% of rated flow	
Protection	Splash-proof, for indoor installation *2. (Equivalent to IP54 when waterproof cable ground is used.)	
End connection	Flanged JIS 10KFF	
Materials	Body(Cast iron), Trim(Cast bronze)	
Valve body pressure test	Hydraulic 1.5MPa	

＊1. If there is any local regulation for fuel oils or diesel oil, contirm the body materials according to the regulation.
＊2. Rain cover for outdoor installation is available upon your request.
＊3. Refer to Pages 264 and 265 for specifications and circuit, etc.

DIMENSIONS

(mm)

Size	L	G	H	Mass(kg)
32(1¼″)	180	100	460	19
40(1½″)	180	100	460	20
50(2″)	180	110	470	21.5
65(2½″)	215	125	487	27.5
80(3″)	260	136	490	34.5
100(4″)	300	163	523	54.5
125(5″)	360	194	553	76
150(6″)	382	224	577	112

Flange code JIS 10KFF

TABLE OF Cv VALUE AND APPLICABLE DIFFERENTIAL PRESSURE LIMIT

Size	Cv value	Differential pressure limit (MPa)
32(1¼″)	20	1.0
40(1½″)	30	1.0
50(2″)	50	1.0
65(2½″)	75	1.0
80(3″)	105	1.0
100(4″)	170	1.0
125(5″)	250	0.5
150(6″)	360	0.35

CONSTRUCTION

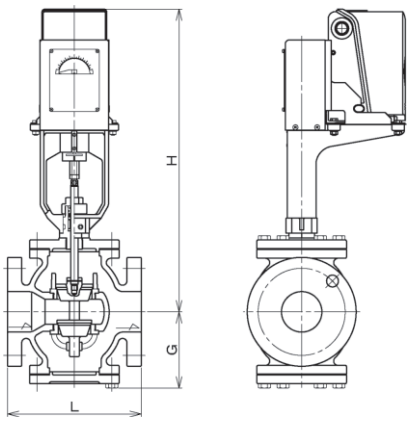

Valve shape

ON-OFF plug Linear plug

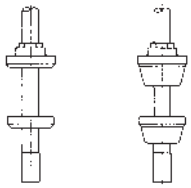

ML-TS, FS Type Motor Valve

Single seat two-way valve

ML-TS Type (screwed) and ML-FS Type (flanged) motor valves are designed for flow control of cold/hot water, oil, steam and gases.

The ON-OFF characteristic is for two-position control, while the linear characteristic is for proportion control. Since the valve has single seat, the leakage is small. Nonetheless, it is not suitable for applications where high pressure differential is required.

FEATURES

- Single seat valve with small leakage.
- Less water hammer when opening/closing valve.

SPECIFICATIONS

Model name	ML-TS	ML-FS
Code name	**MLTS-FD**	**MLFS-BD**
Applicable fluid	Water, hot water, oils*1. & gases*2.	
Rated pressure	1.0MPa	
Fluid temperature	Max. 100℃*2.	
Ambient temperature	−10~60℃	
Plug characteristics	ON-OFF and Linear	
Leakage allowance	Less than 0.01% of rated flow	
Protection	Splash-proof, for indoor installation*3. (Equivalent to IP54 when waterproof cable ground is used.)	
End connection	Screwed JIS Rc	Flanged JIS 10KFF
Materials	Body(Cast bronze), Trim(Cast bronze)*4.	Body(Cast iron), Trim(Cast bronze)*4.
Valve body pressure test	Hydraulic 1.5MPa	

∗1. If there is any local regulation for fuel oils or diesel oil, contirm the body materials according to the regulation.
∗2. Applicable temperature Max. 180℃ for steam is available upon your request.
∗3. Rain cover for outdoor installation is available upon your request..
∗4. Disc with Teflon is available upon your request.
∗5. Refer to Pages 264 and 265 for specifications and circuit, etc.



ML-TS Type



ML-FS Type

DIMENSIONS (ML-TS Type)

(mm)

Size	d	L	G	H	Mass(kg)
15(½″)	½″	63	26	402	8.4
20(¾″)	¾″	80	32	410	8.6
25(1″)	1″	90	36	415	9
32(1¼″)	1¼″	106	44	440	10
40(1½″)	1½″	118	50	452	10.7
50(2″)	2″	140	60	471	13

DIMENSIONS (ML-FS Type)

(mm)

Size	L	G	H	Mass(kg)
15(½″)	112	51	425	11.1
20(¾″)	125	56	429	11.6
25(1″)	140	61	434	13.4
32(1¼″)	160	67	437	14.7
40(1½″)	180	72	456	16.3
50(2″)	200	82	465	19.9
65(2½″)	270	120	482	35.5
80(3″)	290	141	502	40.5
100(4″)	350	160	522	61.5

Flange code JIS 10KFF

TABLE OF Cv VALUE AND APPLICABLE DIFFERENTIAL PRESSURE LIMIT

Size	Cv value	Differential pressure limit (MPa)
15(½″)	3.6	1.0
20(¾″)	6.4	1.0
25(1″)	10	1.0
32(1¼″)	16	0.75
40(1½″)	25	0.45
50(2″)	40	0.3
65(2½″)	67	0.18
80(3″)	102	0.12
100(4″)	160	0.06

∗ Size 65mm or bigger are only ML-FS Type.

CONSTRUCTION

ML-TS Type

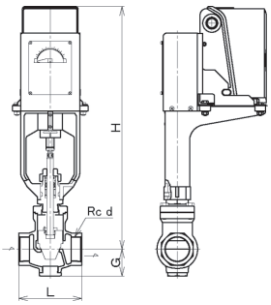

Valve shape

Linear plug ON-OFF plug



ML-FS Type

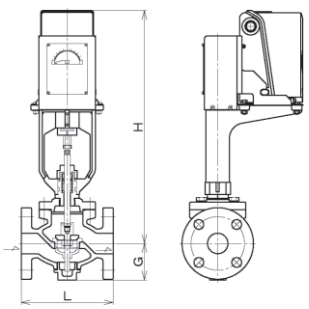

Valve shape

ON-OFF plug Linear plug

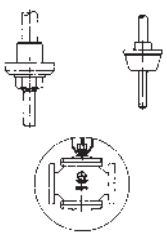

Size 65~100mm

Note:Depending on size, the structure may vary.

ML-FW Type Motor Valve

Single seat two-way valve

ML-FW Type motor valve is a single seat, two-way valve with pressure balancing structure for applications requiring high pressure differential and small leakage.

FEATURES

- Pressure balancing structure for high pressure differential.
- Less water hammer when opening/closing valve.

SPECIFICATIONS

Model name	ML-FW
Code name	MLFW-BD
Applicable fluid	Water, hot water, oils*1. & gases*2.
Rated pressure	1.0MPa
Fluid temperature	Max. 80℃*2.
Ambient temperature	−10~60℃
Plug characteristics	ON-OFF and Linear
Leakage allowance	Less than 0.01% of rated flow
Protection	Splash-proof, for indoor installation*3. (Equivalent to IP54 when waterproof cable ground is used.)
End connection	Flanged JIS 10KFF
Materials	Body(Cast iron), Trim(Cast bronze)*4.
Valve body pressure test	Hydraulic 1.5MPa

＊1. If there is any local regulation for fuel oils or diesel oil, contirm the body material according to the regulation.
＊2. Applicable temperature Max. 180℃ for steam is available upon your request.
＊3. Rain cover for outdoor installation is available upon your request.
＊4. Products with Teflon disc are available.
＊5. Refer to Pages 264 and 265 for specifications and circuit, etc.

DIMENSIONS

(mm)

Size	L	G	H	Mass(kg)
32(1¼″)	160	67	437	16
40(1½″)	180	72	456	18
50(2″)	200	82	465	21
65(2½″)	270	117	471	36
80(3″)	290	140	493	42
100(4″)	350	159	512	65
125(5″)	360	190	543	95
150(6″)	410	214	596	120

Flange code JIS 10KFF

TABLE OF Cv VALUE AND APPLICABLE DIFFERENTIAL PRESSURE LIMIT

Size	Cv value	Differential pressure limit(MPa)
32(1¼″)	16	1.0 (1.0)
40(1½″)	25	1.0 (1.0)
50(2″)	40	1.0 (1.0)
65(2½″)	67	1.0 (0.7)
80(3″)	102	1.0 (0.5)
100(4″)	160	1.0 (0.5)
125(5″)	250	0.5 (0.25)
150(6″)	360	0.35(0.15)

＊Figures in ( ) are for those with Teflon disc.



CONSTRUCTION

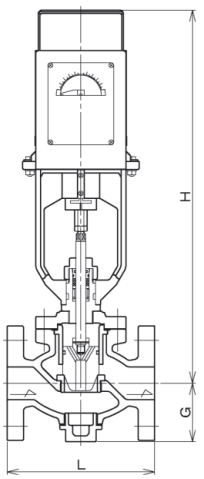

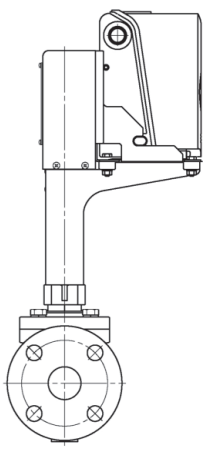



Size 65~150mm

Valve shape

Linear plug

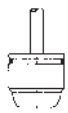

ON-OFF plug

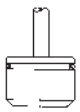

DATA/ML Type Motor Valve



Motor

【MOTOR】

■ FEATURES

- Four types of motor available for meeting requirements of different input methods.
- Low power consumption, energy saving.
- Buffer in drive unit protect motor and disc from excessive stress.
- Needle and scale plate allow easy reading of valve opening degree.

■ SPECIFICATIONS

Control type	ON-OFF type	Proportional control type		
		A motor	B motor *1.	C motor
Input signal	Relay contact	Potentiometer(135Ω/0.5W)	Relay contact	DC 4~20mA
Rated voltage	AC24V 50/60Hz*3.			AC24V 50/60Hz*4.
Rated capacity	9VA			
Timing (at non-load)	50Hz:69sec, 60Hz:58sec			
Withstanding voltage test	AC 500V/min			
Insulation resistance	5MΩ or more			
Ambient temperature	–10~60℃			
Protection	Splash-proof, for indoor installation*5. (Equivalent to IP54 when waterproof cable ground is used.)			

＊1. The proportional B motor is equipped with feedback potential meter (135Ω/0.5W).
＊2. Motor that is equipped with one of the following components are available:
①Auxiliary limit switch unit (with 4 switches, non-voltage/C contacts); or
②Auxiliary potential meter for opening display (1kΩ, max. DC5V)
＊3. AC 100V or 200V for ON-OFF or B motor are available upon your request.
＊4. Proportional C motor with rated voltage AC85~264V free power supply is also available.
＊5. Rain cover for outdoor installation is available upon your request.

■ FIGURATION

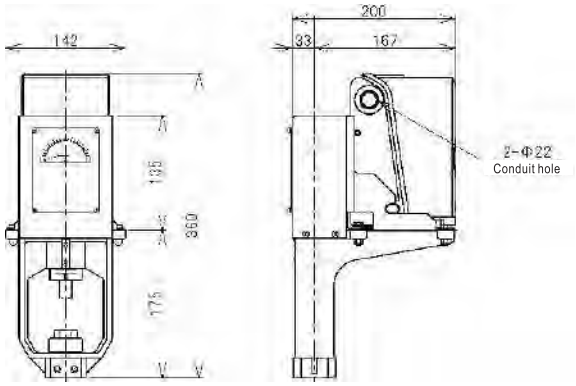



Transformer

【TRANSFORMER】 (accessory, not embedded)

The rated voltage of motor of ML motor valve is AC24V. Use the accessorial transformer to reduce general commercial voltage to rated voltage.

■ FIGURATION

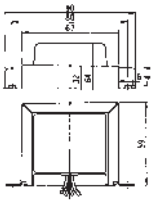

■ SPECIFICATIONS

Primary side voltage	AC100/200V 50/60Hz, AC110/220V 60Hz* Common use by method for wire connection
Secondary side voltage	25V(at non-load)
Apparent power	25VA
Withstanding voltage test	1500V/min
Insulation resistance	100MΩ or more
Coil connection	Coil connection Lead wires at both sides
Mounting	Mount on a panel board, etc. with M4 size screws or nuts.
Mass	0.95kg

＊Other voltages for primary side are available.

■ WIRING DIAGRAM

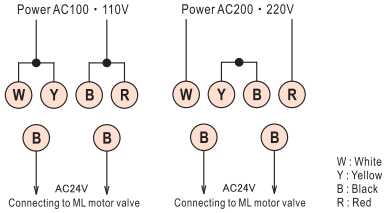

DATA/ML Type Motor Valve

CONTROL TYPE

■ 2-POSITION (ON-OFF) CONTROL

Equipped with 2-position regulator with single-pole double-throw (SPDT) switch, the valve is capable for 2-position control.
As shown in Fig.1, when the connecting point of 2-position regulator is switched and power AC24V is applied between motor terminals 2~3 or 1~3, the valve is opened or closed.
When the valve is fully opened or closed, the limit switch open position or close position turns off the power of motor, and when motor is stopped, the brake starts to work and maintains the position.
When power is turned off when motor is running, the brake maintains the opening degree of valve at the time when motor is stopped.

■ PROPORTIONAL CONTROL

Proportional control is controlled through combination of various proportional regulators and by changing signals of such regulators.
As shown in Fig.3, a proportional AC24V B motor is used, and the proportional regulator outside of control motor has bridge circuit and switch circuit embedded. After receiving signal from measuring device, the balance of bridge circuit is unbalanced position, the contact of switch circuit closes, and the power of motor is turned on and motor starts to run.
When motor is running, the wiper of feedback potential meter, which is linked to main shaft, starts to rotate in opening or closing direction according to certain proportion to balance the bridge circuit. When the bridge circuit is balanced, the contact of balancing relay is open, and the embedded brake in motor maintains the position.
When motor is running before valve is fully opened or closed, the limiting switch turns off the power and makes motor stopped, and the brake maintains the position.
In the case of 135Ω resistance output type proportional regulator without bridge circuit and switch circuit, use proportional AC24V A motor.
In the case of proportional control, use C motor as shown in Fig.4 when the signal of proportional regulator is DC4~20mA instrumentation standardized signal.

■ WIRING DIAGRAM

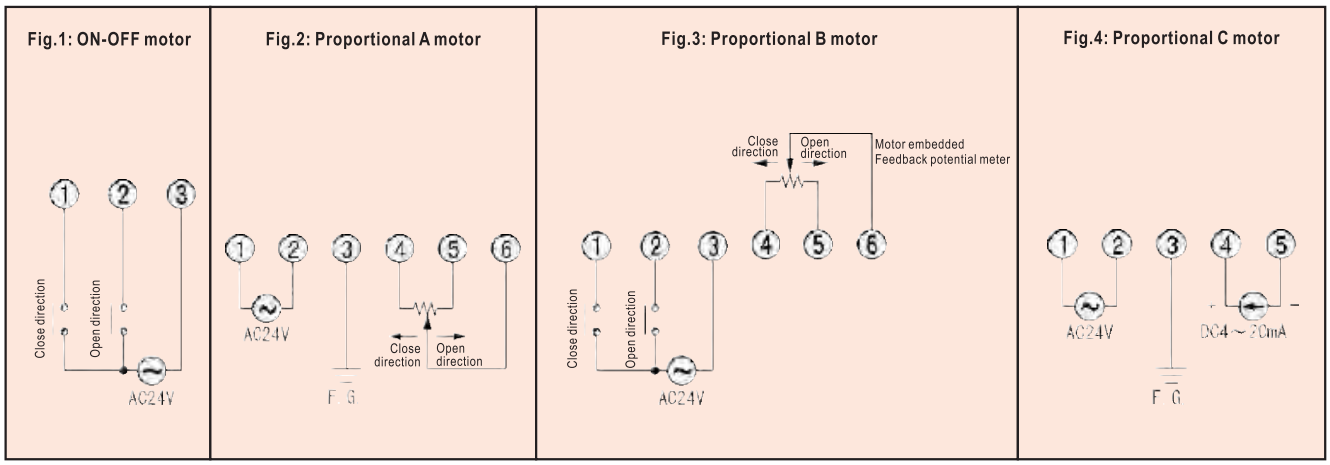

Note: 1.The figures show terminal block in use only.
2.There are some other terminals in the product which are not displayed in above figures. Please leave them alone and do not use them on the relay terminal, etc.

■ SPECIAL SPECIFICATIONS

1. Motor that is equipped with one of the following components are available:
① Auxiliary limit switch unit (with 4 switches, non-voltage/C contacts);
② Auxiliary potential meter for opening display (1kΩ, MAX. DC5V)

2. AC100, 200V motor: Motors that can be directly connected to commercial power source AC100V or AC200V without transformer are available (On-off motor and proportional B motor are also available).

TBM-8S Type Temperature Regulating Ball Valve Type Motor Valve (for Hot water)

Two-way valve for ON/OFF control

TBM-8S Type is a temperature regulating valve combining electric temperature regulator and motor valve. It can help saving time and efforts for selecting temperature regulator and connectin motor valve.

To regulate temperature, just connect the temperature sensor (attached to the valve) to power and switch the knob to set temperature position.



FEATURES

- A combination of electric temperature regulator and motor valve; does not need the troublesome selection work.
- To regulate temperature, just switch the knob to set temperature position.
- Vertical or horizontal installation.
- Compact, space saving.

SPECIFICATIONS

Model name		TBM-8S
Code name		**TBM8S-F**
Motor operated valve body	Use	Heating*1.
	Applicable fluid	Hot water
	Fluid temperature	−10~80℃(Freezing is not allowed.)
	Applicable pressure	0~1.0MPa
	Ambient temperature	5~50℃
	Operation	ON/OFF control
	Leakage allowance	Nil(Confirm at pressure gauge)
	End connection	Screwed JIS Rc
	Valve body pressure test	Hydraulic 1.5MPa
	Materials	Body(Brass), Ball(Brass chrome plated)
	Rated voltage	AC100V 50/60Hz, AC110V 60Hz or AC200V 50/60Hz, AC220V 60Hz
	Allowable voltage fluctuation range	Rated voltage ±5%
	Rated capacity	AC100V:19VA, AC200V:40VA
	Rated current	AC100V:0.18A, AC200V:0.18A
	Starting current	AC100V:0.18A, AC200V:0.18A
	Open/close time	50Hz:10sec, 60Hz:8.5sec
	Insulation	Class E
	Time rating	10min
	Allowed open/close time/min	1cycle/min
	Withstanding voltage test	AC 1000V/min
	Insulation resistance	20MΩ or more
	Overload protection	Thermal protector
	Protection	Drip proof (Indoor use)
	Manual control device	Equipped
Temperature controller	Input	Resistance temperature detector:Pt500Ω (With leads of 1.5m for indoor use)*2.*3.
	Control type	Two-position control
	Temperature setting range	range 0~80℃
	Setting accuracy	±1.6℃
	Control sensitivity	Set to 3℃ prior to shipment (Can be set between 1 and 5℃)
	Rated electric capacity	2VA

＊1. The motor-operated valve for cooling (applicable fluid:water) is available upon your request. (Code name: TBM8S-FA)
＊2. The length of leads connected to the RTD can be extended up to 10m using commercially available leads.
＊3. The temperature-measuring resistance shown in the structure drawing is for indoor use only. For product with different structure, please contact our agent in your area.

DIMENSIONS

(mm)

Size	d	D	L	L_1	G	H	Cv value	Mass(kg)
10(⅜″)	⅜″	9	46	21	13	147	3.5	1.7
15(½″)	½″	12.5	62	28	14	150	7	1.9
20(¾″)	¾″	16	72	32	19	155	11	2
25(1″)	1″	21	81	36	23	159	20	2.2
32(1¼″)	1¼″	24	82	41	29	158	25	2.7
40(1½″)	1½″	32	96	45	34	164	45	3.1
50(2″)	2″	38	120	57	41	170	63	4.1

CONSTRUCTION

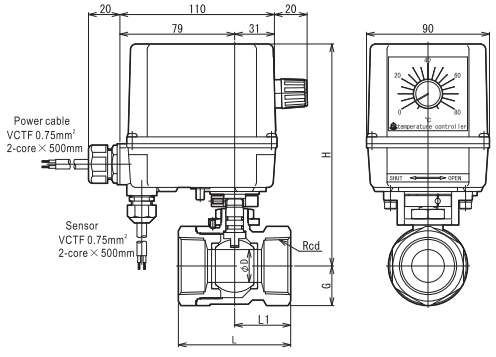

Note: depending on structure, the size may vary.

Cable for temperature (measuring resistance)·Indoor use

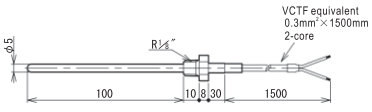

DATA/TBM-8S Temperature Regulating Ball Valve Type Motor Valve (for Hot Water)

SIZE SELECTION CHART (for Water)

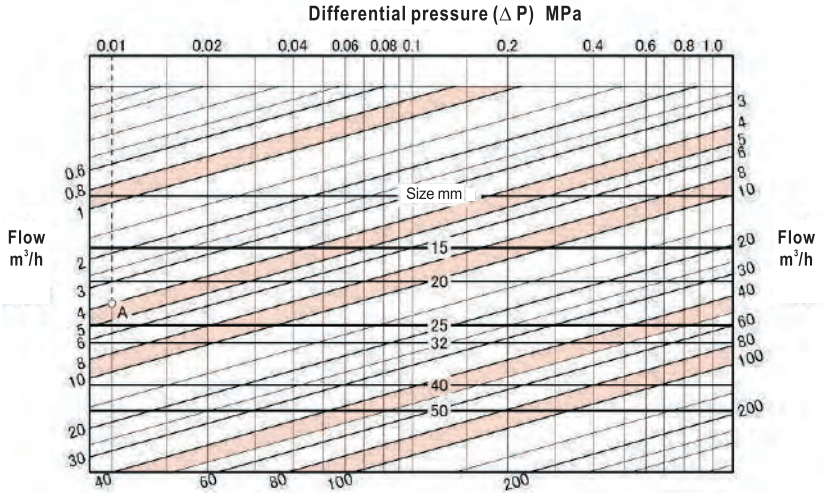

● HOW TO USE THE CHART

Example: Determine the size of valve meeting the following conditions:
Primary pressure: 0.3MPa
Secondary pressure: 0.29MPa
Flow of water: 4m³/h

Differential pressure (ΔP): 0.3−0.29=0.01MPa. Find out the intersection point A between the 0.01MPa differential pressure (ΔP) line and the 4m³/h flow line.
Since point A is between the lines representing nominal diameter 20mm and 25mm, the nominal diameter should be the larger one, i.e., 25mm.

■ PIPING EXAMPLE

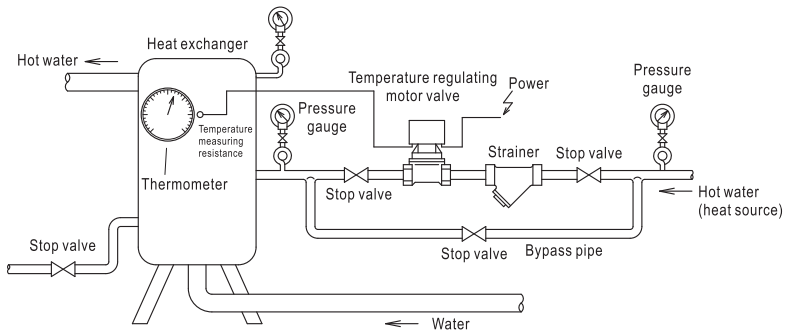

Note:Install heat exchanger if there is risk of temperature increase due to thermal expansion.

■ TEMPERATURE SETTING

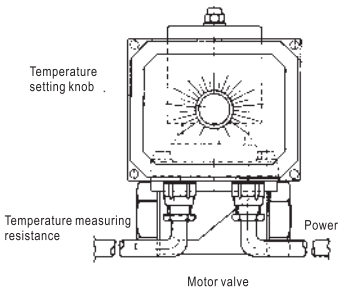

Switch the knob to desired temperature.

DATA/ML Type Motor Valve

Fig.1 Piping example

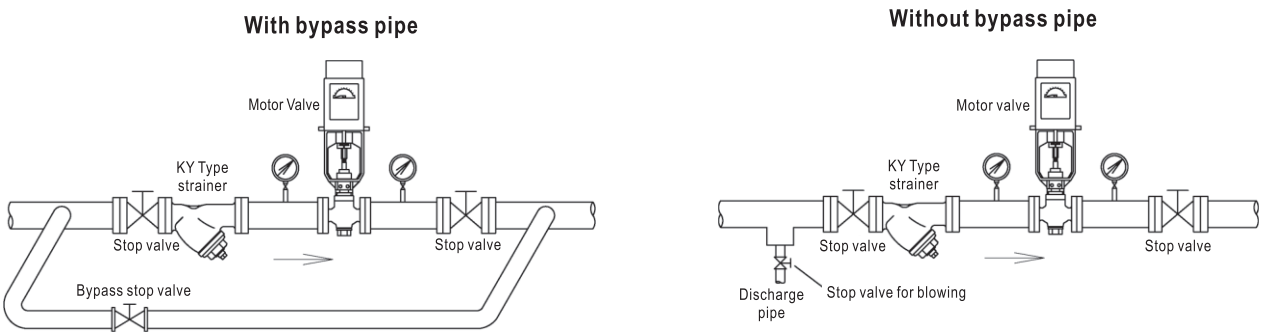

■ Selection and Installation

1. Install strainer on the primary side of motor valve (see Fig.1).
2. Install a bypass pipe (with stop valve) between the primary and secondary sides of motor valve if the operation of equipment cannot be stopped (see Fig.1).
   If you do not intend to install bypass pipe, install blowing stop valve, which is branched from the main pipe, right before the stop valve on the primary side of motor valve, to allow flushing.
3. Install the valve upright to horizontal pipe or on vertical pipe (see Fig.2). For installation on vertical pipe and when the size is 80mm above, leave sufficient space for maintenance purpose.
4. As for application with 1 piece of operational switch, in the case 2 or more motor valves are connected through parallel connection, install external relay and the operation should be performed through the contact of relay.
5. The ambient temperature should be within the range of applicable temperature described in specifications. In addition, avoid using motor valve in environment where there is excessive humidity, dust, corrosive gas or explosive gas.
6. Install steam trap on piping if the valve is used for steam.
7. When the fluid is liquid, the pressure in pipe may increase due to thermal expansion caused by ambient temperature when valve is closed. In such cases, it is recommended to install relief vale to protect machine (see Fig. 3).
8. Make sure the arrow mark on motor valve match with the direction of flow of fluid.
9. Leave some space for dissembling and maintenance.
10. Fix and support piping properly to prevent motor valve from being damaged due to weight of piping, excessively large stress, bending force or vibration.
11. Discharge drain or apply thermal insulation if there is risk of freezing.

Fig.2 Direction of installation of ML motor valve

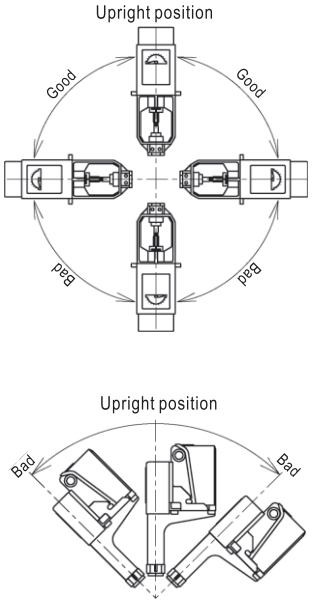

Fig.3 Relief valve installation

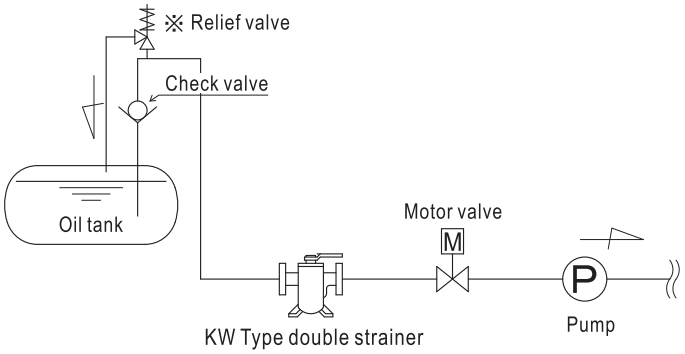

※Install relief valve if pressure rise due to thermal expansion or other factors is anticipated.

CYLINDER VALVES

15

Cylinder valves are self-operated valves to open and close the discs by remote and automatic control using 3-way solenoid switch off valve as pilot valve and supplying air pressure to the actuating part of the cylinder valves.

Main features:

- Compact and light to handle easily
- Simple constructions
- Easy maintenance
- Durable even for frequent operations
- No need for lubrication.

Model name	End connection	Size	Applicable pressure(MPa)	Actuating air pressure(MPa)	Materials		Page
					Body	Trim	
COS-1,1H	Screwed	10~65(⅜″~2½″)	0~1.0	0.3~0.7	Cast bronze or Stainless steel	Stainless steel with Teflon tip	270
CCS-1,1H							
COF-1,1H	Flanged	15~80(½″~3″)	0~1.0	0.3~0.7	Cast bronze or Stainless steel	Stainless steel with Teflon tip	271
CCF-1,1H							
CP53-FS	Flanged	15~25(½″~1″)	Max. 1.0	0.3~0.7	Cast iron	Cast bronze	272
CP85-FS		32~50(1¼″~2″)					
CP125-FS		65~100(2½″~4″)					

COS/CCS-1,1H Type Cylinder Valve

Piston type

Cylinder valves that open or close by switching operating pressure of air, suitable for applications requiring frequent operation or environment with explosive atmosphere where electricity needs to be avoided.

COS, CCS Type series are cylinder valves with a variety of models that are different in operation, connecting method, and material.

FEATURES

- Compact, light weight.
- Wide range of applicable pressure.
- A variety of models for different conditions.

SPECIFICATIONS

Model name			COS-1		CCS-1		COS-1H		CCS-1H	
Code name			COS1-W	COS1-V	CCS1-W	CCS1-V	COS1H-W	COS1H-V	CCS1H-W	CCS1H-V
Body part	Operation		Air to open		Air to close		Air to open		Air to close	
	Size(mm)		10~65	10~50	10~65	10~50	10~65	10~50	10~65	10~50
	Applicable fluid		Water, hot water, air & oils(kerosene, diesel oil & A class heavy oil, level.)*				Steam, hot water & oils*			
	Fluid temperature		5~100℃				Max. 180℃(For hot water:Max. 100℃)			
	Fluid viscosity		Max. 50cSt				—			
	Applicable pressure		0~1.0MPa							
	Materials	Body	Cast bronze	Stainless steel	Cast bronze	Stainless steel	Cast bronze	Stainless steel	Cast bronze	Stainless steel
		Trim	Stainless steel with Teflon tip							
	End connection		Screwed JIS Rc							
	Valve body pressure test		Hydraulic 1.5MPa							
Actuating part	Type		Single action type(Spring-return)							
	Materials		Cast aluminum							
	Actuating air pressure		0.3~0.7MPa							
	Air tight test		0.9MPa(By air pressure)							

* If there is any local regulation for fuel oil or diesel oil, confirm the body materials according to the regulation.

DIMENSIONS(Body materials Cast bronze)

(mm)

Size	d	L	G	COS-1		CCS-1		COS-1H		CCS-1H		Cv value	Mass (kg)
				H	Ha	H	Hb	H	Ha	H	Hb		
10(⅜″)	⅜″	63	15	171	89	167	139	242	160	238	210	3	2
15(½″)	½″	63	15	171	89	167	139	242	160	238	210	4.5	2
20(¾″)	¾″	80	18	176	93	172	143	247	164	243	214	7.5	2
25(1″)	1″	90	22	183	99	179	149	255	171	250	221	11	2.5
32(1¼″)	1¼″	106	27	190	105	186	155	261	176	257	226	17	3
40(1½″)	1½″	118	30	193	108	189	158	264	179	260	229	23	4
50(2″)	2″	140	37	208	122	204	172	280	194	275	244	35	5.5
65(2½″)	2½″	160	45	238	140	226	190	309	211	297	261	50	8

* Contact our local agent for dimension of valve body with stainless steel.



COS-1,CCS-1 Type



COS-1H, CCS-1H Type

CONSTRUCTION

COS-1 Type

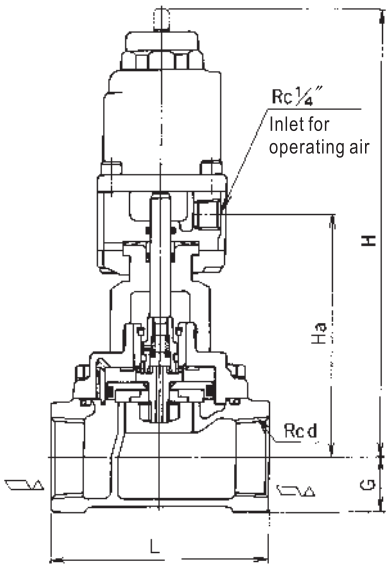

Drive unit of CCS-1,1H Type

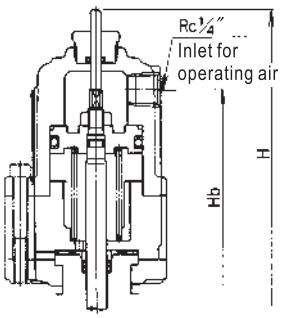

Gland of COS/CCS-1H Type

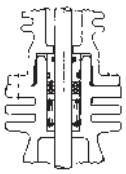

COF/CCF-1,1H Type Cylinder Valve

Piston type

Flange type cylinder valves that open or close by switching operating pressure of air, suitable for applications requiring frequent operation or environment with explosive atmosphere where electricity needs to be avoided.

COF, CCF Type series are cylinder valves with a variety of models that are different in operation, connecting method, and material.

FEATURES

- Compact, light weight.
- Wide range of applicable pressure.
- A variety of models for different conditions.

SPECIFICATIONS

Model name			COF-1		CCF-1		COF-1H		CCF-1H	
Code name*2.			COF1-W	COF1-V	CCF1-W	CCF1-V	COF1H-W	COF1H-V	CCF1H-W	CCF1H-V
Body part	Operation		Air to open		Air to close		Air to open		Air to close	
	Size(mm)		15~80	15~50	15~80	15~50	15~80	15~50	15~80	15~50
	Applicable fluid		Water, hot water, air & oils(kerosene, diesel oil & A class heavy oil level.)*1.				Steam, hot water & oils*1.			
	Fluid temperature		5~100℃				Max. 180℃(For hot water:Max. 100℃)			
	Fluid viscosity		Max. 50cSt				—			
	Applicable pressure		0~1.0MPa							
	Materials	Body	Cast bronze*2.	Stainless steel	Cast bronze*2.	Stainless steel	Cast bronze*2.	Stainless steel	Cast bronze*2.	Stainless steel
		Trim	Stainless steel with Teflon tip							
	End connection		Flanged JIS 10KFF							
	Valve body pressure test		Hydraulic 1.5MPa							
Actuating part	Type		Single action type(Spring-return)							
	Materials		Cast aluminum							
	Actuating air pressure		0.3~0.7MPa							
	Air tight test		0.9MPa(By air pressure)							

*1. If there is any local regulation for fuel oils or diesel oil, contirm the body materials according to the regulation.
*2. The body of size 80mm model is made of cast iron. The product code names of COF-1, CCF-1, COF-1H, and CCF-1H model name are COF1-S, CCF1-S, COF1H-S, and CCF1H-S respectively.

DIMENSIONS(Body materials Cast bronze)

(mm)

Size	L	G	COF-1		CCF-1		COF-1H		CCF-1H		Cv value	Mass (kg)
			H	Ha	H	Hb	H	Ha	H	Hb		
15(½″)	112	21	171	89	167	139	242	160	238	210	4.5	3.5
20(¾″)	118	24	176	93	172	143	247	164	243	214	7.5	4
25(1″)	140	27	183	99	179	149	255	171	250	221	11	6
32(1¼″)	150	32	190	105	186	155	261	176	257	226	17	7
40(1½″)	160	35	193	108	189	158	264	179	260	229	23	8
50(2″)	190	41	208	122	204	172	280	194	275	244	35	9
65(2½″)	212	50	238	140	226	190	309	211	297	261	50	15
80(3″)	290	50	258	160	246	210	329	231	317	281	70	26.5

* Contact our local agent for dimension of valve body with stainless steel.

Flange code JIS 10KFF



COF-1,CCF-1 Type



COF-1H, CCF-1H Type

CONSTRUCTION

COF-1 Type

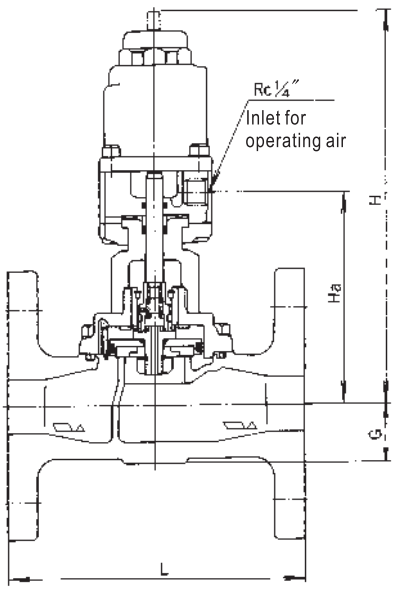

Drive unit of CCF-1, 1H Type

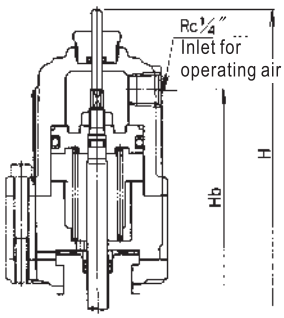

Gland of COF/CCF-1H Type

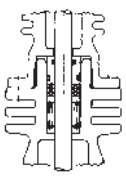

Note:Depending on size, the structure may vary.

CP-FS Type Cylinder Valve

Single-seat, 2-way valve

ON-OFF valve that can open or close by switching operating air pressure through 3-way solenoid valve and then supplying pressure to cylinder valve or discharge air. The drive unit of standard model is single action type, while other models have double action that is to be opeated by 4-way or 5-way air pressure.



SPECIFICATIONS

Model name		CP53-FS		CP85-FS		CP125-FS	
Code name		CP53FS-BD	CP53FS-BS	CP85FS-BD	CP85FS-BS	CP125FS-BD	CP125FS-BS
Size		15~25(½″~1″)		32~50(1¼″~2″)		65~100(2½″~4″)	
Applicable fluid		Water, oils*1, hot water & gases	Steam	Water, oils*1, hot water & gases	Steam	Water, oils*1, hot water & gases	Steam
Fluid temperature		100℃ or less	180℃ or less	100℃ or less	180℃ or less	100℃ or less	180℃ or less
Ambient temperature		−10~60℃					
Body part	Rated pressure	1.0MPa					
	Disc type	Two-way single seated valve					
	Leakage allowance	Less than 0.01% of rated flow					
	Operation	Air to close(Direct plug), Air to open(Reverse plug)					
	Materials	Body(Cast iron), Trim(Cast bronze)*2,*3.					
	End connection	Flanged JIS 10KFF					
	Pressure test	Hydraulic 1.5MPa					
Actuating part	Type	Single action type (Spring-return)*4.					
	Materials	Cast aluminum					
	Actuating air pressure	0.3~0.7MPa					
	Air tight test	1.5 times of actuating air pressure. By air pressure					

* 1. If there is any local regulation for fuel oils or diesel oil, confirm the body materials according to the regulation.
* 2. For models with trim parts made of stainless steel, please contact our agent in your area.
* 3. For models with Teflon disc, please contact our agent in your area.
* 4. Double action is available upon your request.

OPERATION & FLOW DIRECTION

Type	Direct acting · Direct plug		Reverse acting · Reverse plug	
	At discharge-Open	At pressurized-Closed	At discharge-Closed	At pressurized-Open
Operation	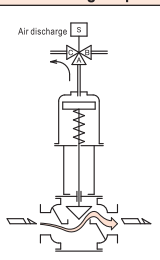	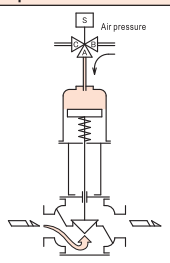	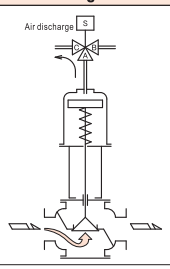	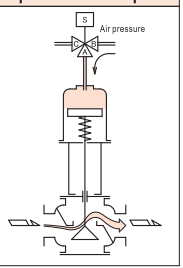

CONSTRUCTION

CP85-FS Type(Reverse plug)

The structure of CP125-FS Type is slightly different from the drawing.

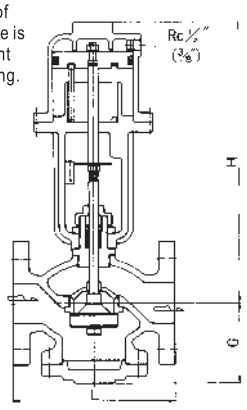

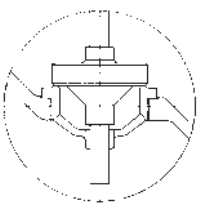

(Direct plug)

DIMENSIONS AND OTHERS

(mm)

Model name	Size	Dimensions					Mass (kg)	Cylinder capacity(ℓ)		Cv value
		L	Direct acting		Reverse acting			Direct acting	Reverse acting	
			G	H	G	H				
CP53-FS	15(½″)	112	51	318	62	288	5	0.09	0.10	3.6
	20(¾″)	125	56	320	64	293	5.5	0.09	0.10	6.4
	25(1″)	140	61	325	69	298	7	0.09	0.10	10
CP85-FS	32(1¼″)	160	67	380	75	355	11.5	0.26	0.29	16
	40(1½″)	180	72	398	96	360	13.5	0.28	0.29	25
	50(2″)	200	82	408	100	370	17.5	0.28	0.29	40
CP125-FS	65(2½″)	270	120	516	120	516	42	0.71	0.74	67
	80(3″)	290	141	535	141	535	50	0.79	0.82	102
	100(4″)	350	160	555	160	555	63	0.87	0.82	160

Flange code JIS10KFF

ACTUATING AIR PRESSURE AND DIFFERENTIAL PRESSURE LIMIT

(MPa)

Model name	Size	Actuating air pressure									
		0.3		0.4		0.5		0.6		0.7	
		Direct acting	Reverse acting	Direct acting	Reverse acting	Direct acting	Reverse acting	Direct acting	Reverse acting	Direct acting	Reverse acting
CP53-FS	15(½″)	0.45	0.90	0.90	1.0	1.0	1.0	1.0	1.0	1.0	1.0
	20(¾″)	0.30	0.60	0.65	1.0	0.95	1.0	1.0	1.0	1.0	1.0
	25(1″)	0.25	0.50	0.55	0.90	0.80	1.0	1.0	1.0	1.0	1.0
CP85-FS	32(1¼″)	0.60	1.0	1.0	1.0	1.0	1.0	1.0	1.0	1.0	1.0
	40(1½″)	0.45	0.70	0.75	1.0	1.0	1.0	1.0	1.0	1.0	1.0
	50(2″)	0.30	0.45	0.55	0.75	0.75	1.0	1.0	1.0	1.0	1.0
CP125-FS	65(2½″)	0.40	0.60	0.70	0.95	0.95	1.0	1.0	1.0	1.0	1.0
	80(3″)	0.30	0.40	0.50	0.65	0.70	0.90	0.85	1.0	1.0	1.0
	100(4″)	0.20	0.25	0.30	0.40	0.45	0.60	0.60	0.75	0.70	0.90

REFERENCE DATA 16

Items	Page
Units Conversion Table	274
SI Unit Conversion Table	276
Saturated Steam Table	278
Physical Property of Gases and Liquids	279
Viscosity of Liquids	280
Pressure Rating for Ferrous Material Pipe Flanges	281
Pressure Rating for Copper Alloy Material Pipe Flanges	284
Data for Sizing	285
Data for Sizing (Steam)	286
Data for Sizing (Air)	287
Data for Sizing (Water)	288
Velocity in Pipes	289
Water Head Loss of Pipe Line	291
Accumulated Drain at Steam Pipe Line	292
Carbon Steel Pipes for Ordinary Piping and Pressure Service	293
Anti-Corrosion Materials List/Materials For Critical Parts	294
Code Name	296

Units Conversion Table

LENGTH

cm	m	km	in	ft
1	0.01	0.0_41	0.3937	0.0328
100	1	0.001	39.371	3.2809
100,000	1,000	1	39,371	3,280.9
2.54	0.02540	0.0_4254	1	0.08333
30.48	0.3048	0.0_33048	12	1
30.30	0.30303	0.0_33030	11.9303	0.9942

AREA

cm^2	m^2	in^2	ft^2
1	0.0_31	0.1550	0.001076
1×10^4	1	1,550.1	10.7643
6.4514	0.0_36451	1	0.006944
929	0.0929	144	1
918.27	0.09183	142.34	0.9885

VOLUME

dm^3 or L	m^3 or kL	ft^3	UK gal	US gal
1	0.001	0.03532	0.220	0.2642
1,000	1	35.317	219.95	264.19
28.315	0.02832	1	6.2279	7.4806
4.5465	0.0_24547	0.1606	1	1.2011
3.7852	0.0_23785	0.1337	0.8325	1
180.39	0.18039	6.3707	39.676	47.656
27.826	0.02783	0.9827	6.1203	7.3514

MASS

g	kg	t(tonne)(F)	lb	UK ton	US ton
1	0.001	0.0_51	0.002205	0.0_6984	0.0_31102
1,000	1	0.001	2.2046	0.0_3984	0.0_21102
1×10^6	1,000	1	2,204.6	0.9842	1.1023
453.6	0.4536	0.0_34536	1	0.0_3446	0.0_251
1,016,047	1,016.05	1.01605	2,240	1	1.12
907,185	907.185	0.90719	2,000	0.89286	1
3,750	3.75	0.00375	8.2673	0.0_23691	0.0_24134
600	0.6	0.0_36	1.3228	0.0_35905	0.0_36613

VISCOSITY

Poise=g/cm·s(CGS Unit)	centipoise.cP	kg/m·s	kg/m·h	lb/ft·s
1	100	0.1	360	0.0672
0.01	1	0.001	3.6	0.000672
10	1,000	1	3,600	0.672
0.00278	0.278	0.0_3278	1	0.000187
14.88	1,488	1.488	5,356.8	1

VELOCITY

m/s	m/h	km/h	ft/s	ft/min	mile/h
1	3,600	3.6	3.281	196.85	2.2370
0.0_32778	1	0.001	0.0_39114	0.05468	0.0_36214
0.2778	1,000	1	0.9114	54.682	0.6214
0.3048	1,097.25	1.0973	1	60	0.68182
0.0_25080	18.287	0.01829	0.01667	1	0.01136
0.4470	1,609.31	1.6093	1.4667	88	1

FLOW

L/s	L/min	m^3/min	m^3/h	m^3/s	UK gal/min	US gal/min
1	60	0.06	3.6	0.001	13.197	15.8514
0.01667	1	0.001	0.06	0.0_41667	0.2200	0.2642
16.67	1,000	1	60	0.01667	219.95	264.19
0.2778	16.67	0.01667	1	0.0_32778	3.6658	4.4032
1000	60,000	60	3,600	1	13,197	15,851.4
0.07578	4.546	0.0_24546	0.2728	0.0_47578	1	1.2011
0.06309	3.785	0.0_23785	0.2271	0.0_46309	0.8325	1

PRESSURE

lb/in^2 or PSI	Pa	kPa	MPa	kgf/cm^2	bar	atm	mmHg or Torr	mmH_2O
1	6,894.8	6.8948	0.0_26895	0.07031	0.068678	0.06804	51.714	702.99
0.0_314504	1	0.0_21	0.0_51	0.0_410197	0.0_41	0.0_59869	0.0_27501	0.10197
0.14504	1,000	1	0.001	0.010197	0.01	0.0_29869	7.501	101.97
145.03	1,000,000	1,000	1	10.1970	10.000	9.8690	7,501	101,970
14.223	98,067	98.067	0.098067	1	0.98067	0.96784	735.56	10,000
14.561	100,000	100	0.10000	1.01970	1	0.98690	750.10	10,197
14.697	101,330	101.33	0.10133	1.0332	1.0133	1	760.06	10,332
0.019337	133.32	0.13332	0.0_313332	0.0_213594	0.0_213332	0.0_213157	1	13.594
0.0_214225	9.8068	0.0_298068	0.0_598068	0.0_31	0.0_49869	0.0_496783	0.073561	1

Units Conversion Table

STRESS

Pa	MPa or N/mm^2	kg/mm^2	kgf/cm^2
1	0.000001	$0.0_6101972$	$0.0_4101972$
1,000,000	1	0.101972	10.1972
9,806,650	9.80665	1	100
98,066.5	0.0980665	0.01	1

POWER

N	dyn	kgf	lbf
1	100,000	0.101972	0.22480894
0.00001	1	$0.0_5101972$	$0.0_522480894$
9.80665	980,665	1	2.2046226
4.4482216	444,822.16	0.45359237	1

WORK ENERGY CALORIE

J	kW·h	kgf·m	kcal
1	$0.0_6277778$	0.101972	0.000238889
3,600,000	1	367,098	860
9.80665	$0.0_5272407$	1	0.00234270
4,186.05	0.00116279	426.858	1

TEMPERATURE

From ℃ to ℉	From ℉ to ℃
9/5× ℃+32°	5/9×(°F−32°)

■ COMPARISON BETWEEN SI UNIT AND CONVENTIONAL SYSTEM OF UNITS

Physical quantity	SI units	Unit which can be used together with SI units	Conventional system of units	Factor for converting to SI units	Remarks
Plane angle	rad	° ′ ″		— 1.74533×10^{-2} rad 2.90888×10^{-4} rad 4.84814×10^{-6} rad	$1°=(\pi/180)$rad $1'=(1/60)°$ $1''=(1/60)'$
Mass	kg	t		— 1×10^3kg	
Density	kg/m^3	kg/L t/m^3		— 1×10^{-3}kg/m^3 1×10^3kg/m^3	
Force	N		dyn kgf	— 1×10^{-5} N 9.80665N	
Pressure	Pa	bar	mmAq,mmH_2O mAq,mH_2O kgf/cm^2 mmHg atm	— 1×10^5Pa 9.80665Pa 9.80665×10^3Pa 9.80665×10^4Pa 1.3322×10^2Pa 1.0135×10^5Pa	To be used for fluid pressure
Viscosity	Pa·s	P		1×10^{-1}Pa·S	
Kinematic viscosity	m^2/s	St		1×10^{-4} m^2/S	
Energy Work Heating value Electric energy	J		kcal kgf·m kW·h	— 4.18605kJ 9.80665J 3.6MJ	IT, calorific value shown in "Weight and Measure Act": $1kcal_{IT}$=4.18680kJ (according to International Steam Table)
Temperature	K ℃				Thermodynamic temperature, Celsius scale T[K]=273.15+t [℃]
Temperature difference	K ℃				Previously described as "deg"
Specific heat Specific entropy	J/(kg·K)		kcal/kg·℃	— 4.18605kJ/(kg·K)	
Specific enthalpy Specific latent heat	J/kg		kcal/kg	— 4.18605kJ/kg	
Stress	Pa N/ m^2		kgf/ m^2	9.80665Pa	

SI Unit Conversion Table (Actual Number)

"SI" is the abbreviation of International System of Units (or Le Systeme International d'Unites) agreed upon at the general meeting of International Committee of Weights and Measures held in 1960. In Japan, according to the new Weights and Measures Act established in 1992 and enacted in 1992, weight and measure units used for business and certification have been standardized to SI.

■ UNITS TRANSITED TO SI UNITS

Item	Transited unit (symbol)	SI unit (symbol)	Conversion (see Note 1)
Pressure	Weight (kg)/m^2 (kgw/m^2, kgf/m^2, kg/m^2) Mercury column (m) (mHg) (see Note 2) Water column (m) (mH_2O, mAq) Torr (see Note 3)	Pascal (Pa)	1kgf/m^2 ≒ 9.8Pa 1mHg ≒ 133kPa 1mH_2O ≒ 9.8kPa 1Torr ≒ 133Pa
Power	Weight (kg) (kgw, kgf)	Newton (N)	1kgf ≒ 9.8N
Moment	weight (kg)/m (kgw·m, kgf·m, kg·m)	Newton (N·m)	1kgfm ≒ 9.8N·m
Stress	Weight (kg)/m^2 (kgf·m^2)	Pascal (Pa)	1kgf/m^2 ≒ 9.8Pa
Calorie	Calorie (cal) (Note 4)	Joule (J)	1cal ≒ 4.2J
Length	Micron (μ)	Meter (m)	1μ=1μm

Note:
1.Coefficient for unit conversion: 9.8→9.80665, 133→133.322, 4.2→4.18605.
2.Can be used for measuring blood pressure.
3.Can be used for medical purpose.
4.Can be used for measuring nutrition content.

■ MAIN PREFIXES REPRESENTING INTEGRAL POWERS OF 10

Power	Prefix	Symbol	Power	Prefix	Symbol
10^6	Mega	M	10^{-2}	Centi	c
10^3	Kilo	k	10^{-3}	Mili	m
10^2	Hecto	h	10^{-6}	Micro	μ

■ CONVERSION TABLE FOR PRESSURE UNIT (PRIOR UNIT → SI UNI)

※1. Simple conversion: 1.0 kgf/cm^2 =0.0980665MPa=98.0665 kPa. The value is rounded.
※2. Conversion calculation for safety and relief valves: 1.0 kgf/cm^2 =0.0980665MPa. Fraction is discarded.
(The value in SI unit should not be larger than pressure value in conventional unit.)

NEGATIVE PRESSURE

Conventional unit	SI unit (simple conversion ※1)
25 Torr	3.3kPa·A
−50mmAq	−0.49kPa
−50mmHg	−6.7kPa
−100mmHg	−13kPa
−200mmHg	−27kPa
−400mmHg	−53kPa
−600mmHg	−80kPa

POSITIVE PRESSURE

Conventional unit	SI unit (simple conversion ※1)
0.01kgf/cm^2(100mmAq)	1.0kPa
0.02kgf/cm^2(200mmAq)	2.0kPa
0.03kgf/cm^2(300mmAq)	2.9kPa
0.04kgf/cm^2(400mmAq)	3.9kPa
0.05kgf/cm^2(500mmAq)	4.9kPa
0.06kgf/cm^2(600mmAq)	5.9kPa
0.07kgf/cm^2(700mmAq)	6.9kPa
0.08kgf/cm^2(800mmAq)	7.8kPa
0.09kgf/cm^2(900mmAq)	8.8kPa

SI Units Conversion Table (Actual Number)

■ PRESSURE UNIT CONVERSION TABLE (from conventional unit to SI unit)

※1. Simple conversion: 1.0 kgf/cm²=0.0980665 MPa=98.0665 kPa. The value is rounded.
※2. Conversion calculation for safety and relief valves: 1.0 kgf/cm²=0.0980665 MPa. Fraction is discarded.
(The value in SI unit should not be larger than pressure value in conventional unit.)

Conventional unit kgf /cm²	SI unit MPa	
	Simple conversion*1.	Conversion for safety/relief valve*2
0.1	0.010	
0.15	0.015	
0.2	0.020	
0.3	0.029	
0.35	0.034	0.0343
0.4	0.039	0.0392
0.5	0.049	0.0490
0.6	0.059	0.0588
0.7	0.069	0.0686
0.8	0.078	0.0784
0.9	0.088	0.0882
1.0	0.10	0.098
1.1	0.11	0.107
1.2	0.12	0.117
1.3	0.13	0.127
1.4	0.14	0.137
1.5	0.15	0.147
1.6	0.16	0.156
1.7	0.17	0.166
1.8	0.18	0.176
1.9	0.19	0.186
2.0	0.20	0.196
2.1	0.21	0.205
2.2	0.22	0.215
2.3	0.23	0.225
2.4	0.24	0.235
2.5	0.25	0.245
2.6	0.25	0.254
2.7	0.26	0.264
2.8	0.27	0.274
2.9	0.28	0.284
3.0	0.29	0.294
3.1	0.30	0.304
3.2	0.31	0.313
3.3	0.32	0.323
3.4	0.33	0.333
3.5	0.34	0.343
3.6	0.35	0.353
3.7	0.36	0.362
3.8	0.37	0.372
3.9	0.38	0.382

Conventional unit kgf /cm²	SI unit MPa	
	Simple conversion*1.	Conversion for safety/relief valve*2
4.0	0.39	0.392
4.1	0.40	0.402
4.2	0.41	0.411
4.3	0.42	0.421
4.4	0.43	0.431
4.5	0.44	0.441
4.6	0.45	0.451
4.7	0.46	0.460
4.8	0.47	0.470
4.9	0.48	0.480
5.0	0.49	0.490
5.1	0.50	0.500
5.2	0.51	0.509
5.3	0.52	0.519
5.4	0.53	0.529
5.5	0.54	0.539
5.6	0.55	0.549
5.7	0.56	0.558
5.8	0.57	0.568
5.9	0.58	0.578
6.0	0.59	0.588
6.1	0.60	0.598
6.2	0.61	0.608
6.3	0.62	0.617
6.4	0.63	0.627
6.5	0.64	0.637
6.6	0.65	0.647
6.7	0.66	0.657
6.8	0.67	0.666
6.9	0.68	0.676
7.0	0.69	0.686
7.1	0.70	0.696
7.2	0.71	0.706
7.3	0.72	0.715
7.4	0.73	0.725
7.5	0.74	0.735
7.6	0.75	0.745
7.7	0.76	0.755
7.8	0.76	0.764
7.9	0.77	0.774

Conventional unit kgf /cm²	SI unit MPa	
	Simple conversion*1.	Conversion for safety/relief valve*2
8.0	0.78	0.784
8.1	0.79	0.794
8.2	0.80	0.804
8.3	0.81	0.813
8.4	0.82	0.823
8.5	0.83	0.833
8.6	0.84	0.843
8.7	0.85	0.853
8.8	0.86	0.862
8.9	0.87	0.872
9.0	0.88	0.882
9.1	0.89	0.892
9.2	0.90	0.902
9.3	0.91	0.912
9.4	0.92	0.921
9.5	0.93	0.931
9.6	0.94	0.941
9.7	0.95	0.951
9.8	0.96	0.961
9.9	0.97	0.970
10.0	0.98	0.980
10.5	1.03	1.029
11	1,08	1.078
12	1.18	1.176
13	1.27	1.274
14	1.37	1.372
15	1.47	1.470
17.5	1.72	1.716
18	1.77	1.765
19	1.86	1.863
20	1.96	1.961
22	2.16	2.157
24	2.35	2.353
25	2.45	2.451
27	2.65	2.647
30	2.94	2.941
32	3.14	
40	3.92	
45	4.41	
50	4.90	
66	6.47	

Saturated Steam Table

Absolute pressure (MPa·A)	Steam temperature (℃)	Volume of 1kg water before evaporation (ℓ)	Volume of 1kg steam (m^3)	Weight of 1m^3 steam (kg)	Calorie of 1kg steam (kJ)			Absolute pressure (MPa·A)	Steam temperature (℃)	Volume of 1kg water before evaporation (ℓ)	Volume of 1kg steam (m^3)	Weight of 1m^3 steam (kg)	Calorie of 1kg steam (kJ)		
					Calorie of water h	Latent heat L	Total H=h+L						Calorie of water h	Latent heat L	Total H=h+L
0.010	45.83	1.0102	14.67	0.0681	191.8	2392.9	2584.8	0.740	167.21	1.1110	0.26	3.8655	706.9	2057.4	2764.3
0.015	54.00	1.0140	10.03	0.0998	226.0	2373.2	2599.2	0.760	168.30	1.1123	0.25	3.9645	711.7	2053.7	2765.4
0.020	60.09	1.0172	7.65	0.1307	251.5	2358.4	2609.9	0.780	169.37	1.1137	0.25	4.0634	716.4	2050.1	2766.4
0.025	64.99	1.0199	6.20	0.1612	272.0	2346.4	2618.4	0.80	170.41	1.1150	0.24	4.1622	720.9	2046.5	2767.5
0.030	69.12	1.0223	5.23	0.1912	289.3	2336.1	2625.4	0.85	172.95	1.1182	0.23	4.4089	732.0	2037.9	2769.9
0.035	72.71	1.0245	4.53	0.2210	304.3	2327.2	2631.5	0.90	175.36	1.1214	0.22	4.6552	742.6	2029.5	2772.1
0.040	75.89	1.0265	3.99	0.2504	317.7	2319.2	2636.9	0.95	177.67	1.1244	0.20	4.9012	752.8	2021.4	2774.2
0.045	78.74	1.0284	3.58	0.2796	329.6	2312.0	2641.7	1.00	179.88	1.1274	0.19	5.1469	762.6	2013.6	2776.2
0.050	81.35	1.0301	3.24	0.3086	340.6	2305.4	2646.0	1.05	182.02	1.1303	0.19	5.3923	772.0	2006.0	2778.0
0.060	85.95	1.0333	2.73	0.3661	359.9	2293.6	2653.6	1.10	184.07	1.1331	0.18	5.6375	781.1	1998.5	2779.7
0.070	89.96	1.0361	2.36	0.4229	376.8	2283.3	2660.1	1.15	186.05	1.1359	0.17	5.8825	789.9	1991.4	2781.3
0.080	93.51	1.0387	2.09	0.4792	391.7	2274.0	2665.8	1.20	187.96	1.1386	0.16	6.1274	798.4	1984.3	2782.7
0.090	96.71	1.0412	1.87	0.5350	405.2	2265.6	2670.9	1.25	189.82	1.1412	0.16	6.3723	806.7	1977.5	2784.2
0.100	99.63	1.0434	1.69	0.5904	417.5	2257.9	2675.4	1.30	191.61	1.1439	0.15	6.6170	814.7	1970.7	2785.4
0.120	104.81	1.0476	1.43	0.7002	439.4	2244.1	2683.4	1.35	193.35	1.1464	0.15	6.8616	822.5	1964.2	2786.7
0.140	109.32	1.0521	1.24	0.8089	458.4	2231.9	2690.3	1.40	195.04	1.1489	0.14	7.1063	830.1	1957.7	2787.8
0.160	113.32	1.0547	1.09	0.9165	475.4	2220.9	2696.2	1.45	196.69	1.1514	0.14	7.3509	837.5	1951.5	2788.9
0.180	116.93	1.0579	0.98	1.0233	490.7	2210.8	2701.5	1.5	198.29	1.1539	0.13	7.5955	844.7	1945.2	2789.9
0.200	120.23	1.0608	0.89	1.1294	504.7	2201.6	2706.3	1.6	201.37	1.1586	0.12	8.0850	858.6	1933.2	2791.7
0.220	123.27	1.0636	0.81	1.2348	517.6	2193.0	2710.6	1.7	204.31	1.1633	0.12	8.5747	871.8	1921.5	2793.4
0.240	126.09	1.0663	0.75	1.3397	529.6	2184.9	2714.5	1.8	207.11	1.1678	0.11	9.0648	884.6	1910.3	2794.8
0.260	128.73	1.0688	0.69	1.4440	540.9	2177.3	2718.2	1.9	209.80	1.1723	0.11	9.5554	896.8	1899.3	2796.1
0.280	131.20	1.0712	0.65	1.5479	551.4	2170.1	2721.5	2.0	212.37	1.1766	0.10	10.047	908.6	1888.6	2797.2
0.300	133.54	1.0735	0.61	1.6514	561.4	2163.2	2724.7	2.1	214.85	1.1809	0.09	10.539	920.0	1878.2	2798.2
0.320	135.75	1.0757	0.57	1.7544	570.9	2156.7	2727.6	2.2	217.24	1.1850	0.09	11.031	931.0	1868.1	2799.1
0.340	137.86	1.0779	0.54	1.8572	579.9	2150.4	2730.3	2.3	219.55	1.1892	0.09	11.525	941.6	1858.2	2799.8
0.360	139.86	1.0799	0.51	1.9595	588.5	2144.4	2732.9	2.4	221.78	1.1932	0.08	12.019	951.9	1848.5	2800.4
0.380	141.78	1.0819	0.49	2.0616	596.8	2138.6	2735.3	2.5	223.94	1.1972	0.08	12.515	962.0	1839.0	2800.9
0.400	143.62	1.0839	0.46	2.1635	604.7	2133.0	2737.6	2.6	226.04	1.2011	0.08	13.011	971.7	1829.6	2801.4
0.420	144.39	1.0858	0.44	2.2650	612.3	2127.5	2739.8	2.7	228.07	1.2050	0.07	13.509	981.2	1820.5	2801.7
0.440	147.09	1.0876	0.42	2.3663	619.6	2122.3	2741.9	2.8	230.05	1.2088	0.07	14.008	990.5	1811.5	2802.0
0.460	148.73	1.0894	0.41	2.4674	626.7	2117.2	2743.9	2.9	231.97	1.2126	0.07	14.508	999.5	1802.6	2802.2
0.480	150.31	1.0911	0.39	2.5683	633.5	2112.2	2745.7	3.0	233.84	1.2163	0.07	15.009	1008.4	1793.9	2802.3
0.500	151.84	1.0928	0.37	2.6690	640.1	2107.4	2747.5	3.2	237.45	1.2237	0.06	16.016	1025.4	1776.9	2802.3
0.520	153.33	1.0945	0.36	2.7695	646.5	2102.7	2749.3	3.5	242.54	1.2345	0.06	17.536	1049.8	1752.2	2802.0
0.540	154.76	1.0961	0.35	2.8698	652.8	2098.1	2750.9	4.0	250.33	1.2521	0.05	20.101	1087.4	1712.9	2800.3
0.560	156.16	1.0978	0.34	2.9700	658.8	2093.7	2752.5	4.5	257.41	1.2691	0.04	22.708	1122.1	1675.6	2797.7
0.580	157.52	1.0993	0.33	3.0700	664.7	2089.3	2754.0	5	263.91	1.2858	0.04	25.362	1154.5	1639.7	2794.2
0.600	158.84	1.1009	0.32	3.1698	670.4	2085.0	2755.4	6	275.55	1.3187	0.03	30.828	1213.7	1571.3	2785.0
0.620	160.12	1.1024	0.31	3.2696	676.0	2080.9	2756.9	7	285.79	1.3513	0.03	36.532	1267.4	1506.0	2773.5
0.640	161.38	1.1039	0.30	3.3692	681.5	2076.8	2758.2	8	294.97	1.3842	0.02	42.507	1317.1	1442.8	2759.9
0.660	162.60	1.1053	0.29	3.4687	686.8	2072.7	2759.5	9	303.31	1.4179	0.02	48.792	1363.7	1380.9	2744.6
0.680	163.79	1.1068	0.28	3.5680	692.0	2068.8	2760.8	10	310.96	1.4526	0.02	55.428	1408.0	1319.7	2727.7
0.700	164.96	1.1082	0.27	3.6673	697.1	2064.9	2762.0	15	342.13	1.6579	0.01	96.710	1611.0	1004.0	2615.0
0.720	166.10	1.1096	0.27	3.7665	702.0	2061.1	2763.1	20	365.70	2.0370	0.01	170.17	1826.5	591.9	2418.4
								22.12	374.15	3.1700	0.003	315.46	2107.4	0.0	2107.4

Physical Property of Gases and Liquids

Material name	Chemical formula	Molecular weight	Gas			Liquid		
			Adiabatic index (Cp/Cv=*k*)	Density kg/m³ 0℃ 1atm	Specific gravity (air=1)	Specific gravity (water=1)	Specific gravity at ℃	Boiling point
Acrylonitrile	CH_2=CHCN	53.06			1.832	0.8060	20	77.7
Acetylene	HC≡CH	26.04	1.26	1.173	0.907			−83.8
Acetaldehyde	CH_3CHO	44.05	1.14		1.519	0.783	17.8	18.9
Acetone	CH_3COCH_3	58.08				0.791	18.9	56.5
Aniline	$C_6H_5NH_2$	93.13			3.216	1.0217	20.7	184.6
Argon	Ar	39.95	1.67	1.784	1.380	1.65	−232.8	−185.0
Ammonia	NH_3	17.03	1.31	0.771	0.587	0.590	−78.9	−33.5
Isobutane	$(CH_3)_3CH$	58.13	1.10	2.595	2.007	0.557	20	−11.7
Carbon monoxide	CO	28.01	1.40	1.250	0.967	0.814	−194.4	−191.6
Nitrous oxide	N_2O	44.00	1.30	1.978	1.530	1.226	−88.9	−88.57
Ethane	C_2H_6	30.07	1.19	1.356	1.05	0.546	−87.8	−88.6
Ethyl alcohol	C_2H_5OH	46.07	1.13		1.59	0.789	20	78.3
Ethyl benzene	$C_6H_5C_2H_5$	106.17			3.666	0.8672	20	136.15
Ethylene	CH_2=CH_2	28.05	1.24	1.260	0.974	0.566	−102.2	−103.9
Ethylene glycol	$HOCH_2CH_2OH$	62.07			2.143	1.1131	20	197.7
Ethyl chloride	$C_2H_5Cℓ$	64.51	1.19		2.22	0.903	10	12.2
Methyl chloride	$CH_3Cℓ$	50.49	1.20		1.742	0.952	0	−23.9
Hydrogen chloride	Hℓ	36.46	1.41	1.639	1.27			−85.1
Chloride	$Cℓ_2$	70.91	1.36	3.214	2.49	1.56	−33.9	−34.0
Octane	$CH_3(CH_2)_6CH_3$	114.00	1.05		3.94	0.707	20	125.6
Sea water						1.01~1.05	20	
Gasoline						0.75	20	30~210
Air		28.96	1.40	1.293	1			100
Chloroethyl	$C_2H_5OCHCℓCH_3$	108.57			3.749	0.9655	20	98.5
Chloromethyl	$C_2H_5OCH_2Cℓ$	94.54	1.28		3.26	1.0127	20	82.4
Chloroform	$CHCℓ_3$	119.38			4.122	1.4985	15	61.2
Acetic acid	CH_3CO_2H	60.05	1.15		2.071	1.049	20	117.9
Oxygen	O_2	32.0	1.40	1.429	1.105	1.426	−252.2	−182.9
Ethylene oxide	$(C_2H_4)O$	44.05	1.01		1.521	0.8896	6	10.73
Nitric oxide	NO	30.0	1.40	1.340	1.036	1.269	−150.6	−151.8
Nitric acid	HNO_3					1.502	15.6	83.8
Water vapor (100℃)	H_2O	18.02	1.33	0.598	0.463	1.0	3.9	100
Hydrogen	H_2	2.02	1.41	0.0899	0.070	0.0709	−252.8	−252.8
Dowtherm A		165	1.046		5.696	0.997	100	257.8
Nitrogen	N_2	28.01	1.40	1.250	0.967	1.026	−252.2	−195.8
Kerosene						0.80~0.83	15	150~320
Toluene	$C_6H_5CH_3$	92.15	1.09		3.18	0.866	20	111.1
Carbon dioxide	CO_2	44.00	1.29	1.977	1.53	1.101	−37.2	Sublimation
Sulfur dioxide	SO_2	64.06	1.29	2.926	2.264	1.434	0	−10.1
Carbon bisulfide	CS_2	76.14	1.21		2.628	1.263	20	46.7
Fuel oil(Navy heavy)						1.014	15.6	
Fuel oil(No.3)						0.899	15.6	
Fuel oil(No.5 &6)						0.993	15.6	
Butadiene	CH_2=CHCH=CH_2	54.09	1.12	2.485	1.922	0.621	20	−4.4
Butane	C_4H_{10}	58.12	1.10	2.595	2.007	0.579	20	−0.6
Freon 11		137.37	1.14	6.131	4.742	1.494	17.2	23.9
Freon 12		120.92	1.14	5.397	4.174	1.486	−30.0	−29.4
Freon 22		86.48	1.18	3.860	2.985	1.419	−41.1	−40.6
Freon 114		170.93	1.09	1.989	5.90	1.538	−1.1	3.3
Propane	$CH_3CH_2CH_3$	44.09	1.13	2.02	1.56	0.585	−45.0	−42.1
Propylene	CH_3CH=CH_2	42.08	1.15	1.908	1.476	0.609	−47.2	−47.8
Hexane	$CH_3(CH_2)_4CH_3$	86.18	1.06	3.840	2.97	0.659	20	68.9
Helium	He	4.00	1.66	0.1785	0.138			−269
Benzene	C_6H_6	78.12	1.12		2.89	0.879	20	80.0
Methane	CH_4	16.04	1.31	0.717	0.555	0.415	−163.9	−161.5
Methyl alcohol	CH_3OH	32.04	1.20		1.11	0.792	20	64.6
Methylic butane	$(CH_3)_2CHC_2H_5$	72.15	1.08		2.49	0.625	15.6	27.8
Methylic ether	CH_3OCH_3	46.07			1.591	2.091	15.6	
Hydrogen sulfide	H_2S	34.08	1.32	1.539	1.19			−60.1
Sulphuric acid	H_2SO_4					1.834	15.6	340.0

Viscosity of Liquids

TEMPERATURE AND VISCOSITY CURVES FOR OIL

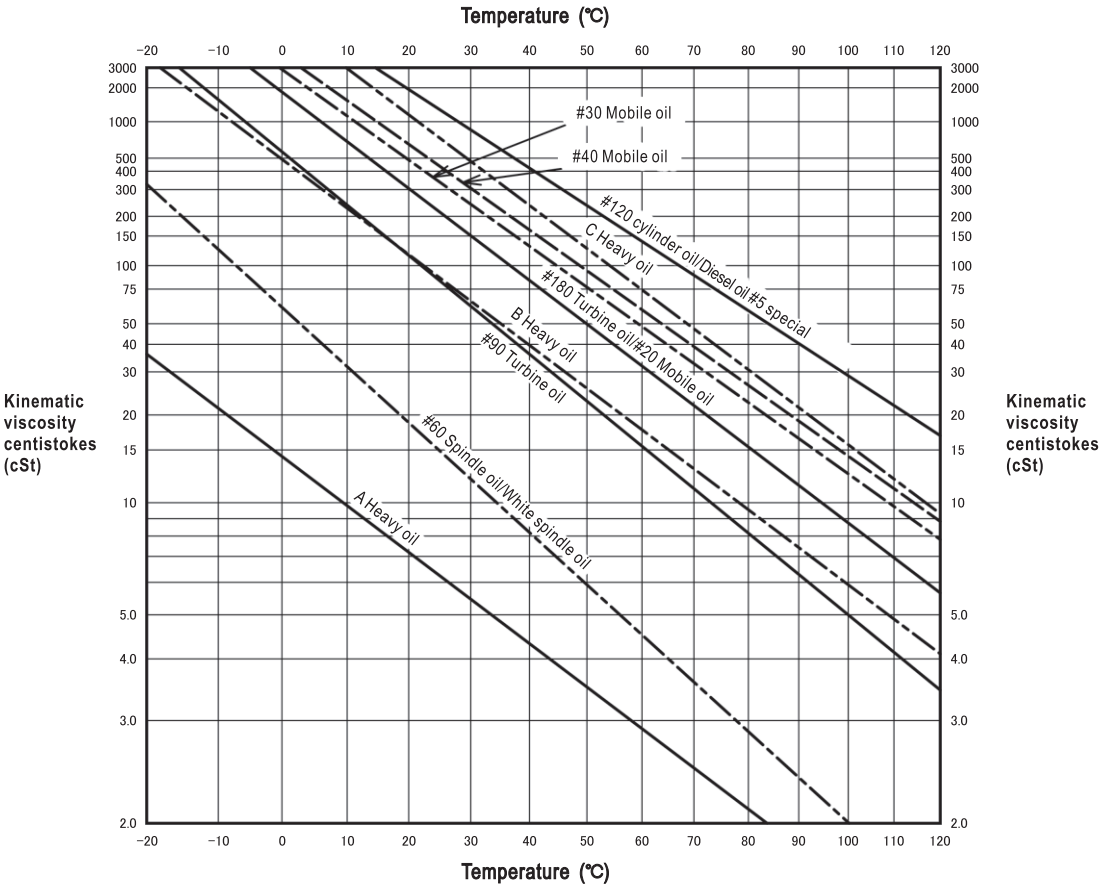

Centi-stokes cSt	Saybolt time, sec. SUU (sec.)	Redwood No.1 time, R″(sec.)	Engler degree E (°)	Centi-stokes cSt	Saybolt time, sec. SUU (sec.)	Redwood No.1 time, R″(sec.)	Engler degree E (°)
2.7	35	32.2	1.18	103	475	419	13.5
4.3	40	36.2	1.32	108	500	441	14.2
5.9	45	40.6	1.46	119	550	485	15.6
7.4	50	44.9	1.60	130	600	529	17.0
8.9	55	49.1	1.75	141	650	573	18.5
10.4	60	53.5	1.88	152	700	617	19.9
11.8	65	57.9	2.02	163	750	661	21.3
13.1	70	62.3	2.15	173	800	705	22.7
14.5	75	67.6	2.31	184	850	749	24.2
15.8	80	71.0	2.42	195	900	793	25.6
17.0	85	75.1	2.55	206	950	837	27.0
18.2	90	79.6	2.68	217	1000	882	28.4
19.4	95	84.2	2.81	260	1200	1058	34.1
20.6	100	88.4	2.95	302	1400	1234	39.8
23.0	110	97.1	3.21	347	1600	1411	45.5
25.0	120	105.9	3.49	390	1800	1587	51
27.5	130	114.8	3.77	433	2000	1763	57
29.8	140	123.6	4.04	542	2500	2204	71
32.1	150	132.4	4.32	650	3000	2646	85
34.3	160	141.1	4.59	758	3500	3087	99
36.5	170	150.0	4.88	867	4000	3526	114
38.8	180	158.8	5.15	974	4500	3967	128
41.0	190	167.5	5.44	1082	5000	4408	142
43.2	200	176.4	5.72	1150	5500	4849	156
47.5	220	194.0	6.28	1300	6000	5290	160
51.9	240	212	6.85	1400	6500	5730	185
56.5	260	229	7.38	1510	7000	6171	199
60.5	280	247	7.95	1630	7500	6612	213
64.9	300	265	8.51	1740	8000	7053	227
70.3	325	287	9.24	1850	8500	7494	242
75.8	350	309	9.95	1960	9000	7934	256
81.2	375	331	10.7	2070	9500	8375	270
86.8	400	353	11.4	2200	10000	8816	284
92.0	425	375	12.1				
97.4	450	397	12.8				

Above figures are converted from kinematic viscosity(cSt) measured at 37.8℃.

Conversion

$$v = \frac{\mu}{\rho}$$

v: Kinematic viscosity (stokes: St, centistokes: cSt)
μ: Absolute viscosity (Poise: P, centipoises: cP)
ρ: Density (g/cm^3)
1 Poise = 100 centipoise
1 Stokes=100 centistokes

SI Conversion Table (SI unit is marked by heavy line)

Viscosity	Pa·S	cP	P
	1	1×10^{3}	1×10
	1×10^{-3}	1	1×10^{-2}
	1×10^{-1}	1×10^{2}	1

Note: 1cP=1mPa·S

Kinematic viscosity	m^2/S	cSt	St
	1	1×10^{6}	1×10^{4}
	1×10^{-6}	1	1×10^{-2}
	1×10^{-4}	1×10^{2}	1

Note:1St=1cm^2/S,1cSt=1mm^2/S

Pressure Rating for Ferrous Material Pipe Flanges

Extracted from JIS B2220-2004

This standard provides specifications on steel flanges (hereinafter referred to as "flanges") for connecting steel pipes, valves, etc. and accessories for stainless piping of common pipes, pressure pipes, high pressure pipes, high-temperature pipes, and steel alloy pipes for steam, air, gas, water and oil.

See Tab.1 "Pressure-Temperature Standard" and Tab. 2 "Symbols of Material Group" for the relationship between temperature and maximum working pressure of fluids. The classification (Ⅰ~Ⅲ) in Tab.1 depends on the class of flange and material group (refer to JIS B2220-2004).

Tab.1 Pressure-Temperature Standard

Nominal pressure	Symbol of material group material specified	Max. working pressure											
		Temperature of fluid											
	Classification	T_L~120			220			300			350		
		Ⅰ	Ⅱ	Ⅲ	Ⅰ	Ⅱ	Ⅲ	Ⅰ	Ⅱ	Ⅲ	Ⅰ	Ⅱ	Ⅲ
5k	001,002,003a	0.7	0.5	0.5	0.6	0.5	—	0.5	0.5	—	—	—	—
	021a,021b,022a,022b	0.7	0.5	0.5	0.6	0.5	—	0.5	0.5	—	—	—	—
	023a,023b	0.7	0.5	0.5	0.6	0.5	—	0.5	0.5	—	—	—	—
10k	001,002,003a	1.4	1.0	1.0	1.2	1.0	—	1.0	1.0	—	—	—	—
	021a,021b,022a,022b	1.4	1.0	1.0	1.2	1.0	—	1.0	1.0	—	—	—	—
	023a,023b	1.4	1.0	1.0	1.2	0.9	—	1.0	0.8	—	—	—	—
16k	002,003a	2.7	1.6	1.6	2.5	1.6	—	2.3	1.6	—	2.1		—
	021a,021b,022a,022b	2.7	1.6	1.6	2.5	1.6	—	2.3	1.6	—	2.1	1.6	—
	023a,023b	2.7	1.6	1.6	2.5	1.6	—	2.3	1.5	—	2.1	1.4	—
20k	002,003a	3.4	2.0	2.0	3.1	2.0	—	2.9	2.0	—	2.6	—	—
	021a,021b,022a,022b	3.4	2.0	2.0	3.1	2.0	—	2.9	2.0	—	2.6	2.0	—
	023a,023b	3.4	2.0	2.0	3.1	2.0	—	2.9	1.9	—	2.6	1.7	—
30k	002,003a	5.1	3.9		4.6	3.9		4.3	3.9		3.9	—	
	013a	5.1	3.9		4.6	3.9		4.3	3.9		3.9	3.9	
	015a	5.1	3.9		4.6	3.9		4.3	3.9		3.9	3.9	
	021a,021b,022a,022b	5.1	3.9	3.9	4.6	3.6	—	4.3	3.4	—	3.9	3.0	—
	023a,023b	5.1	3.5	3.5	4.6	3.0	—	4.3	2.9	—	3.9	2.6	—

Tab.2 Material Group

Type of material	Rolled material		Forged material		Forged material		Symbol of material group
	Standard No.	Standard material	Standard No.	Standard material	Standard No.	Standard material	
Carbon steel	JIS G 3101 JIS G 4051	SS400 S20C	JIS G 3201 JIS G 3202	SF390A SFVC 1	JIS G 5101 JIS G 5151	SC410 SCPH1	001
	JIS G 4051	S25C	JIS G 3201	SF440A	JIS G 5101	SC480	002
	—	—	JIS G 3202	SFVC 2A	JIS G 5151	SCPH2	003a
Low-alloy steel	—	—	JIS G 3203	SFVA F1	JIS G 5151	SCPH11	013a
	—	—	JIS G 3203	SFVA F11A	JIS G 5151	SCPH21	015a
Stainless steel	JIS G 4304 JIS G 4305	SUS304 SUS304	JIS G 3214	SUS F304	JIS G 5121	SCS13A	021a
	—	—	—	—	JIS G 5121	SCS19A	021b
	JIS G 4304 JIS G 4305	SUS316 SUS316	JIS G 3214	SUS F316	JIS G 5121	SCS14A	022a
	—	—	—	—	JIS G 5121	SCS16A	022b
	JIS G 4304 JIS G 4305	SUS304L SUS304L	JIS G 3214	SUS F304L			023a
	JIS G 4304 JIS G 4305	SUS316L SUS316L	JIS G 3214	SUS F316L			023b

Note: 1.SS400 (JIS G 3101) and SF390A and SF440A (JIS G 3201) are for materials with carbon content less than 0.33%.
2.S20C and S25C (JIS G 4051) should be tested according to JIS G 0303. The tensile strength of S20C should be larger than 400N/mm^2, and for S25C, the tensile strength should be larger than 440N/mm^2.

Pressure Rating of Cast Iron Flange for Piping (JIS B2239-2004)

This standard provides specifications on cast iron flanges for cast iron pipes, fitting, valves etc. for steam, air, gas, water, oil and other fluids.

See Tab.1 "Pressure-Temperature Standard" and Tab. 2 "Symbols of Material Group" for the relationship between temperature and maximum working pressure of fluids.

Tab.1 Pressure-Temperature Standard

Nominal pressure	Symbol of material group	Max. working pressure			
		Temperature of fluid (℃)			
		−10~120	220	300	350
5K	G2,G3	0.7	0.5	—	—
	D1,M1,M2	0.7	0.6	0.5	—
10K	G2,G3	1.4	1.0	—	—
	D1,M1,M2	1.4	1.2	1.0	—
10K thin type	G2,D1,M1,M2	0.7	—	—	—
16K	G2,G3	2.2	1.6	—	—
	D1,M1,M2	2.2	2.0	1.8	1.6
20K	G3,M1	2.8	2.0	—	—
	D1,M2	2.8	2.5	2.3	2.0

Note:1. Use proportional interpolation method to determine maximum working pressure for applications with temperature between the temperatures shown in the table.

Tab.2 Material Group

Material		Mechanical property			Material spec.	
Type	Symbol of material group	Min. tensile strength	Min. Extension	0.2% min. Durability	Standard No.	Material symbol
Grey Cast iron	G1 (2)	(145)	—	—	—	—
	G2	200	—	—	JIS G 5501	FC200
		214	—	—	—	—
	G3	250	—	—	JIS G 5501	FC250
Ductile cast iron	D1	415	18	276	JIS G 8270	FCD-S (1)
		350	22	220	JIS G 5502	FCD350
		400	15	250	JIS G 5502	FCD400
		450	10	280	JIS G 5502	FCD450
	D2(2)	(400)	(5)	(300)	—	—
		(600)	(3)	(370)	—	—
Forged steel	M1	270	5	165	JIS G 5705	FCBM27-05
		300	6	190	—	—
	M2	340	10	220	—	—
		350	10	200	JIS G 5705	FCMB35-10 FCMB35-10S(1)

Note: 1.Generally, it is not necessary to consider the impact of material, except that applicable laws or regulations require.
2.The symbols (G1 and D2) of material group are for reference purpose. They represent the structure of material group. The numbers in squares, which show the mechanical properties of materials, come from relevant standards.

Basic Dimensions of Pipe Flanges

Basic Dimensions of Pipe Flanges

Extracted from JIS B2220-2004 (Steel Pipe Flange)
JIS B2239-2004 (Cast Iron Pipe Flange)

■ BASIC DIMENSIONS OF FLANGE WITH NOMINAL PRESSURE 5K

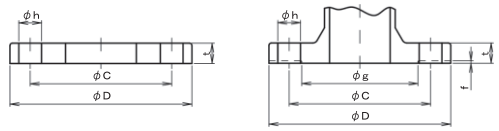

(mm)

Size	Outside dia. of steel pipe applicable to	Connection dimensions					Plane seat		Thickness of flange t	
		Outside dia. of flange D	Bolt hole				Diameter g	Height f	Other than grey cast iron/ steel	Grey cast iron
			dia. of pitch circle C	Diameter h	Number	Nominal size of screw				
10	17.3	75	55	12	4	M10	39	1	9	12
15	21.7	80	60	12	4	M10	44	1	9	12
20	27.2	85	65	12	4	M10	49	1	10	14
25	34.0	95	75	12	4	M10	59	1	10	14
32	42.7	115	90	15	4	M12	70	2	12	16
40	48.6	120	95	15	4	M12	75	2	12	16
50	60.5	130	105	15	4	M12	85	2	14	16
65	76.3	155	130	15	4	M12	110	2	14	18
80	89.1	180	145	19	4	M16	121	2	14	18
(90)	101.6	190	155	19	4	M16	131	2	14	—
100	114.3	200	165	19	8	M16	141	2	16	20
125	139.8	235	200	19	8	M16	176	2	16	20
150	165.2	265	230	19	8	M16	206	2	18	22
(175)	190.7	300	260	23	8	M20	232	2	18	—
200	216.3	320	280	23	8	M20	252	2	20	24
(225)	241.8	345	305	23	12	M20	277	2	20	—
250	267.4	385	345	23	12	M20	317	2	22	26
300	318.5	430	390	23	12	M20	360	3	22	28
350	355.6	480	435	25	12	M22	403	3	24	30
400	406.4	540	495	25	16	M22	463	3	24	30

■ BASIC DIMENSIONS OF FLANGE WITH NOMINAL PRESSURE 10K

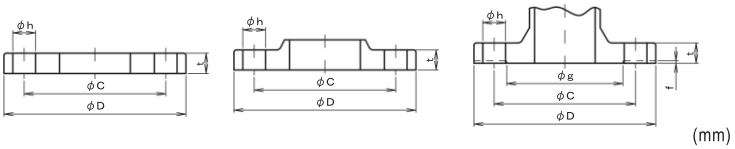

(mm)

Size	Outside dia. of steel pipe applicable to	Connection dimensions						Plane seat		Thickness of flange t			
		Outside dia. of flange D	Bolt hole					Diameter g	Height f	Other than grey cast iron/steel		Grey cast iron	
			dia. of pitch circle C	Diameter h		Number	Nominal size of screw			Parallel type	Thin type	Parallel type	Thin type
				Parallel type	Thin type		Parallel type	Thin type					
10	17.3	90	65	15	12	4	M12	M10	46	1	12	9	14	12
15	21.7	95	70	15	12	4	M12	M10	51	1	12	9	16	12
20	27.2	100	75	15	12	4	M12	M10	56	1	14	10	18	14
25	34.0	125	90	19	15	4	M16	M12	67	1	14	12	18	16
32	42.7	135	100	19	15	4	M16	M12	76	2	16	12	20	18
40	48.6	140	105	19	15	4	M16	M12	81	2	16	12	20	18
50	60.5	155	120	19	15	4	M16	M12	96	2	16	14	20	18
65	76.3	175	140	19	15	4	M16	M12	116	2	18	14	22	18
80	89.1	185	150	19	15	8	M16	M12	126	2	18	14	22	18
(90)	101.6	195	160	19	15	8	M16	M12	136	2	18	14	—	—
100	114.3	210	175	19	15	8	M16	M12	151	2	18	16	24	20
125	139.8	250	210	23	19	8	M20	M16	182	2	20	18	24	22
150	165.2	280	240	23	19	8	M20	M16	212	2	22	18	26	22
(175)	190.7	305	265	23	19	12	M20	M16	237	2	22	20	—	—
200	216.3	330	290	23	19	12	M20	M16	262	2	22	20	26	24
(225)	241.8	350	310	23	19	12	M20	M16	282	2	22	20	—	—
250	267.4	400	355	25	23	12	M22	M20	324	2	24	22	30	26
300	318.5	445	400	25	23	16	M22	M20	368	3	24	22	32	28
350	355.6	490	445	25	23	16	M22	M20	413	3	26	24	34	28
400	406.4	560	510	27	25	16	M24	M22	475	3	28	24	36	30

■ BASIC DIMENSIONS OF FLANGE WITH NOMINAL PRESSURE 16K

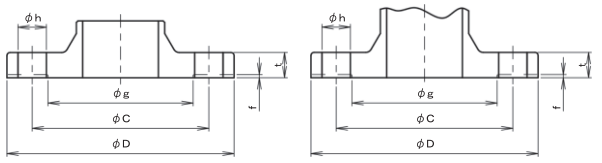

(mm)

Size	Outside dia. of steel pipe applicable to	Connection dimensions					Plane seat		Thickness of flange t	
		Outside dia. of flange D	Bolt hole				Diameter g	Height f	Other than grey cast iron/ steel	Grey cast iron
			dia. of pitch circle C	Diameter h	Number	Nominal size of screw				
10	17.3	90	65	15	4	M12	46	1	12	14
15	21.7	95	70	15	4	M12	51	1	12	16
20	27.2	100	75	15	4	M12	56	1	14	18
25	34.0	125	90	19	4	M16	67	1	14	18
32	42.7	135	100	19	4	M16	76	2	16	20
40	48.6	140	105	19	4	M16	81	2	16	20
50	60.5	155	120	19	8	M16	96	2	16	20
65	76.3	175	140	19	8	M16	116	2	18	22
80	89.1	200	160	23	8	M20	132	2	20	24
(90)	101.6	210	170	23	8	M20	145	2	20	—
100	114.3	225	185	23	8	M20	160	2	22	26
125	139.8	270	225	25	8	M22	195	2	22	26
150	165.2	305	260	25	12	M22	230	2	24	28
200	216.3	350	305	25	12	M22	275	2	26	30
250	267.4	430	380	27	12	M24	345	2	28	34
300	318.5	480	430	27	16	M24	395	3	30	36
350	355.6	540	480	33	16	M30	440	3	34	38
400	406.4	605	540	33	16	M30	495	3	38	42

(1) The "t" dimension of M1 material group of cast iron pipe flange is the same as that for grey cast iron.

■ BASIC DIMENSIONS OF FLANGE WITH NOMINAL PRESSURE 20K

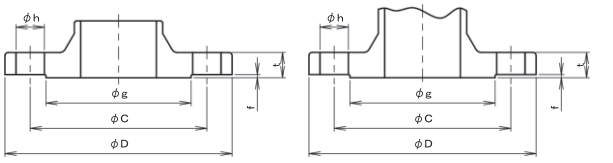

(mm)

Size	Outside dia. of steel pipe applicable to	Connection dimensions					Plane seat		Thickness of flange t	
		Outside dia. of flange D	Bolt hole				Diameter g	Height f	Other than grey cast iron/ steel	Grey cast iron
			dia. of pitch circle C	Diameter h	Number	Nominal size of screw				
10	17.3	90	65	15	4	M12	46	1	14	16
15	21.7	95	70	15	4	M12	51	1	14	16
20	27.2	100	75	15	4	M12	56	1	16	18
25	34.0	125	90	19	4	M16	67	1	16	20
32	42.7	135	100	19	4	M16	76	2	18	20
40	48.6	140	105	19	4	M16	81	2	18	22
50	60.5	155	120	19	8	M16	96	2	18	22
65	76.3	175	140	19	8	M16	116	2	20	24
80	89.1	200	160	23	8	M20	132	2	22	26
(90)	101.6	210	170	23	8	M20	145	2	24	—
100	114.3	225	185	23	8	M20	160	2	24	28
125	139.8	270	225	25	8	M22	195	2	26	30
150	165.2	305	260	25	12	M22	230	2	28	32
200	216.3	350	305	25	12	M22	275	2	30	34
250	267.4	430	380	27	12	M24	345	2	34	38
300	318.5	480	430	27	16	M24	395	3	36	40
350	355.6	540	480	33	16	M30	440	3	40	44
400	406.4	605	540	33	16	M30	495	3	46	50

(1) The "t" dimension of M1 material group of cast iron pipe flange is the same as that for grey cast iron.

Basic Dimensions of Pipe Flanges

Basic Dimensions of Pipe Flanges

Extracted from JIS B2220-2004 (Steel Pipe Flange)
JIS B8210-2009 (Spring Safety Valve for Steam and Gas)

■ BASIC DIMENSIONS OF FLANGE WITH NOMINAL PRESSURE 30K

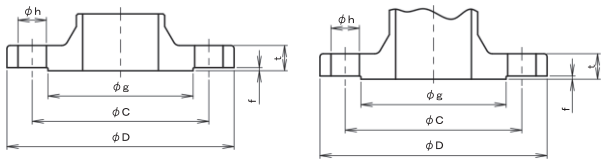

(mm)

Size	Outside dia. of steel pipe applicable to	Connection dimensions					Plane seat		Thickness of flange t
		Outside dia. of flange D	Bolt hole				Diameter g	Height f	
			dia. of pitch circle C	Diameter h	Number	Nominal size of screw			
10	17.3	110	75	19	4	M16	52	1	16
15	21.7	115	80	19	4	M16	55	1	18
20	27.2	120	85	19	4	M16	60	1	18
25	34.0	130	95	19	4	M16	70	1	20
32	42.7	140	105	19	4	M16	80	2	22
40	48.6	160	120	23	4	M20	90	2	22
50	60.5	165	130	19	8	M16	105	2	22
65	76.3	200	160	23	8	M20	130	2	26
80	89.1	210	170	23	8	M20	140	2	28
(90)	101.6	230	185	25	8	M22	150	2	30
100	114.3	240	195	25	8	M22	160	2	32
125	139.8	275	230	25	8	M22	195	2	36
150	165.2	325	275	27	12	M24	235	2	38
200	216.3	370	320	27	12	M24	280	2	42
250	267.4	450	390	33	12	M30	345	2	48
300	318.5	515	450	33	16	M30	405	3	52
350	355.6	560	495	33	16	M30	450	3	54
400	406.4	630	560	39	16	M36	510	3	60

■ BASIC DIMENSIONS OF FLANGE WITH NOMINAL PRESSURE 40K

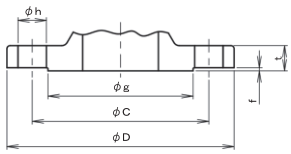

(mm)

Size	Outside dia. of steel pipe applicable to	Connection dimensions					Plane seat		Thickness of flange t
		Outside dia. of flange D	Bolt hole				Diameter g	Height f	
			dia. of pitch circle C	Diameter h	Number	Nominal size of screw			
10	17.3	110	75	19	4	M16	52	1	18
15	21.7	115	80	19	4	M16	55	1	20
20	27.2	120	85	19	4	M16	60	1	20
25	34.0	130	95	19	4	M16	70	1	22
32	42.7	140	105	19	4	M16	80	2	24
40	48.6	160	120	23	4	M20	90	2	24
50	60.5	165	130	19	8	M16	105	2	26
65	76.3	200	160	23	8	M20	130	2	30
80	89.1	210	170	23	8	M20	140	2	32
(90)	101.6	230	185	25	8	M22	150	2	34
100	114.3	250	205	25	8	M22	165	2	36
125	139.8	300	250	27	8	M24	200	2	40
150	165.2	355	295	33	12	M30	240	2	44
200	216.3	405	345	33	12	M30	290	2	50
250	267.4	475	410	33	12	M30	355	2	56
300	318.5	540	470	39	16	M36	410	3	60
350	355.6	585	515	39	16	M36	455	3	64
400	406.4	645	570	39	16	M36	515	3	70

■ DIMENSIONS OF FLANGE FOR INSTALLATION OF FULL-BORE SAFETY VALVE (JIS B8210, 2009)

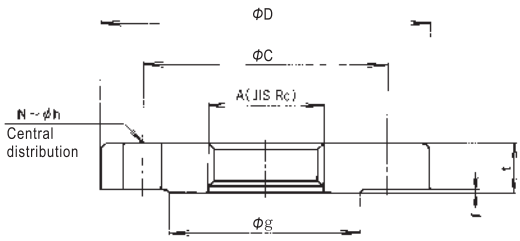

■ DIMENSION

(mm)

Nominal pressure of flange	Size	Nominal dia. of screw for installation	Flange				Bolt hole			Nominal dia. of bolt screw
		A(JIS Rc)	D	t	f	g	C	N	h	
10K	20	1	125	18	1	67	90	4	19	M16
	25	1¼	135	20	2	76	100	4	19	M16
	40	2	155	20	2	96	120	8	19	M16
	50	2½	175	22	2	116	140	8	19	M16
20K	20	1	130	20	1	70	95	4	19	M16
	25	1¼	140	22	2	80	105	4	19	M16
	40	2	165	22	2	105	130	8	19	M16
	50	2½	200	26	2	130	160	8	23	M20

Pressure Rating for Cooper Alloy Material Pipe Flanges

Pressure Rating for Cooper Alloy Material Pipe Flanges(Extracted from JIS B2240-2006)

This standard provides specifications on copper alloy flanges (hereinafter referred to as "flanges") for connecting pipes, valves, and other accessories in common piping for steam, air, gas, water and oil.

See Tab.1 "Pressure-Temperature Standard" and Tab. 2 "Symbols of Material Group" for the relationship between temperature and maximum working pressure of fluids.

Tab.1 Pressure-Temperature Standard

Nominal pressure	Symbol of material group	Max. working pressure				
		Classification	Temperature of fluid(℃)			
			T_A~120	185	205	220
10K	C11,C21	I	1.4	1.2	1.1	—
		II	1.0	1.0	1.0	—
	C12,C22	I	1.4	1.2	1.1	1.0
		II	1.0	1.0	1.0	1.0
16K	C11,C21	I	2.2	1.9	1.7	—
		II	1.6	1.6	1.6	—
	C12,C22	I	2.2	1.9	1.7	1.6
		II	1.6	1.6	1.6	1.6

Note: 1.Category I is applicable to applications using flat gasket and flat flange for connection. Category II is applicable to other applications (e.g. ring gasket).
2.T_A stands for normal temperature.
3.Use proportional interpolation method to determine maximum working pressure for applications with temperature between the temperatures shown in the table.

Tab.2 Material

Type of flange	Symbol of material group	Material standard		
		Standard No.	Material symbol	Special remark
Slip-on welded flange (SO)	C11	JIS H5120	CAC202	Pb≦1%
	C12	JIS H5120	CAC407	Sn 5~6% Pb≦1%
Integral flange (IT)	C21	JIS H5120	CAC406	—
	C22	JIS H5120	CAC402	—
			CAC407	—

■ BASIC DIMENSIONS OF COPPER ALLOY PIPE FLANGE

Nominal pressure 10K flange (mm)

Size	Flange		Bolt hole			Nominal size of bolt screw
	External dia. D	Thickness t	dia. of pitch circle	Number	Size h	
10	90	12	65	4	15	M12
15	95	12	70	4	15	M12
20	100	14	75	4	15	M12
25	125	14	90	4	19	M16
32	135	16	100	4	19	M16
40	140	16	105	4	19	M16
50	155	16	120	4	19	M16
65	175	18	140	4	19	M16
80	185	18	150	8	19	M16
100	210	18	175	8	19	M16
125	250	20	210	8	23	M20
150	280	22	240	8	23	M20

Nominal pressure 16K flange (mm)

Size	Flange		Bolt hole			Nominal size of bolt screw
	External dia. D	Thickness t	dia. of pitch circle	Number	Size h	
10	90	12	65	4	15	M12
15	95	12	70	4	15	M12
20	100	14	75	4	15	M12
25	125	14	90	4	19	M16
32	135	16	100	4	19	M16
40	140	16	105	4	19	M16
50	155	16	120	8	19	M16
65	175	18	140	8	19	M16
80	200	20	160	8	23	M20
100	225	22	185	8	23	M20
125	270	22	225	8	25	M22
150	305	24	260	12	25	M22

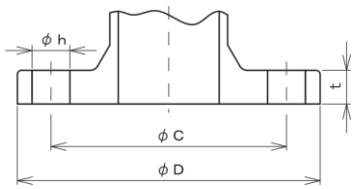

Integral flange (IT)

Cv Calculation

Cv is the flow of clear water expressed in US gal/min unit under the conditions of 60°F (15.6℃), full open of valve and differential pressure 1psi.

■ CALCULATION STEPS

Based on given specifications of fluid and nominal diameter calculated, Cv can be calculated according to the following steps.

❶ In most cases, the nominal diameter of valve can be calculated using Cv methods. In this method, the Cv values at maximum, normal, and minimum flows and differential pressure are calculated. The Cv value at the maximum flow and minimum differential pressure is the maximum Cv, while the Cv value at the minimum flow and the maximum differential pressure is the minimum Cv.

❷ Generally, the nominal diameter of valve can be determined using the flow 10~20% larger than obtained maximum Cv by calculation. However, depending on the type of regulating valve (some have specified minimum adjustable flow or rangeablity and max. controllable flow divided by min. controllable flow), it may be necessary to consider minimum Cv.

■ FORMULAS FOR CALCULATING Cv

Type		Pressure: MPa	Pressure: kPa
For steam	$\Delta P < \frac{P_1}{2}$	$Cv=\frac{WK}{139\sqrt{\Delta P(P_1+P_2)}}$	$Cv=\frac{WK}{0.139\sqrt{\Delta P(P_1+P_2)}}$
	$\Delta P \geqq \frac{P_1}{2}$	$Cv=\frac{WK}{121P_1}$	$Cv=\frac{WK}{0.121P_1}$
	Unit	P_1=primary pressure MPa·A P_2=secondary pressure MPa·A	P_1=primary pressure kPa·A P_2=secondary pressure kPa·A
		W:max. Flow kg/h $\Delta P=P_1-P_2$ K=1+(0.0013×superheating degree℃)	
For air	$\Delta P < \frac{P_1}{2}$	$Cv=\frac{Q}{2920}\sqrt{\frac{G(273+t)}{\Delta P(P_1+P_2)}}$	$Cv=\frac{Q}{2.92}\sqrt{\frac{G(273+t)}{\Delta P(P_1+P_2)}}$
	$\Delta P \geqq \frac{P_1}{2}$	$Cv=\frac{Q\sqrt{G(273+t)}}{2530P_1}$	$Cv=\frac{Q\sqrt{G(273+t)}}{2.53P_1}$
	Unit	P_1=primary pressure MPa·A P_2=secondary pressure MPa·A $\Delta P=P_1-P_2$ MPa	P_1=primary pressure kPa·A P_2=secondary pressure kPa·A $\Delta P=P_1-P_2$ kPa
		Q=max. flow (m^3/h) (standard state) (15℃, 0.1013MPa·A), G: specific gravity (air=1), t: temperature (℃)	
For Liquids	Formula	$Cv=\frac{0.365V\sqrt{G}}{\sqrt{P_1-P_2}}$	$Cv=\frac{11.5V\sqrt{G}}{\sqrt{P_1-P_2}}$
	Unit	P_1=primary pressure MPa·A P_2=secondary pressure MPa·A	P_1=primary pressure kPa·A P_2=secondary pressure kPa·A
		V: max. flow (m^3/h), G: specific gravity (water:1)	
	■ Viscosity correction: For fluid with viscosity larger than 20cSt, use viscosity index (Iv) and viscosity correction coefficient (K) from the viscosity correction coefficient chart to calculate correction flow V'		
	Correction formula	$Iv=\frac{72780}{Mc}\left(\frac{\Delta P}{G}\right)^{\frac{1}{4}}V^{\frac{1}{2}}$	$Iv=\frac{12940}{Mc}\left(\frac{\Delta P}{G}\right)^{\frac{1}{4}}V^{\frac{1}{2}}$
	Unit	ΔP: differential pressure MPa	ΔP: differential pressure kPa
		V: max. flow (before viscosity correction, m^3/h), Mc: viscosity (cSt, see Note), G: specific gravity (water:1)	

Cv correction index chart

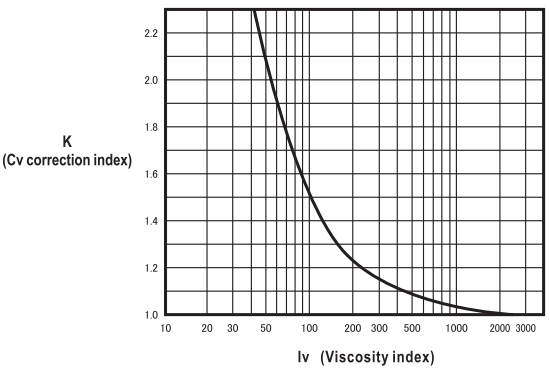

Correction flow v', m^3/h (the max. flow after viscosity correction) can be calculated using the following formula:

$$V'=\frac{V}{K}$$

To calculate Cv after viscosity correction, replace the max. flow V (m^3/h) in the following formula with correction flow V' (m^3/h).

$$V'=V\times K$$

Note: See Page 280 for conversion from SI unit.

■ FLOW PER Cv (saturated steam)

(kg/h)

P_2 \ P_1	0.10	0.15	0.20	0.25	0.30	0.35	0.40	0.45	0.50	0.55	0.60	0.65	0.70	0.75	0.80	0.85	0.90	0.95	1.0	1.1	1.2	1.3	1.4	1.5	1.6	1.8	2.0	2.2	2.4	2.6	2.8	3.0
0.035	20.59	29.34	36.45	↑	↑	↑	↑	↑	↑	↑	↑	↑	↑	↑	↑	↑	↑	↑	↑	↑	↑	↑	↑	↑	↑	↑	↑	↑	↑	↑	↑	↑
0.05	18.45	27.89	36.21	42.50	48.55																											
0.10		20.91	31.16	40.01	48.25	54.60	60.65																									
0.15			23.10	34.12	43.48	52.10	60.29	66.70	72.75																							
0.20				25.10	36.84	46.70	55.69	64.17	72.33	78.80	84.85																					
0.25					26.96	39.37	49.70	59.05	67.83	76.23	84.36	90.90	96.95																			
0.30						28.69	41.76	52.54	62.24	71.30	79.94	88.28	96.40	103.0	109.0																	
0.35							30.33	44.01	55.23	66.27	74.61	83.49	92.03	100.3	108.4	115.1	121.1															
0.40								31.88	46.15	57.79	68.16	77.78	86.89	95.63	104.1	112.3	120.4	127.2	133.2													
0.45									33.36	48.20	60.25	70.94	80.82	90.16	99.11	107.7	116.1	124.4	132.5	145.3												
0.50										34.78	50.16	62.61	73.62	83.76	93.32	102.4	111.2	119.8	128.2	144.5	157.4											
0.55											36.14	52.05	64.88	76.19	86.59	96.38	105.7	114.7	123.4	140.3	156.5	169.5										
0.60												37.46	53.88	67.07	78.69	89.34	99.34	108.8	118.0	135.5	152.3	168.6	181.6									
0.65													38.72	55.64	69.20	81.11	92.00	102.2	111.9	130.2	147.6	164.4	180.6	193.7								
0.70			P_2 \ P_1		0.04		0.06		0.08					39.95	57.35	71.26	83.46	94.59	105.0	124.4	142.5	159.7	176.4	192.7	205.8								
0.75															41.14	59.01	73.27	85.74	97.11	117.8	136.8	154.7	171.8	188.5	204.7							
0.80			0.02		10.07		14.77		18.72							42.30	60.63	75.22	87.96	110.3	130.4	149.1	166.8	183.9	200.5	230.0						
0.85			0.04		—		10.81		15.78								43.43	62.20	77.12	101.9	123.4	143.0	161.4	179.0	196.0	228.8						
0.90																		44.52	63.73	92.25	115.5	136.2	155.4	173.6	191.1	224.6	254.2					
0.95																			45.60	80.79	106.6	128.7	148.9	167.8	185.9	220.2	252.8					
1.0																				66.69	96.35	120.4	141.8	161.5	180.2	215.4	248.7	278.4				
1.1																					69.53	100.2	125.1	147.1	167.4	204.8	239.6	272.8	302.6			
1.2																						72.26	104.0	129.7	152.3	192.6	229.3	263.8	296.9	326.8	351.0	375.2

* P_1 =Primary pressure (MPa)
P_2 =Secondary pressure (MPa)

■ Cv VALUE TABLE

Type \ Model \ Size		10 (⅜″)	15 (½″)	20 (¾″)	25 (1″)	32 (1¼″)	40 (1½″)	50 (2″)	65 (2½″)	80 (3″)	100 (4″)	125 (5″)	150 (6″)	200 (8″)	250 (10″)
Pressure reducing valve	RD-3H/3HA		0.8	0.8	1										
Temperature regulating valve	TD-8		3	3	4	6.5	8								
	TD-2/2L		3	3	4	6.5	8	12.5	18	25	40	70	110		
	TD-4/4L		1.5	1.5	3	4	4								

Size selection method

1. $(Cv)=\frac{(\text{Max. flow specified})}{\text{flow/Cv}}$ (Possible flow)=(flow/Cv)×(Cv)

2. Correction using superheated steam

(Unit flow for correction)= $\frac{\text{flow/Cv}}{K}$ K=1+(0.0013×(overheating degree,))

Type \ Model \ Size		10 (⅜″)	15 (½″)	20 (¾″)	25 (1″)	32 (1¼″)	40 (1½″)	50 (2″)	65 (2½″)	80 (3″)	100 (4″)	125 (5″)	150 (6″)	200 (8″)	250 (10″)
Motor valve	BM-9S/9SR		6	10	18										
	ML-FD					20	30	50	75	105	170	250	360		
	ML-TS/FS		3.6	6.4	10	16	25	40	67	102	160				
	ML-TT/FT		3.6	6.4	10	16	25	40	67	102	160				
Cylinder valve	COS/COS-1H	3	4.5	7.5	11	17	23	35	50						
	COF/CCF-1H		4.5	7.5	11	17	23	35	50	70					
	CP-FS		3.6	6.4	10	16	25	40	67	102	160				
	CP-FT		3.6	6.4	10	16	25	40	67	102	160				

Note: 1.The flow/Cv is the flow per Cv under relevant pressure condition.
2.Depending on model, the range of pressure and offset vary.
3.For models not mentioned in the Cv table, see relevant Size Selection Chart and Flow Chart.

■ FLOW PER Cv (Air)

(m^3/h(standard state))

P_2 \ P_1	0.01	0.02	0.04	0.06	0.08	0.10	0.15	0.20	0.25	0.30	0.35	0.40	0.45	0.50	0.55	0.60	0.70	0.80	0.90	1.0	1.2	1.4	1.6	1.8	2.0	2.2	2.4	2.6	2.8	3.0	3.5	4.0	4.5	5.0
0(atm.)	7.865	11.38	16.80	21.41	25.64	29.67																												
0.001	7.479	11.11	16.62	21.27	25.53	29.57																												
0.005	5.629	9.967	15.88	20.69	25.05	29.16																												
0.010		8.227	14.84	19.91	24.41	28.61																												
0.020			12.36	18.13	22.98	27.40	37.14																											
0.035			8.358	14.71	20.39	25.27	36.01	44.53																										
0.05				12.24	17.04	22.65	34.22	44.44	51.92	59.31																								
0.10							25.66	38.24	49.11	59.22	66.70	74.09																						
0.15								28.35	41.87	53.37	63.94	73.99	81.48	88.87																				
0.20									30.81	45.21	57.31	68.34	78.75	88.76	96.26	103.6																
0.25										33.09	48.32	61.00	72.47	83.24	93.55	103.5	118.4															
0.30											35.22	51.25	64.48	76.38	87.50	98.11	118.3	133.2	147.9														
0.40													39.13	56.64	70.93	83.66	106.6	127.7	147.8	162.7													
0.50															42.69	61.56	90.35	114.5	136.5	157.3	192.3												
0.60																	66.12	96.57	121.9	144.8	186.9	221.8											
0.70																		70.38	102.4	128.8	174.9	216.5	251.4										
0.80																			74.40	107.9	160.1	204.8	246.1	281.0									
0.90																				78.22	141.7	190.8	234.6	275.7	310.5								
1.0																					118.2	174.0	221.2	264.3	305.2	340.1	369.7						
1.2																					127.7		186.9	236.4	281.4	323.7	364.4	399.2	428.8				
1.4																							136.5	199.0	250.8	297.5	341.2	383.0	423.5	458.3				
1.6																								144.8	210.3	264.3	312.7	357.9	400.9	442.3	532.2	606.1		
2.0																										160.0	231.4	289.5	341.2	389.0	498.9	600.8	680.0	753.9
2.5																												124.2	219.1	288.0	424.8	540.8	647.4	748.5
3.0																															312.2	457.8	579.8	690.9

* P_1=Primary pressure (MPa) P_2=Secondary pressure (MPa)

■ Cv VALUE TABLE

Product \ Model \ Size	10 (⅜″)	15 (½″)	20 (¾″)	25 (1″)	32 (1¼″)	40 (1½″)	50 (2″)	65 (2½″)	80 (3″)	100 (4″)	125 (5″)	150 (6″)	200 (8″)	250 (10″)
Reducing/ Primary pressure regulating valve — RD-3HA/3HAF		0.8	0.8	1										
RD-4/4B		0.4	0.4	0.4										
RD-8		1	2.5	4	6.3	8								
RD-14		1	2	3.5	5.5	8	14	22	32	48	75	108		
MD-14		1	2	3.5	5.5	8	14	22	32	48	75	108		

Size selection method

1. $(Cv)=\frac{\text{(Max. flow specified)}}{\text{flow/Cv}}$ (Possible flow)=(flow/Cv)×(Cv)

2. Correction for gases

(Unit flow for correction)=(Flow/Cv)×$\sqrt{\frac{29}{M}}$ M: molecular weight

Product \ Model \ Size	10 (⅜″)	15 (½″)	20 (¾″)	25 (1″)	32 (1¼″)	40 (1½″)	50 (2″)	65 (2½″)	80 (3″)	100 (4″)	125 (5″)	150 (6″)	200 (8″)	250 (10″)
Motor valve — BM-12S/13S/14S	4.5	7	10	20	25	45	63							
BM-12SR/13SR/14SR	4.5	7	10	20										
BM-12CR/13CR/14CR	4.5	7	10	20										
BM-7S	4.5	10	18	27	45	70	100							
BM-1S	2.5	3.5	7	11	20	25	45							
3BM-1S		2.8	7.5	12	18.5	30	45							
ML-FD					20	30	50	75	105	170	250	360		
ML-TS/FS		3.6	6.4	10	16	25	40	67	102	160				
ML-TT/FT				10	16	25	40	67	102	160				
Cylinder valve — COS/CCS-1	3	4.5	7.5	11	17	23	35	50						
COF/CCF-1		4.5	7.5	11	17	23	35	50	70					
CP-FS		3.6	6.4	10	16	25	40	67	102	160				
CP-FT		3.6	6.4	10	16	25	40	67	102	160				

Note: 1.The flow/Cv is the flow per Cv under relevant pressure condition.
2.Depending on model, the range of pressure and offset vary.
3.For models not mentioned in the Cv table, see relevant Size Selection Chart and Flow Chart.

■ FLOW PER Cv (Water)

Differential pressure ΔP (MPa)	0.001	0.002	0.003	0.004	0.005	0.006	0.008	0.01	0.02	0.03	0.04	0.05	0.07	0.10
Flow per Cv (m^3/h)	0.0866	0.1225	0.1500	0.1732	0.1937	0.2122	0.2450	0.2739	0.3874	0.4745	0.5479	0.6126	0.7248	0.8663

Differential pressure ΔP (MPa)	0.20	0.25	0.30	0.35	0.40	0.45	0.50	0.55	0.60	0.70	0.80	0.90	1.0	1.1
Flow per Cv (m^3/h)	1.225	1.369	1.500	1.620	1.732	1.837	1.937	2.031	2.122	2.292	2.450	2.599	2.739	2.873

Differential pressure ΔP (MPa)	1.2	1.3	1.4	1.5	1.6	1.8	2.0	2.2	2.3	2.4	2.6	2.8	3.0
Flow per Cv (m^3/h)	3.001	3.123	3.241	3.355	3.465	3.675	3.874	4.063	4.155	4.244	4.417	4.584	4.745

■ Cv VALUE TABLE

Product	Model \ Size	10 (⅜″)	15 (½″)	20 (¾″)	25 (1″)	32 (1¼″)	40 (1½″)	50 (2″)	65 (2½″)	80 (3″)	100 (4″)	125 (5″)	150 (6″)	200 (8″)	250 (10″)	300 (12″)	400 (16″)
Pressure reducing valve	RD-14		1	2	3.5	5.5	8	14	22	32	48	75	108				
	RD-11			3.4	6	9.4	13.5	24	37.5	54	72	112.5	144				
	RD-17			2	3	5	6	10	15	18	32	50	72				
	RD-17A			1	1.5	2.5	3	5	7.5	9	16	25	36				
	RD-3HA/3HAF		0.8	0.8	1												
	RD-5R			2	3	5	6	15	23	30	40	50	60				
	RD-19/19F		0.8	0.8	0.8												
Primary pressure regulating valve	MD-14		1	2	3.5	5.5	8	14	22	32	48	75	108				
	MD-11			3.4	6	9.4	13.5	24	37.5	54	72	112.5	144				
	MD-2P			2	3	5	6	15	23	30	40	50	60				
	MD-1A		3	3	3	10	10	10									

Product	Model \ Size	10 (⅜″)	15 (½″)	20 (¾″)	25 (1″)	32 (1¼″)	40 (1½″)	50 (2″)	65 (2½″)	80 (3″)	100 (4″)	125 (5″)	150 (6″)	200 (8″)	250 (10″)	300 (12″)
Motor valve	BM-12S series		7	10	20	25	45	63								
	BM-12SR series		7	10	20											
	BM-12CR series		7	10	20											
	BM-7S	4.5	10	18	27	45	70	110								
	BM-1S	2.5	3.5	7	11	20	25	45								
	3BM-1S		2.8	7.5	12	18.5	30	45								
	TBM-8S	3.5	7	11	20	25	45	63								
	ML-FD					20	30	50	75	105	170	250	360			
	ML-FW					16	25	40	67	102	160	250	360			
	ML-TS/FS		3.6	6.4	10	16	25	40	67	102	160					
	ML-TT/FT		3.6	6.4	10	16	25	40	67	102	160					
Cylinder valve	COS/CCS-1/1H	3	4.5	7.5	11	17	23	35	50							
	COF/CCF-1/1H		4.5	7.5	11	17	23	35	50	70						
	CP-FS		3.6	6.4	10	16	25	40	67	102	160					
	CP-FT		3.6	6.4	10	16	25	40	67	102	160					

Size selection method

1. $(Cv)=\frac{\text{(Max. flow specified)}}{\text{flow/Cv}}$ (Possible flow)=(flow/Cv)×(Cv)

2. Correction using specific gravity (G)
(flow for correction per Cv)=(flow/Cv)×$\sqrt{\frac{1}{G}}$

Note: 1.Depending on model, the range of pressure and offset vary.
2.For models not mentioned in the Cv table, see relevant Size Selection Chart and Flow Chart.

Velocity in Pipes (for Water and Air)

■ WATER/AIR VELOCITY CHART

Calculation formula $Q=\frac{\pi}{4}A^2\times V\times 3600\times 10^{-6}$ $Q=m^3/h$
A=mm (dia. of pipe)
V=m/s

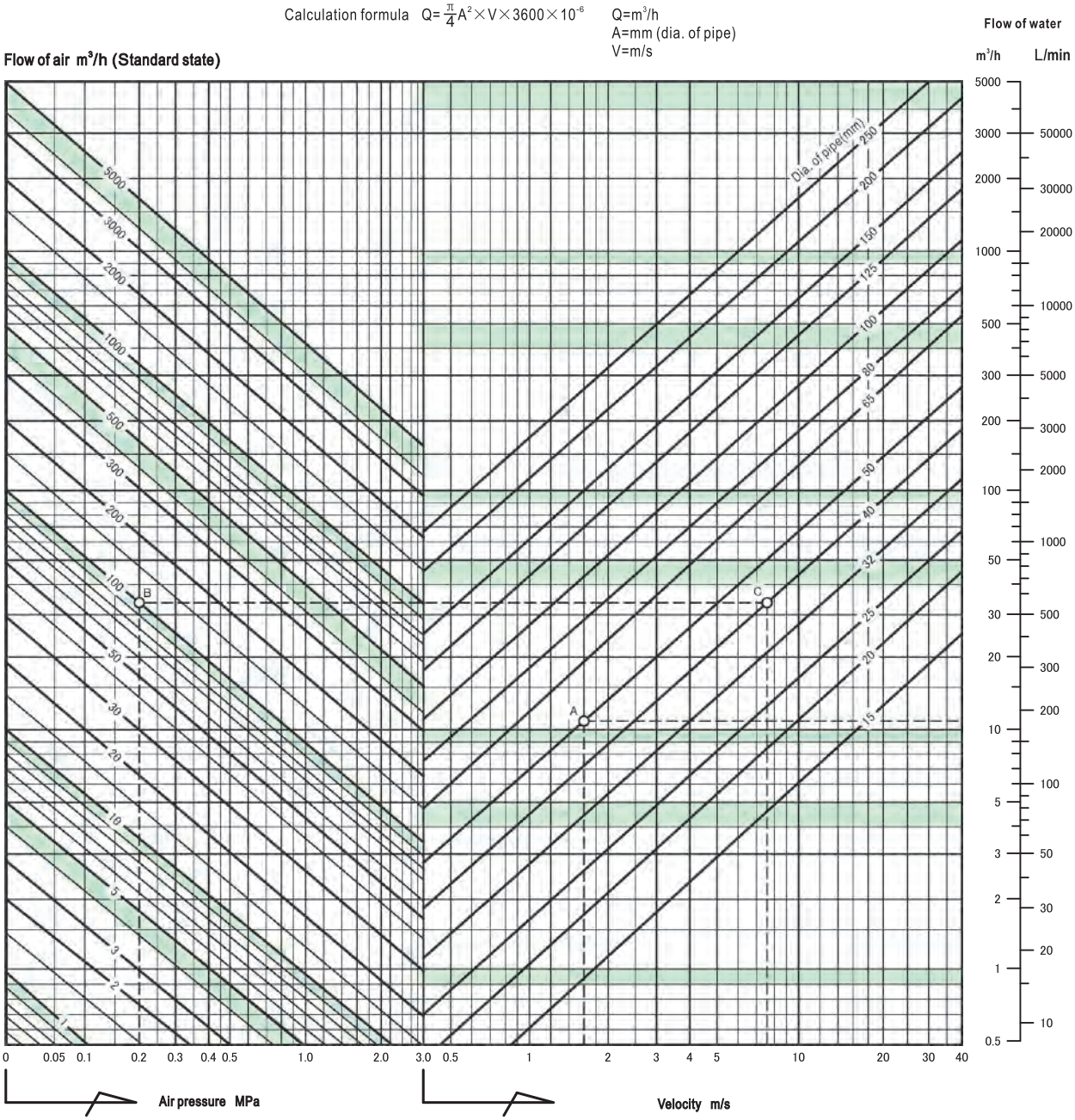

● HOW TO USE THE CHART

Example 1: Calculate velocity under the following conditions:
Flow of water: 11m³/h
Pipe diameter: 50mm
Trace horizontally along the 11m³/h flow line until it intersects with the line representing 50mm pipe size. The intersection point is named A.
Draw a vertical line from point A to read the velocity, which is 1.6m/s.

Example 2: Calculate velocity under the following conditions:
Flow of air: 100m³/h (standard state)
Pressure: 0.2MPa
Pipe diameter: 40mm
Find the intersection point (B) of 100m³/h flow line and 0.2MPa pressure line.
Trace horizontally from point B until it intersects with 40mm pipe size line. The intersection point is named C. Draw a vertical line from point C and read the velocity, which is 7.5m/s.

● STANDARD VELOCITY

❶ Volute pump	
Suction pipe	2.0~2.5m/s
Low pressure discharge pipe	2.5~3.0 m/s
High pressure discharge pipe	3.0~3.5 m/s
❷ Inside liquid transport pipe	
Water etc. with pressure 0.1~1.0MPa	1.5~3 m/s
Water etc. with pressure 20~30MPa	3~4 m/s
Others such as oil, fluid with high viscosity	0.5~2 m/s
❸ Compressor	
Suction pipe	10~20m/s
Low pressure discharge pipe	20~30 m/s
High pressure discharge pipe	10~15 m/s
❹ Inside compressed gas transport pipe	
0.1~0.2 MPa	8~15 m/s
20~30MPa	5~7 m/s

Velocity in Pipes (Steam)

WATER/AIR VELOCITY CHART

Calculation formula $Q=\frac{\pi}{4}D^2\times V\times\rho\times 3600\times 10^{-6}$ Q=m³/h
D=mm (SGP Internal diameter)
V=m/s
ρ=kg/m³(Density)

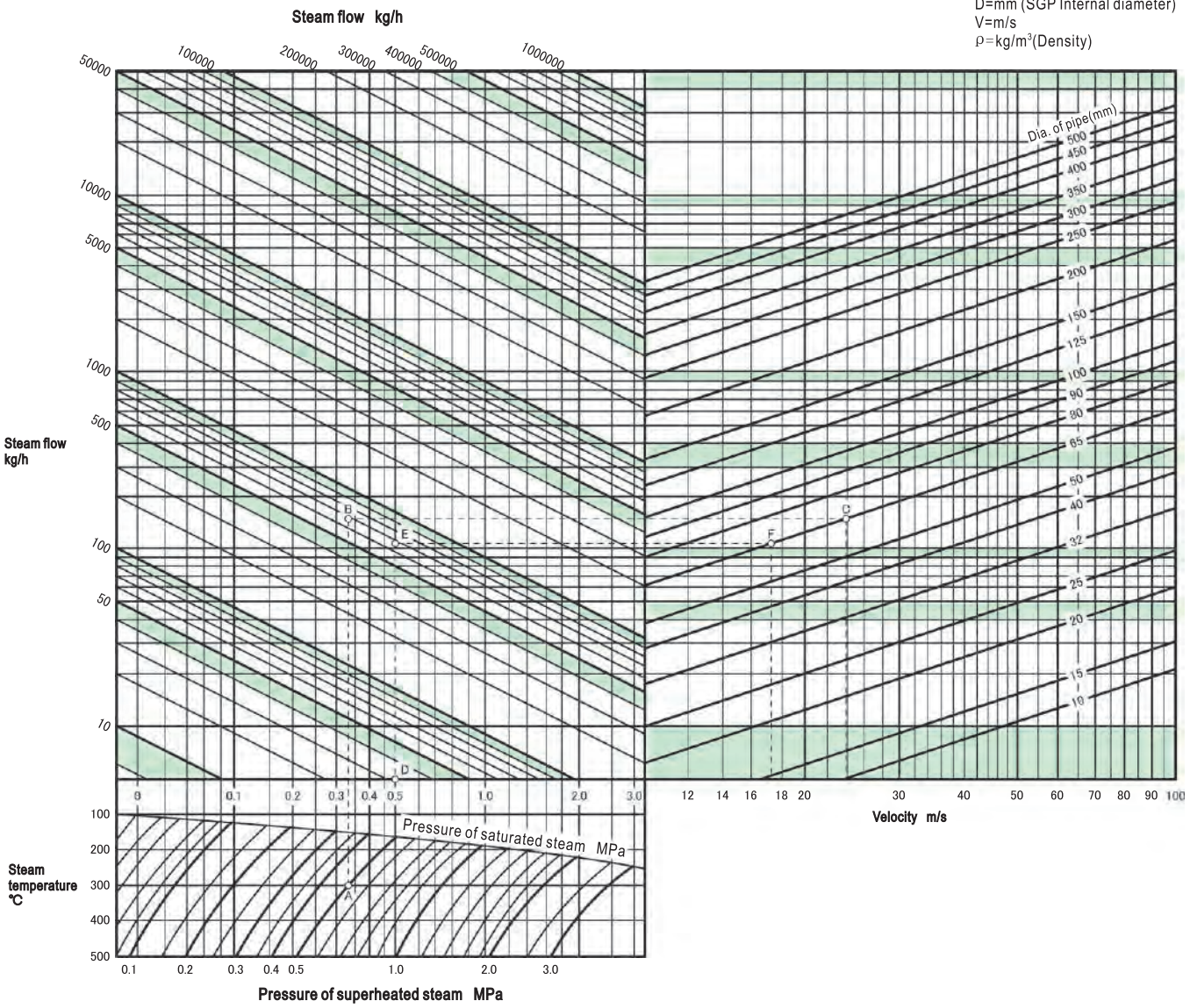

HOW TO USE THE CHART

Example: Calculate velocity under the following conditions:
Steam pressure: 0.5MPa
Temperature of superheated steam: 300℃
Flow: 700kg/h
Pipe diameter: 65mm

Determine the intersection point (A) of 0.5MPa pressure line and the 300℃ temperature line. Draw a vertical line from point A until it intersects with 700kg/h flow line. The intersection point is named B. Draw a horizontal line from point B until it intersects with the 65mm pipe diameter line. The intersection point is named C. Move from point C vertically to read the velocity, which is 23.7 m/s.

For saturated steam under the same conditions, determine the intersection point (D) on saturated steam line and points E and F, then read the velocity, which is 17.3 m/s.

STANDARD VELOCITY

❶ Steam engine

Saturated steam	20~30m/s
Superheated steam	30~45m/s

❷ Inside steam transport pipe

Saturated steam with pressure 0.2~0.5MPa	15~20m/s
Saturated steam with pressure 0.5~1.5MPa	20~30m/s

Water Head Loss of Pipeline

EQUIVALENT PIPE LENGTH OF JOINT AND VALVE ETC.

Equivalent length of pressure loss of steel pipe with hard PVC lining for water supply(source: Handbook for Air-conditioning and Hygiene Engineering)

Size	Corresponding pipe length (m)							
	90°Elbow	45°Elbow	90°T (Separate flow)	90°T (Straight flow)	Sluice valve	Glove valve	Angle valve Foot valve	Check valve (Swing type)
15(½″)	3.0*1	2.3*1	3.8*1	1.2*1	3.5*2	4.5	2.4	5.5*2
20(¾″)	3.1*1	2.2*1	3.8*1	1.6*1	2.3*2	6.0	3.6	2.7*2
25(1″)	3.2*1	1.8*1	3.3*1	1.2*1	1.7*2	7.5	4.5	2.9*2
32(1¼″)	3.6*1	2.3*1	4.0*1	1.4*1	1.3*2	10.5	5.4	3.2*2
40(1½″)	3.3*1	1.9*1	3.6*1	0.9*1	1.7*2	13.5	6.6	2.6*2
50(2″)	3.3*1	1.9*1	3.5*1	0.9*1	1.9*2	16.5	8.4	3.7*2
65(2½″)	4.4*1	2.4*1	4.4*1	1.1*1	0.48	19.5	10.2	4.6
80(3″)	4.6*1	2.4*1	4.9*1	1.3*1	0.63	24.0	12.0	5.7
100(4″)	4.7*1, 4.2	2.7*1, 2.4	6.6*1, 6.3	1.5*1, 1.2	0.81	37.5	16.5	7.6
125(5″)	5.1	3.0	7.5	1.5	0.99	42.0	21.0	10.0
150(6″)	6.0	3.6	9.0	1.8	1.20	49.5	24.0	12.0
200(8″)	6.5	3.7	14.0	4.0	1.40	70.0	33.0	15.0
250(10″)	8.0	4.2	20.0	5.0	1.70	90.0	43.0	19.0

Note: 1. Pipe end corrosion proof type. Data from materials published by Steel Joint Association. Also used as poly powder lining steel pipe.
2. Pipe end corrosion proof type. Data from materials published by makers. Also used as poly powder lining steel pipe.
Data without asterisk mark is for steel pipe.

FRICTION LOSS OF PIPING

Calculation formula (Hazen-Williams formula) $Q=4.87cd^{2.63}R^{0.54}\times10^{3}$ $\{Q=1.67cd^{2.63}i^{0.54}\times10^{4}\}$

Q : Flow (L/min)
c : Flow coefficient (130 for new steel pipe and new cast iron pipe)
d : Internal dia. of pipe (m)
R : Friction resistance per unit length (kPa/m)
i : Dynamic water slope {mAq/m}

Flow chart for steel pipe with hard PVC lining for water supply

(Source: Handbook for Air-conditioning and Hygiene Engineering)

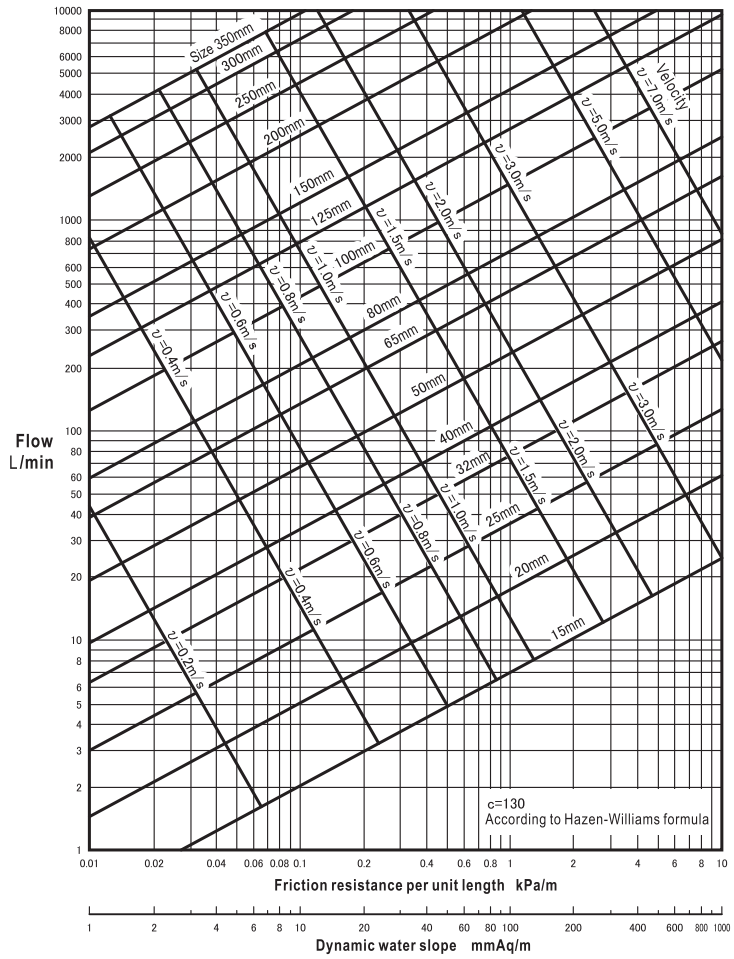

CALCULATION EXAMPLE

To calculate total water head loss and required total head of pump when pumping up water from one tank to another tank (actual head 200kPa (20m)) in size 50mm steel pipe (length 36m) with hard PVC lining and at a pumping speed of 150 L/min.

❶ Calculate equivalent pipe length of joints and valves, etc.
Foot valve (1pc.): 8.4×1=8.4
Check valve (1pc.): 3.7×1=3.7
Sluice valve (2 pcs.): 1.9×2=3.8
Elbow (4 pcs.): 3.3×4=13.2
Total: 29.1m

❷ Converted pipe length:
36+29.1=65.1m

❸ From the chart, the friction resistance at size 50mm, flow 150L/min is 0.40kPa/m
Therefore,
The total head loss is:
65.1×0.40=26.04≒26kPa (2.6m)
The required head of pump is:
200+26=226kPa (20+2.6=22.6m)

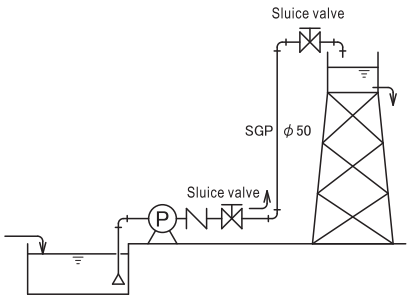

Accumulated Drain at Steam Pipeline

VOLUME OF DRAIN FORMED DURING INITIAL AERATION

Calculation formula

$$W = W_1 \times L \times \frac{60}{T}$$

$$W_1 = \frac{cM(t_1 - t_2)}{\gamma}$$

Where:
W: Volume of drain formed (kg/h)
L: Length of pipe (m)
T: Warming-up time (min)
W_1: Volume of drain formed/1m pipe (kg/m)
c: Specific heat of pipe (kJ/kg·°C)
Specific heat of steel pipe: 0.465 kJ/kg·°C
M: Mass of 1m pipe (kg)
t_1: Initial temperature of pipe (ambient temperature) (°C)
t_2: Final temperature of pipe (steam temperature) (°C)
γ: Latent heat of steam (kJ/kg)

Reference: The model and number of steam trap should be decided according to the following formula:
Discharge capacity of steam trap (kg/h) > Drain formed (kg/h) × Safety rate (≒3)

CALCULATION EXAMPLE

Calculate the volume of drain formed under the following conditions:
Size 100mm (STPG Sch40)
Steam pressure: 1.0 MPa (steam temperature 184.1°C)
Ambient temperature: 0°C
Pipe length: 10m
Warming-up time: 20 min

○ Drain formed per 1m pipe (W_1)

$$W_1 = \frac{0.465 \times 16 \times (184.1 - 0)}{1998.5} = 0.69 \text{ kg/m}$$

○ Total drain formed (W)

$$W = 0.69 \times 10 \times \frac{60}{20} = 20.7 \text{ kg/h}$$

Tab: Drain formed per 1m pipe during initial aeration (W_1) (kg/m)

Pressure (MPa) \ Size	15	20	25	32	40	50	65	80	100	125	150	200	250	300
0.05(111.4°C)	0.04	0.05	0.06	0.09	0.10	0.13	0.22	0.27	0.38	0.51	0.65	0.98	1.38	1.83
0.1(120.2°C)	0.04	0.05	0.07	0.09	0.11	0.14	0.24	0.29	0.41	0.56	0.71	1.07	1.51	1.99
0.2(133.5°C)	0.04	0.05	0.08	0.10	0.12	0.16	0.27	0.33	0.46	0.63	0.80	1.21	1.70	2.25
0.3(143.6°C)	0.05	0.06	0.09	0.11	0.13	0.18	0.29	0.36	0.51	0.68	0.87	1.32	1.86	2.46
0.4(151.8°C)	0.05	0.06	0.09	0.12	0.14	0.19	0.31	0.38	0.54	0.73	0.93	1.42	1.99	2.63
0.5(158.8°C)	0.05	0.07	0.10	0.13	0.15	0.20	0.33	0.41	0.57	0.77	0.99	1.50	2.10	2.78
0.6(165°C)	0.05	0.07	0.10	0.13	0.16	0.21	0.34	0.42	0.60	0.81	1.03	1.57	2.20	2.91
0.7(170.4°C)	0.06	0.07	0.10	0.14	0.16	0.22	0.36	0.44	0.62	0.85	1.08	1.64	2.30	3.04
0.8(175.4°C)	0.06	0.07	0.11	0.14	0.17	0.22	0.37	0.46	0.65	0.88	1.12	1.70	2.38	3.15
0.9(179.9°C)	0.06	0.08	0.11	0.15	0.18	0.23	0.38	0.47	0.67	0.91	1.16	1.75	2.46	3.26
1.0(184.1°C)	0.06	0.08	0.12	0.15	0.18	0.24	0.40	0.49	0.69	0.93	1.19	1.81	2.54	3.36
1.5(201.4°C)	0.07	0.09	0.13	0.17	0.20	0.27	0.45	0.55	0.78	1.06	1.35	2.04	2.87	3.80
2.0(214.9°C)	0.07	0.10	0.14	0.19	0.22	0.29	0.49	0.61	0.86	1.16	1.48	2.24	3.15	4.17
3.0(235.7°C)	0.09	0.11	0.16	0.22	0.26	0.34	0.56	0.70	0.99	1.34	1.71	2.59	3.64	4.81

STPG Sch 40, Ambient temperature 0°C

DRAINED FORMED IN INSULATED PIPE

Calculation formula

$$W = \frac{Q \times 3.6}{\gamma} \times L$$

$$Q = \frac{2\pi(t_2 - t_1)}{\frac{2}{d_2\alpha} + \frac{1}{\lambda} \ln \frac{d_2}{d_1}}$$

Where:
W: Volume of drain formed (kg/h)
Q: Heat dissipation of pipe surface (W/m)
L: Length of pipe (m)
γ: Latent heat of steam (kJ/kg)
t_1: Ambient temperature (°C)
t_2: Steam temperature (°C)
d_1: Outer diameter of pipe (m)
d_2: Outer diameter of insulating material (m)
α: Rate of heat transfer from surface of insulating material to atmosphere ($W/m^2 \cdot K$ ≒12)
λ: Thermal conductivity of insulating material (W/m·K)

CALCULATION EXAMPLE

Calculate the volume of drain formed under the following conditions:
Size: 100mm
Steam pressure: 1.0 MPa (steam temperature 184.1°C)
Ambient temperature: 0°C
Pipe length: 10m
Heat-insulating (glass wool): λ=0.043 W/m·K
Insulation thickness: 50mm

○ Heat dissipation of pipe surface (Q)

$$Q = \frac{2 \times 3.14 \times (184.1 - 0)}{\frac{2}{0.2143 \times 12} + \frac{1}{0.043} \times \ln \frac{0.2143}{0.1143}} = 75.1 \text{ W/m}$$

○ Drain formed (W)

$$W = \frac{75.1 \times 3.6}{1998.5} \times 10 = 1.36 \text{kg/h}$$

DRAIN FORMED IN MACHINE

Calculation formula

$$W = 3.6 \times \frac{H}{\gamma} \times S$$

Where:
W: Drain formed (kg/h)
H: Heat exchanging capability (W)
γ: Latent heat of steam (kJ/kg)
S: Safety coefficient (=3)

Carbon Steel Pipes for Ordinary Piping and Pressure Service

JIS G3452 and JIS G3454 provide the following requirements for carbon steel pipe for piping purpose.
Use carbon steel pipe for piping (SGP) for relatively low pressure steam, water, oil, gas and air. Use carbon steel pipe for pressure piping (STPG) for applications with temperature of Max. 350℃.

Size		External diameter (mm)	Carbon steel pipe for piping (SGP) JIS G 3452		Carbon steel pipe for pressure piping (STPG) JIS G 3454					
					Nominal thickness					
					Schedule 40		Schedule 60		Schedule 80	
(A)	(B)		Thickness (mm)	Unit mass excluding socket (kg/m)	Thickness (mm)	Unit mass (kg/m)	Thickness (mm)	Unit mass (kg/m)	Thickness (mm)	Unit mass (kg/m)
6	1/8″	10.5	2.0	0.419	1.7	0.369	2.2	0.450	2.4	0.479
8	1/4″	13.8	2.3	0.652	2.2	0.629	2.4	0.675	3.0	0.799
10	3/8″	17.3	2.3	0.851	2.3	0.851	2.8	1.00	3.2	1.11
15	1/2″	21.7	2.8	1.31	2.8	1.31	3.2	1.46	3.7	1.64
20	3/4″	27.2	2.8	1.68	2.9	1.74	3.4	2.00	3.9	2.24
25	1″	34.0	3.2	2.43	3.4	2.57	3.9	2.89	4.5	3.27
32	1 1/4″	42.7	3.5	3.38	3.6	3.47	4.5	4.24	4.9	4.57
40	1 1/2″	48.6	3.5	3.89	3.7	4.10	4.5	4.89	5.1	5.47
50	2″	60.5	3.8	5.31	3.9	5.44	4.9	6.72	5.5	7.46
65	2 1/2″	76.3	4.2	7.47	5.2	9.12	6.0	10.4	7.0	12.0
80	3″	89.1	4.2	8.79	5.5	11.3	6.6	13.4	7.6	15.3
90	3 1/2″	101.6	4.2	10.1	5.7	13.5	7.0	16.3	8.1	18.7
100	4″	114.3	4.5	12.2	6.0	16.0	7.1	18.8	8.6	22.4
125	5″	139.8	4.5	15.0	6.6	21.7	8.1	26.3	9.5	30.5
150	6″	165.2	5.0	19.8	7.1	27.1	9.3	35.8	11.0	41.8
200	8″	216.3	5.8	30.1	8.2	42.1	10.3	52.3	12.7	63.8
250	10″	267.4	6.6	42.4	9.3	59.2	12.7	79.8	15.1	93.9
300	12″	318.5	6.9	53.0	10.3	78.3	14.3	107	17.4	129
350	14″	355.6	7.9	67.7	11.1	94.3	15.1	127	19.0	158
400	16″	406.4	7.9	77.6	12.7	123	16.7	160	21.4	203

Pressure for hydraulic test (for carbon steel pipe for pressure piping) (MPa)

Schedule No. Sch	10	20	30	40	60	80
Hydraulic test	2.0	3.5	5.0	6.0	9.0	12

Anti-Corrosion Material List

The following table is used for selecting valve material. Please consider conditions of application when selecting valve material.
Rank of corrosion resistance:
A: Excellent B: Good C: Normal (lack of corrosion resistance) D: Bad

Fluid	Stainless 304	Stainless 316	Copper	Bronze	Cast iron and Steel	Neo-plane	NBR	Viton	Teflon
Acethylene	A	A	D	B	A	C	A	A	A
Acetone	B	B	A	A	B	C	D	D	A
Aniline 3%	A	A	B	C	B	C	D	C	A
Amine	A	A	B	A	A	D	—	D	A
Benzoic acid	B	B	B	B	D	D	D	A	A
Ammonia (dense)	A	A	D	D	B	C	D	D	A
Ether	A	A	A	B	A	C	C	A	A
Ethyl alcohol	B	B	B	B	B	A	A	A	A
Ethylene glycol	A	A	B	B	A	A	A	A	A
Zinc chloride 5%	C	B	D	D	D	C	C	A	A
Aluminum chloride	D	C	D	B	D	B	B	A	A
Ammonia chloride	C	C	D	D	C	A	D	A	A
Sulfur chloride	C	B	D	—	D	B	B	—	A
Kalium chloride 1~5%	C	B	C	—	D	A	A	A	A
Calcium chloride	C	C	D	B	C	A	A	A	A
Argentic chloride	D	D	—	—	D	—	—	—	—
Hydrogen chloride (dry)	C	B	D	—	C	—	—	—	—
Hydrogen chloride (wet)	D	C	D	—	D	—	—	—	—
Iron chloride 1%	D	C	D	—	D	A	A	A	A
Iron chloride 5%	D	D	D	—	D	A	A	A	A
Sodium chloride 5%	B	B	B	B	C	A	A	A	A
Sodium chloride 20%	B	B	B	B	C	A	A	A	A
Nickel chloride	C	B	D	D	D	A	A	—	A
Barium chloride 5%	B	B	C	B	C	A	A	A	A
Benzene chloride	A	A	A	—	A	—	—	—	—
Magnesium chloride 5%	B	B	C	B	D	A	A	A	A
Chloromethane gas	B	B	B	—	D	C	C	—	A
Hydrochloric acid	D	D	D	—	D	C	B	—	A
Hydrochloric acid 1%	D	C	D	D	D	B	A	—	A
Hydrochloric acid 5%	D	D	D	—	D	—	—	—	—
Chlorine gas (dry)	D	C	C	C	B	B	B	B	A
Chlorine gas (wet, 100°C)	D	D	D	—	D	C	C	—	A
Chloric acid	D	D	D	—	D	—	—	—	A
Potassium chlorate	B	B	B	B	B	A	A	A	A
Sodium chlorate 10%	B	B	—	B	—	B	A	A	A
Chlorine water	D	C	D	—	D	—	—	—	—
Sea water	B	B	C	B	D	B	A	A	A
Hydrogen peroxide	A	A	C	D	D	D	D	—	A
Potassium permanganate 5%	A	A	A	B	B	B	A	A	A
Gasoline (rough)	A	A	D	B	C	D	C	A	A
Gasoline (refined)	A	A	A	A	A	D	B	A	A
Citric acid 5%	A	A	C	—	D	A	B	—	A

Fluid	Stainless 304	Stainless 316	Copper	Bronze	Cast iron and Steel	Neo-plane	NBR	Viton	Teflon
Creosote (hot)	B	B	C	B	B	B	A	A	A
Chromic acid 5%	C	C	C	—	B	D	D	C	A
Glycerin	A	A	B	B	A	A	A	A	A
Sodium silicate	B	B	B	B	B	A	A	A	A
Acetic acid 5~10%	A	A	D	D	D	D	D	D	A
Acetic acid 20%	A	A	D	D	D	D	D	D	A
Acetic acid 50%	A	A	D	D	D	D	D	D	A
Acetic acid 80%	A	A	D	D	D	D	D	D	A
Allyl acetate	B	B	C	C	B	D	D	—	A
Lead acetate	B	B	—	C	D	A	A	A	A
Sodium acetate (wet)	B	B	B	B	C	B	B	A	A
Butyl acetate	B	B	—	—	D	D	—	—	A
Salicylic acid	B	B	D	C	B	A	A	A	A
Oxygen (cold)	A	A	—	A	B	A	C	A	A
Sodium tripolyphosphate	B	B	D	—	D	—	—	—	—
Kalium cyanide	B	B	D	D	B	A	A	A	A
Sodium cyanide	B	B	D	D	B	A	A	A	A
Carbon tetrachloride (boiled)	C	B	C	D	C	—	—	—	—
Silver bromide	C	B	—	—	D	—	—	—	—
Bromine	D	D	D	B	D	D	D	B	A
Potassium bromate	C	B	B	—	D	—	—	—	—
Tartaric acid 10%	A	A	C	A	D	C	C	A	A
Nitric acid 1%	A	A	D	D	D	—	—	—	—
Nitric acid 5%	A	A	D	D	D	B	C	A	A
Nitric acid 20%	A	A	D	D	D	C	C	A	A
Nitric acid 50%	A	A	D	D	D	D	D	B	A
Nitric acid 85%	B	B	D	D	B	D	D	B	A
Potassium nitrate	B	B	B	B	B	B	A	A	A
Silver nitrate	B	B	—	D	D	C	C	A	A
Sodium nitrate	B	B	B	B	B	C	C	A	A
Potassium hypochlorite	D	C	D	—	D	—	—	—	—
Calcium hypochlorite	C	C	D	—	D	C	C	—	A
Sodium hypochlorite 5%	D	C	D	D	D	C	C	A	A
Sodium hyposulfite	B	B	D	—	D	—	—	—	—
Sodium bicarbonate	B	B	B	B	C	B	A	A	A
Vinegar	A	A	C	B	D	D	D	D	A
Mercury 50°C	C	C	C	D	B	A	A	A	A
Potassium hydrate 5%	B	B	D	D	B	C	C	A	A
Calcium hydrate 5%	B	B	C	A	B	A	A	A	A
Sodium hydrate 5%	B	B	C	A	B	C	C	C	A
Magnesium hydrate	B	B	B	—	B	A	A	—	A
Hydrocyanic acid	B	B	D	D	C	B	—	—	A

Anti-corrosion Materials List/Materials for Critical Parts

Anti-corrosion Materials List/Materials for Critical Parts

Fluid	Stainless 304	Stainless 316	Copper	Bronze	Cast iron and Steel	Neo-plane	NBR	Viton	Teflon
Carbonic acid	B	B	C	D	D	A	A	A	A
Ammonium carbonate	B	B	C	B	B	B	D	B	A
Potassium carbonate	B	B	B	C	B	B	A	A	A
Calcium carbonate	B	B	B	C	B	A	A	A	A
Sodium carbonate 5%	B	B	B	B	B	A	A	A	A
Magnesium carbonate	B	B	—	—	—	—	—	—	—
Dowtherm A (hot)	A	A	D	A	A	D	D	—	A
Turpentine	B	B	B	B	A	B	B	A	A
Kerosene	A	A	A	A	A	B	A	A	A
Naphtha	B	B	B	—	B	—	—	—	—
Sulfur dioxide (wet)	C	B	D	—	D	—	—	—	—
Lactic acid 5%	B	A	D	D	D	C	C	—	A
Lactic acid 10%	B	A	D	D	D	C	C	—	—
Calcium bisulfide	C	B	D	—	D	—	—	—	A
Carbon bisulfide	B	B	D	C	B	B	C	A	A
Picric acid	B	B	D	A	B	C	C	B	A
Hydrogen fluoride (dense)	B	B	D	B	C	A	A	—	A
Sodium fluoride 5%	D	D	D	—	D	D	D	—	A
Fluoric acid	B	B	B	C	—	A	A	A	A
Freon (dry)	B	B	C	D	D	C	—	—	—
Freon (wet)	A	A	A	B	B	B	B	C	A
	C	C	B	—	C	—	—	—	—

Fluid	Stainless 304	Stainless 316	Copper	Bronze	Cast iron and Steel	Neo-plane	NBR	Viton	Teflon
Butane	B	B	—	A	B	B	B	A	A
Propane	B	B	—	A	B	B	A	A	A
Benzene (benzenol)	B	B	B	B	B	D	D	B	A
Alum	B	B	D	C	D	A	A	A	A
Methyl alcohol	B	B	B	B	B	A	A	D	A
Lacquer (hot)	B	B	B	A	D	D	D	A	A
Sulfuric acid 1%	D	D	D	C	D	A	B	A	A
Sulfuric acid 5%	D	D	C	C	D	A	B	A	A
Zinc sulfate 5%	B	B	B	B	C	A	A	A	A
Aluminum sulphate	C	B	D	C	D	A	A	A	A
Ammonia sulfate	C	B	D	B	C	A	A	A	A
Potassium sulfate 1~5%	B	B	B	—	B	A	A	—	A
Calcium sulfate	B	B	B	C	B	A	A	A	A
Copper sulfate 5%	B	B	D	D	D	A	A	A	A
Sodium sulfate	B	B	C	B	D	A	A	A	A
Nickel sulfate (hot)	C	B	D	—	D	A	A	—	A
Barium sulfate	B	B	B	C	B	A	A	A	A
Manganese sulfate	B	B	B	—	B	A	A	—	A
Phosphoric acid 1%	B	B	B	C	C	C	C	A	A
Phosphoric acid 5%	B	B	C	D	D	A	B	A	A
Varnish	A	A	B	A	C	A	C	—	A

Materials for Critical Parts

Material	Abbreviation	Example	Parts	Characteristics
Grey cast iron	FC	FC200	Body	The name comes from the grey-colored sectional plane. Applicable for pressure up to 1.0MPa and temperature up to 220℃.
Spherical graphite cast iron	FCD	FCD450	Body	With spherical graphite, with higher strength and heat resistance than grey cast iron.
Cast iron for high temperature and high pressure	SCPH	SCPH2	Body	For high temperature and high pressure. With high strength and heat resistance.
Carbon steel/forged iron	SF	SF440A	Body	Dense structure, high strength and heat resistance.
Stainless steel/cast steel	SCS	SCS13	Body, Critical parts	Resistant to stain and corrosion. High corrosion resistance, strength, and heat resistance. Ni: 8.0~11.0%, Cr: 18.0~21.0%, C:≦0.8%
Stainless steel (Bar, Strip)	SUS	SUS304	Critical parts	Anti-corrosion, high strength, heat resistant. Ni: 8.0~10.5%, Cr: 18.0~20.0%, C:≦0.08%
	CAC400	SUS316L	Bellows	Ideal for making bellows. Ni: 12.0~15.0%, Cr: 16.0~18.0%, Mo: 2.0~3.0%, C:≦0.03%
Cast bronze	CAC500	CAC406	Body, Critical parts	Also called “gun metal”. Has long been used as material for making valve cock. Highly corrosion resistant and pressure proof. Cu: 83.0~87.0%, Sn: 4.0~6.0%, Zn: 4.0~6.0%, Pb: 4.0~6.0%
Phosphor bronze cast		CAC502	Critical parts	Corrosion resistant, durable. Cu: 87.0~91.0%, Sn: 9.0~12.0%, P: 0.05~0.2%
Phosphor bronze plate		C5212P	Bellows	Ductible, durable, corrosion resistant. Sn: 7.0~0.9%, P: 0.03~0.35%, Cu+Sn+P: ≧99.5%
Copper for forging		C3771	Body	Corrosion resistant, pressure proof. Cu: 57.0~61.0%, Pb: 1.0~2.5%,Fe+Sn: ≦1.0%, remnant: Zn
Free-cutting copper		C3604	Critical parts	Good cutability, wearing resistant. Cu: 57.0~61.0%, Pb: 1.8~3.7%, Fe:≦0.5%, Fe+Sn: ≦1.2%, remnant: Zn
Chloroprene rubber (Synthesized rubber)	CR	——	Disc, etc.	A product of Showa Neoplane.
Nitrile rubber (Synthesized rubber)	NBR	——	Disc, etc.	Nitrile rubber is its general name.
Fluorine-contained rubber (Synthesized rubber)	FKM	——	Disc, etc.	A product of DuPont.
Polytetrafluoroethylene (Synthesized resin)	PTFE	——	Disc, etc.	A product of DuPont.
Remark	Critical parts: disc, seat, etc. main parts of valve. Fe (iron: main ingredient of cast iron and cast steel), C(carbon), Ni (Nickle), Cr (chromium), Mo (molybdenum), Cu (copper), Sn (tin), Zn (zink), Pb (plumbum), P (phosphor)			

Code Name

■ ABOUT NEW CODE NAME

We have been using combinations of alphabets and numbers as the model names of our products. To differentiate products with the same model name but made of different materials, we have introduced 3-digit specification code to demonstrate materials and important specifications. However, this code was proved not effective enough for differentiation purpose. This is why we have introduced a new code name system recently.

This new product code system is developed to comply with the recent trend of computerized coding system. According to this system, each product is expressed using a 31-digit code.

The first 17 digits of the code are called the product code, which demonstrates model, material and important specifications. The other digits include size code and selection code for options (there are blank digits in the code).

Using product code, it is possible to differentiate most products that are made of different materials and with different specifications.
Please use product code when ordering products.

■ ABOUT NEW CODE NAME

The new product code includes the following:

(For example) RP6-B

Model classification	Model No.	Hyphen	Spec. Code
RP	6	—	B

The Model Classification and Model No. are basically the same as those in the old coding system.
The Spec. Code includes material, structure, shape, spring type, fluid, set value, inventory mark, etc.
Examples: pressure reducing valve (material, spring type etc.), safety valve (shape, material, spring type etc.), temperature regulating valve (material, fluid for heating etc.), solenoid valve (material, action etc.)

Digits of product code: Maximum 17 digits. In the case the number of digits is less than 17, it will be truncated.

Material code: 1 alphabet in product code.

Material code	Body material	Material for critical parts	Valve disc material
F	CAC	CAC	
J	CAC	SUS	
W	CAC	SUS	PTFE
B	FC	CAC	
R	FC	CAC	PTFE
H	FC	CAC	Sythetic rubber
G	FC	SUS	
S	FC	SUS	PTFE
L	FCD	CAC	
M	FCD	SUS	
C	SCPH	SUS	

Material code	Body material	Material for critical parts	Valve disc material
T	SCPH	SUS	PTFE
D	SCS13	SUS	
V	SCS13	SUS	PTFE
K	SCS14	SUS316	
E	SCS14	SUS316	PTFE
N	Carbon steel	SUS	
P	Resin	Resin	
A	Aluminium alloy or Plumbite alloy		
X	Resin concrete		
Q	Cement concrete		

FC: Grey cast iron, FCD: Ductile cast iron, SCPH: Cast steel /Carbon steel, Mild steel: other carbon steels
SUS: stainless steel, SCS13/SCS14: stainless cast steel, CAC: cast bronze, PTFE: polytetrafluoroethylene (Teflon)

※ 1.Exceptions can be seen in some products.
※ 2.The code for "material of body + critical parts" also include materials of other groups.

CORPORATE HISTORY

Nov.1950
Established Fushiman Valve Seisakusho in Iwate-Pref. to start production and sales of automatic control valves to use for steam, air water and etc.

Aug. 1952
Established Tokyo Testing Works in Yaguchi, Tokyo.

Aug. 1958
Authorized by JIS to indicate the certificate No.JIS B8402

Dec.1960
Established Fuji Denso Works for production of Solenoid Valves.

May.1963
Corporate name changed to K.K.Fushiman Valve.

Jun.1970
Corporate name changed to Venn Co.,Ltd.

Apr.1973
Established Technical Center in Yokohama.

Jun.1980
Authorized by JIS to indicate the certificate No.JIS B8410.

Apr.1983
Authorized by JIS to indicate the certificate No.JIS B8414.

Apr.1990
Represented sales of German IWK and French COMAP products.

Oct.1990
Technical Center moved to Iwaki, Fukushima, and re-named as ITC(Iwaki Technical Center)

Feb.1996
Increased the capital to 384 mil.yen.

Apr.1997
Merged Fuji Denso Works, and increased the capital to 449 mil.yen.

Oct.1999
Iwate Works acquired the certificate of ISO 9001.

Apr. 2003
Represented sales of STUDOR products(Air admittance valves).

Apr.2005
Cooperation with JRG (Swiss, currently Georg Fischer JRG AG) on sales and technology.

VENN CO., LTD.

2-13, Tamagawa 2-chome , Ohta-ku, Tokyo, 146-0095 Japan
TEL: +81-3-3759-0178
FAX: +81-3-3759-1414
http: //www. venn. co. jp

TOTAL INDEX 2

A

STEAM TRAPS
AD-17,17F ····· 148
AD-18,18F ····· 149
AF-11H ····· 157
AF-11HF ····· 158
AF-12 ····· 154
AF-15F ····· 155
AF-16F ····· 156
AF-20F ····· 159
AK-1H ····· 150
AK-2H ····· 151
AK-5,5F ····· 152
AK-16 ····· 158
AT-1A,1S ····· 142
AT-4A,4S ····· 143
AT-6,6F ····· 146
AT-6FB ····· 147
ATB-5,5F ····· 144

AIR TRAP
AK-21 ····· 162

AIR VENT VALVES
AF-4CN,4M,4S ····· 168
AF-5N ····· 169
AF-6N ····· 170
AF-9,9H ····· 172
AF-10,10H ····· 172
AF-17N ····· 171

B

DRAIN SEPARATOR
BA-5 ····· 160

MOTOR VALVES(ball-type)
BM-1S ····· 259
BM-7S ····· 258
BM-9S ····· 257
BM-9SR ····· 257
BM-12S,13S,14S ···· 254
BM-12CR,13CR,14CR ··· 256
BM-12SR,13SR,14SR ··· 255

SILENCER (for steam trap)
BH-1 ····· 147

SIGHT GLASS
BS-1,1A ····· 163
BS-2,2A ····· 163

C

CYLINDER VALVES
CCF,COF-1 ····· 271
CCF,COF-1H ····· 271
CCS,COS-1 ····· 270
CCS,COS-1H ····· 270
CP53-FS ····· 272
CP85-FS ····· 272
CP125-FS ····· 272

D

PILOT SOLENOID VALVES for LEVEL CONTROL VALVES
DS-11N,11LN ····· 126

SOLENOID VALVES
DS-10,10H,12 ····· 232
DS-13,13H,14 ····· 233

E

SOLENOID VALVES
ED-S,F ····· 236

EMERGENCY SHUT-OFF VALVES (SOLENOID TYPE)
EBF,ECF-1P ····· 249
EBF,ECF-1W ····· 248
EBS,ECS-1P ····· 249
EBS,ECS-1W ····· 248
EI-FS,FP ····· 250
EIE-FS,FP ····· 251

F

DIFFERENTIAL PRESSURE-ADJUSTING VALVES (CIRCUIT VALVE)
FD-2H,2W ····· 105

G

H

I

J

BELLOWS TYPE EXPANSION JOINTS
JB-13,14 ····· 174
JB-15,16 ····· 176
JB-17,18 ····· 178
JB-21,22 ····· 175
JB-23,24 ····· 177

SLEEVE TYPE EXPANSION JOINTS
JS-5HF,6HF ····· 182
JS-7HF,8HF ····· 182
JS-5HW,6HW ····· 183
JS-7HW,8HW ····· 183

BALL JOINTS
JU-1 ····· 186
JU-3F,4F ····· 187
JU-3W,4W ····· 187

K

STRAINERS
KT-1,1A,1D ····· 200
KT-1PN,1CN ····· 201
KT-2,2D ····· 202
KT-3,3A ····· 203
KT-4W,4H ····· 204
KT-5,5F ····· 205
KU-1,1CN ····· 207
KU-2,2A ····· 208
KU-3 ····· 209
KU-4 ····· 209
KW-1 ····· 210
KW-2 ····· 211
KY-3 ····· 198
KY-4,4N ····· 194
KY-6,6CN ····· 196
KY-7 ····· 195
KY-8 ····· 197
KY-9 ····· 199
KY-10 ····· 199

L

BALL TAP for LEVEL CONTROL VALVES
LB-2N ····· 127

LEVEL CONTROL VALVES
LP-8AN,8AHN ····· 121
LP-8ARN ····· 121
LP-8N,9N ····· 118
LP-8HN,9HN ····· 119
LP-8RN,9RN ····· 120

M

PRIMARY PRESSURE REGULATING VALVES
MD-1A ····· 112
MD-2P ····· 113
MD-14CN,14H,14W ··· 98
MD-20H,20W ····· 104
MD-22 ····· 115
MD-35F,37F ····· 102

MOTOR VALVES
ML-FD ····· 261
ML-FS ····· 262
ML-FW ····· 263
ML-TS ····· 262

N

O

P

SOLENOID VALVES
PF-16 ····· 226
PF-17 ····· 226
PF-22,22C ····· 221
PF-25,25C ····· 224
PS-16 ····· 226
PS-17 ····· 226
PS-22,22C ····· 220
PS-22K,22CK ····· 228
PS-23,23C ····· 222
PS-25,25C ····· 224
PSE-18,18A ····· 240

Q

NOISELESS HEATERS
QH-1 ····· 136
QH-2 ····· 137
QH-3 ····· 138

R

PRESSURE REDUCING VALVES
RD-3H,3HF ····· 31
RD-3HA,3HAF ····· 31
RD-7 ····· 56
RD-14CN,14H,14W ····· 46
RD-16 ····· 53
RD-17,17A ····· 54
RD-20 ····· 58
RD-20F ····· 58
RD-29A,29B ····· 33
RD-30 ····· 30
RD-31N,31FN ····· 36
RD-32N,32FN ····· 37
RD-33FN ····· 36
RD-34FN ····· 37
RD-35,35F ····· 38
RD-36,36F ····· 38
RD-37,37F ····· 39
RD-38,38F ····· 39
RD-40 ····· 28
RD-41,41F ····· 28
RD-43N ····· 44
RD-44N ····· 43
RD-47N ····· 45

RP-6,6P ····· 12
RP-6A ····· 18
RP-6BD ····· 14
RP-7 ····· 27
RP-8 ····· 13
RP-8A ····· 19
RP-9,10,11 ····· 16
RP-9A,10A,11A ····· 21

S

SAFETY VALVES (FULL BORE TYPE)
SF-1H,2H ····· 78
SF-13,13L ····· 79
SF-14,14L ····· 79
SF-15,15L ····· 80
SF-16,16L ····· 80
SF-17,17L ····· 81
SF-18,18L ····· 81
SF-19,19L ····· 82
SF-20,20L ····· 82
SAFETY VALVES (LIFT TYPE)
SL-7,8 ····· 69
SL-9,10 ····· 70
SL-11,12 ····· 71
SL-23,23H ····· 67
SL-24,24H ····· 67
SL-45,46 ····· 68
SAFETY RELIEF VALVES (LIFT TYPE)
SL-37,37V ····· 62
SL-38,38V ····· 62
SL-39,39V,40,40V ····· 63
SL-39F,39FV,40F,40FV ··· 64
SL-43,43V ····· 66
SL-44,44V ····· 66
RELIEF VALVES
SL-6ED ····· 75
SL-8ED ····· 74
SL-10ED ····· 74
SL-24E ····· 73
SL-38E ····· 72
SL-40E ····· 72
SL-44E ····· 73
SL-46ED ····· 75

T

TERMINAL BOX (for SOLENOID VALVE)
TB-03 ····· 244
TEMPERATURE REGULATING VALVES
TD-2,2L ····· 131
TD-2A,2AL ····· 131
TD-4,4L ····· 134
TD-8 ····· 130
TD-8A ····· 130
TEMPERATURE REGULATING MOTOR VALVES
TBM-8S ····· 266
TEMPERATURE REGULATING SOLENOID VALVES
TPF,TPS-22 ····· 242

U

V

VACUUM BREAKERS
VD-1H ····· 139
VD-2N ····· 127
VD-5N ····· 128
SOLENOID VALVES
VF-13,13C ····· 229
VF-14,14C ····· 229

W

SOLENOID VALVES
WF-22,22C ····· 215
WF-25,25C ····· 218
WS-22,22C ····· 214
WS-22K,22CK ····· 228
WS-23,23C ····· 216
WS-25,25C ····· 218
WSE-18,18A ····· 239
WVE-02 ····· 231
PILOT SOLENOID VALVES for LEVEL CONTROL VALVES
WS-22,22C ····· 126
WATER HAMMER ARRESTOR
WHA-3 ····· 57
PRESSURE REDUCING VALVES
WVR-02,02CN ····· 50
PRIMARY PRESSURE REGULATING VALVES
WVM-02,02CN ····· 99
LEVEL CONTROL VALVES
WVL-02,02CN ····· 123

X

Y

Z

Others

MOTOR VALVES
3BM-1S ····· 260

TOTAL INDEX

1 PRESSURE REDUCING VALVES *for Steam for Air and Gas*

2 PRESSURE REDUCING VALVES *for Water and Liquids*
WATER HAMMER ARRESTOR

3 SAFETY VALVES, RELIEF VALVES

4 CIRCUIT VALVES
PRIMARY PRESSURE REGULATING VALVES

5 LEVEL CONTROL VALVES
VACUUM BREAKER

6 TEMPERATURE REGULATING VALVES

7 NOISELESS HEATERS
VACUUM BREAKER

8 STEAM TRAPS AIR TRAP
DRAIN SEPARATOR SIGHT GLASS
SILENCER *for Steam trap*

9 AIR VENT VALVES

10 EXPANSION JOINTS
BALL JOINTS

11 STRAINERS

12 SOLENOID VALVES

13 EMERGENCY SHUT-OFF VALVES

14 MOTOR VALVES

15 CYLINDER VALVES

16 REFERENCE DATA

VENN CO., LTD.

Main Office

2-13, Tamagawa 2-chome , Ohta-ku, Tokyo, 146-0095 Japan
TEL: +81-3-3759-0178
FAX: +81-3-3759-1414
http: //www. venn. co. jp